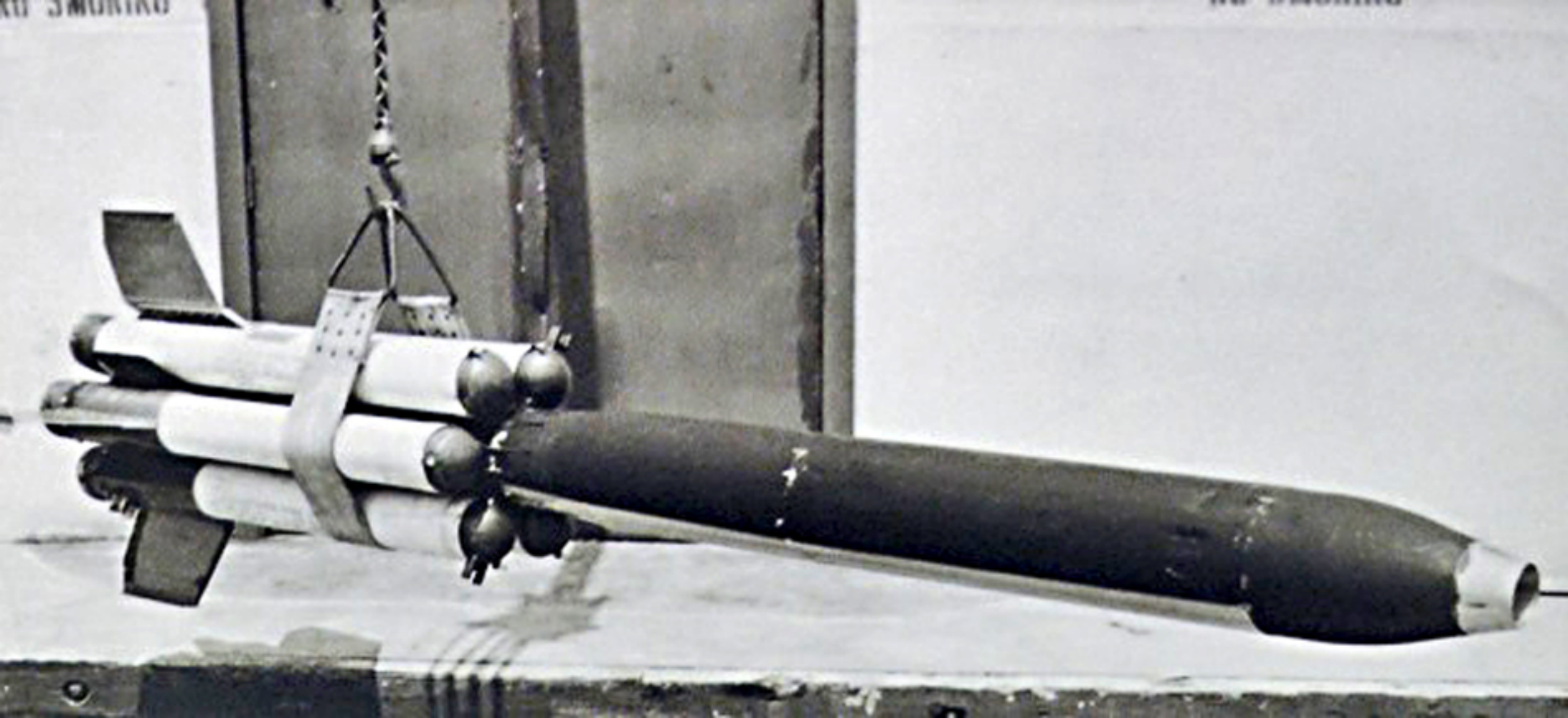

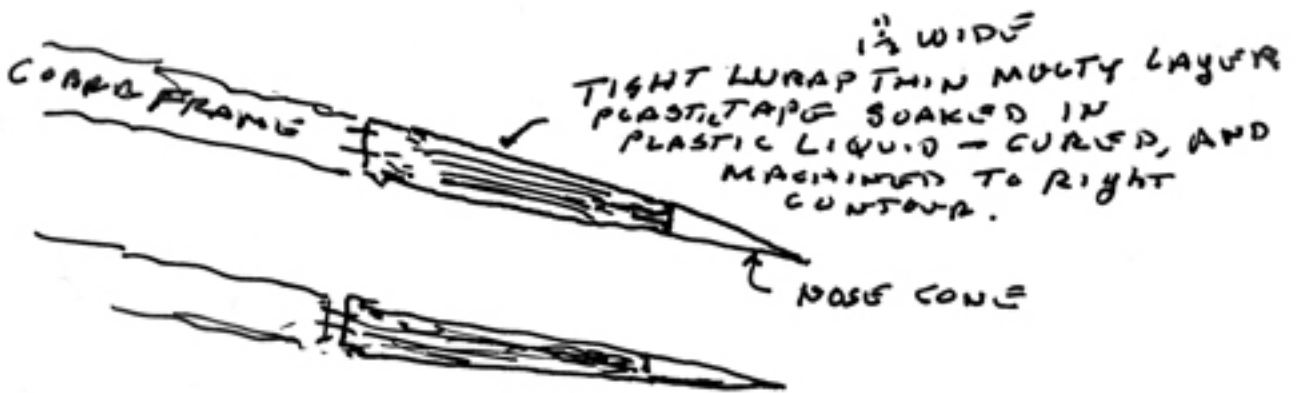
1½" WIDE
TIGHT WRAP THIN MULTY LAYER PLASTIC TAPE SOAKED IN PLASTIC LIQUID — CURED, AND MACHINED TO RIGHT CONTOUR.
CORE FRAME
NOSE CONE

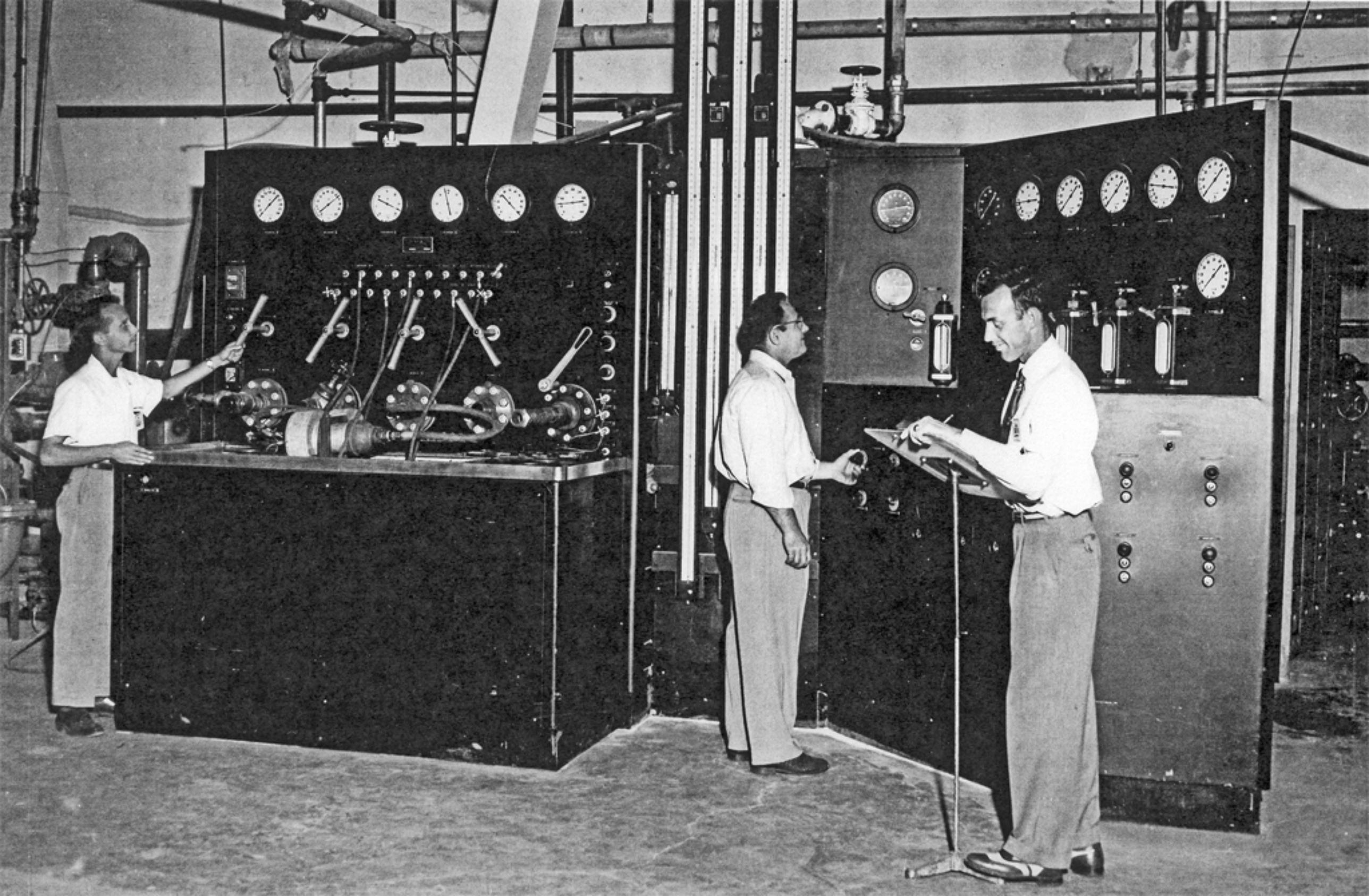

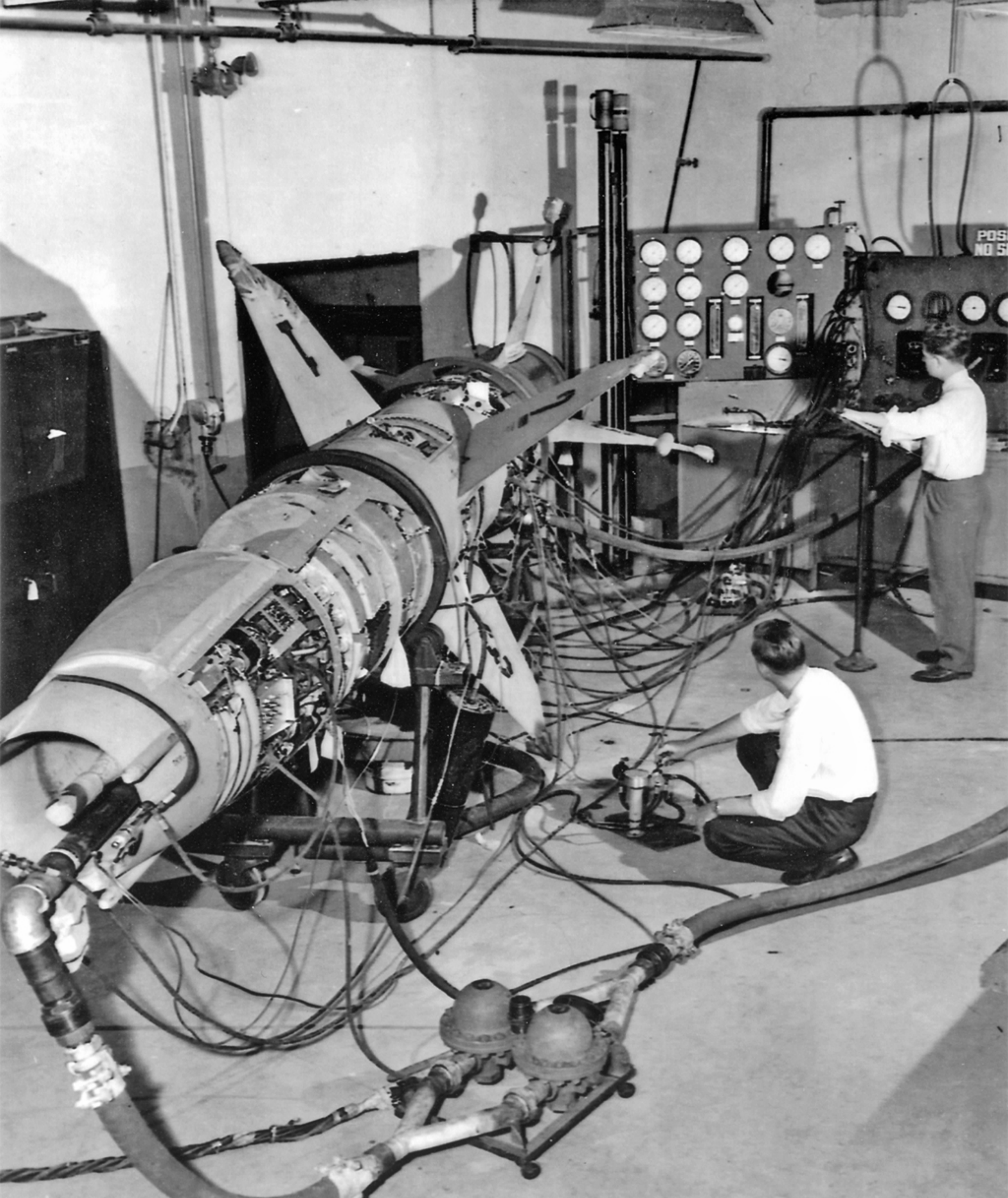

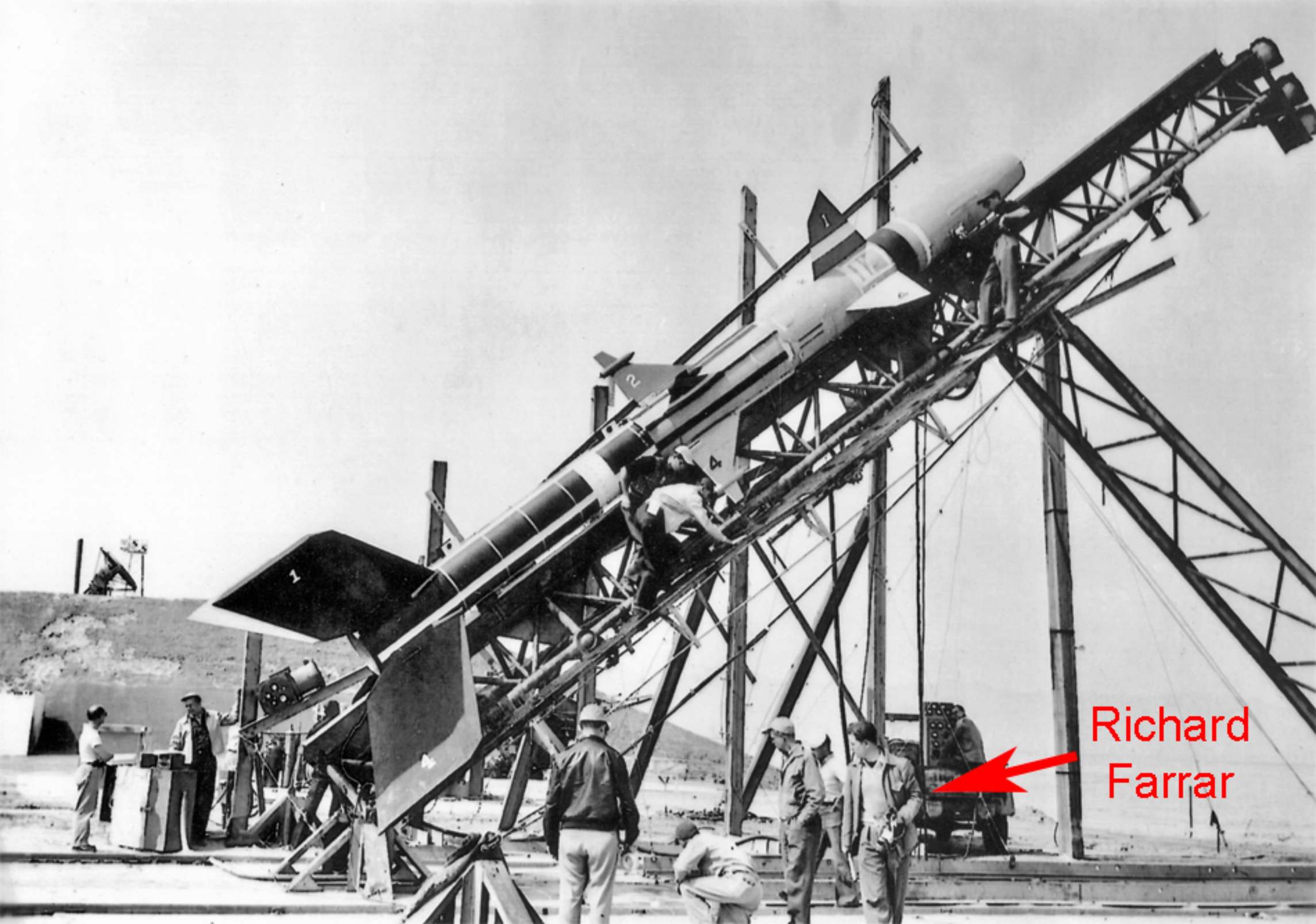
Richard
Farrar

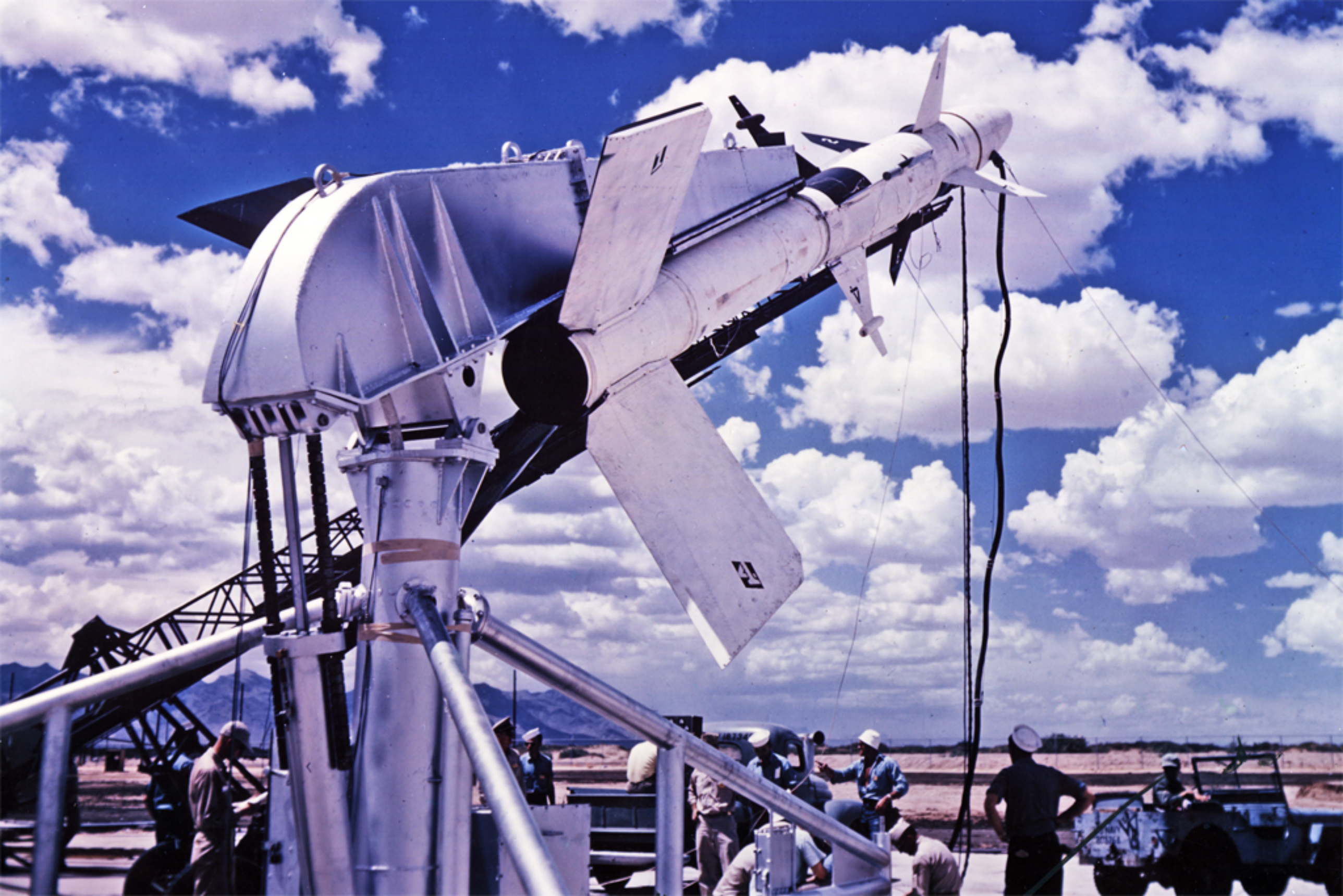

BENDIX AVIATION CORPORATION

BENDIX PRODUCTS DIVISION MISSILES

MISHAWAKA, INDIANA

Because Bendix is more deeply rooted in all the fields of which systems are comprised, Bendix is better able to produce completely **DEPENDABLE SYSTEMS**

ram jet engine systems

missile hydraulic system

RESEARCH

DESIGN

DEVELOPMENT

MANUFACTURING

Fuel System Test Lab
Bendix - Mishawaka, IN

MISSILE S/N E 982

DATE: 10 DECEMBER 1965

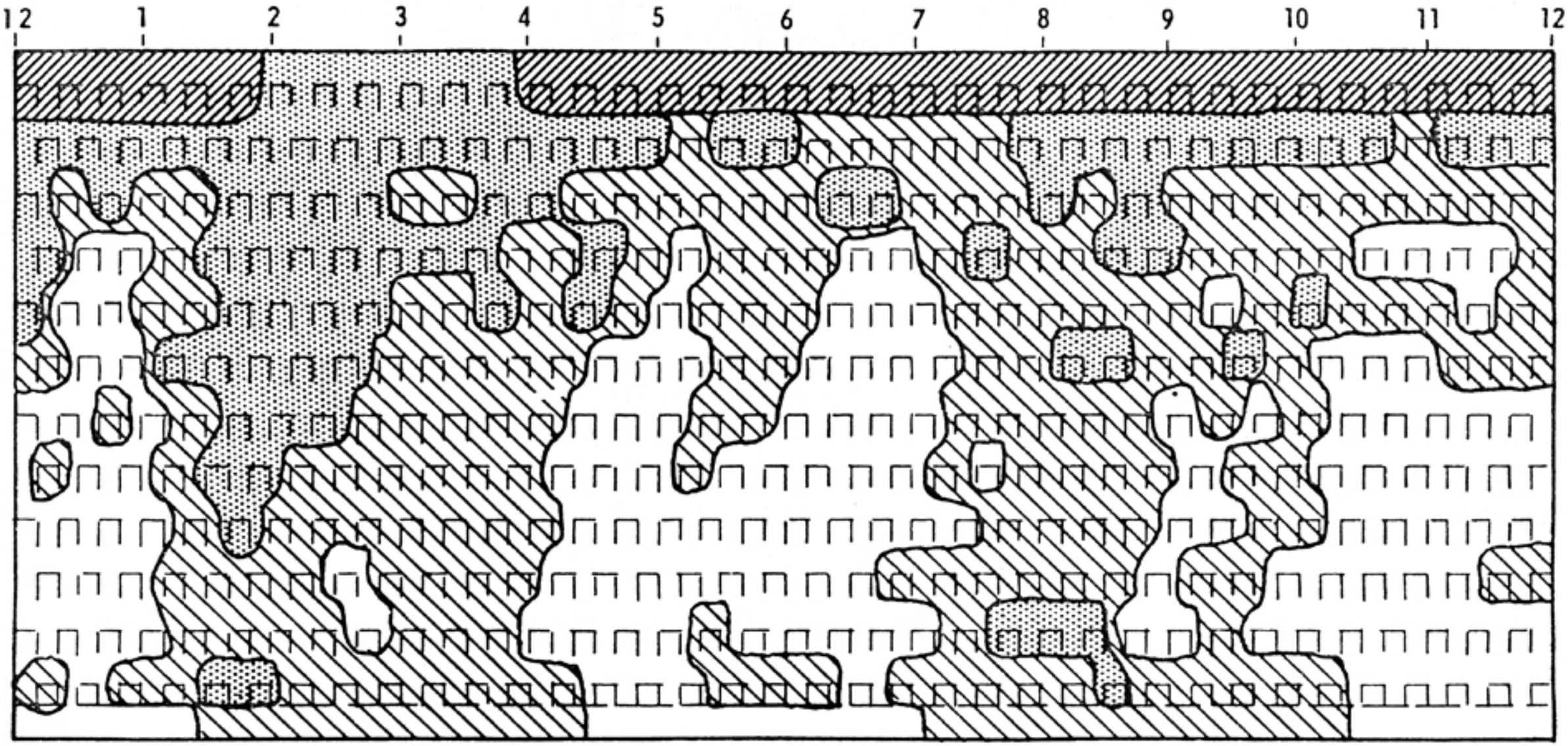

FIGURE 9. COOLING SHROUD TEMPERATURE PAINT PATTERN

June 11, 1963 W. E. WORLEY ETAL 3,092,960

FUEL CONTROL SYSTEM FOR RAMJET ENGINE

Filed April 10, 1958 5 Sheets-Sheet 1

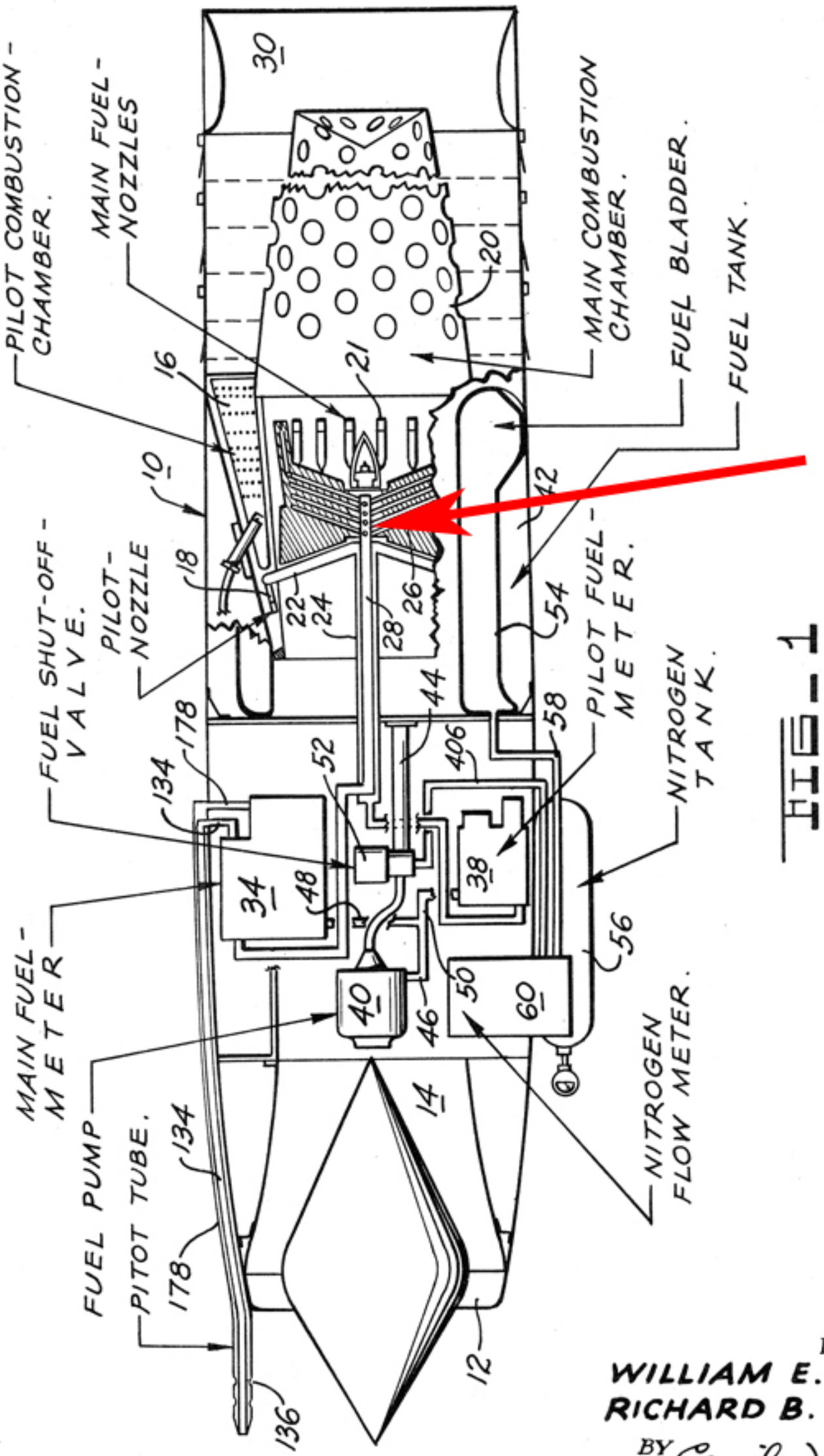

Fuel Control Valve

FIG - 1

INVENTORS
WILLIAM E. WORLEY.
RICHARD B. FARRAR.
BY Cecil Arens
ATTORNEY.

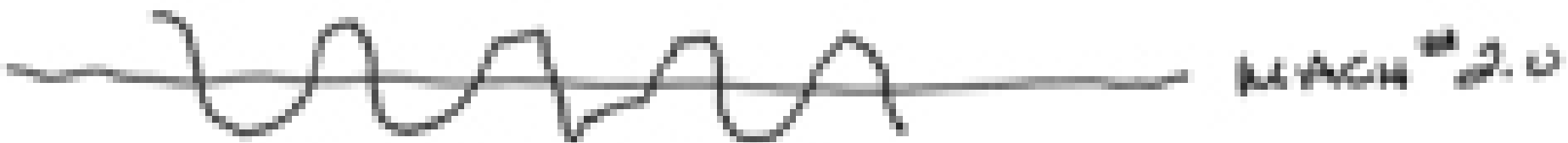

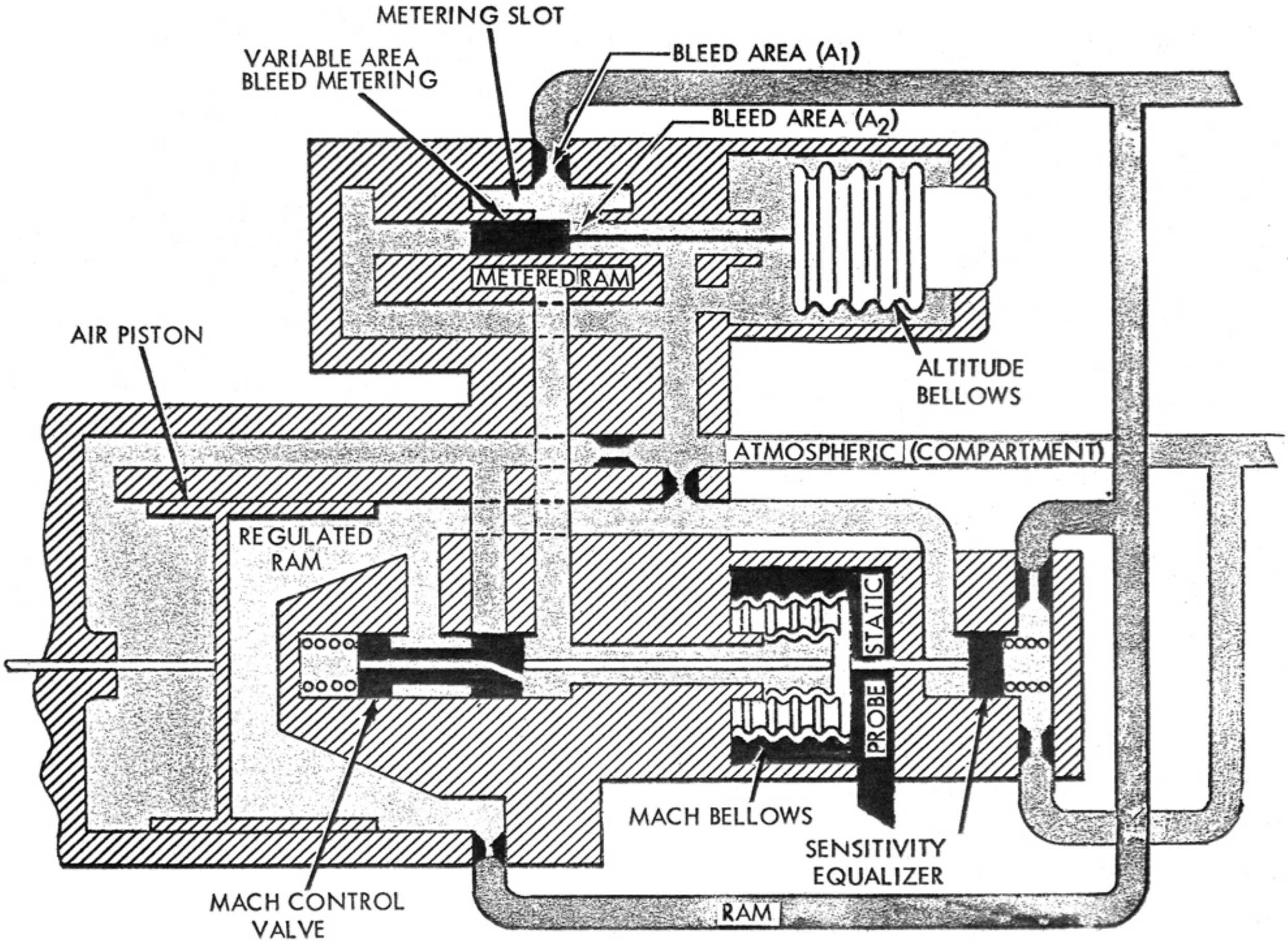

ALTITUDE PROGRAMMED MACH NO. CONTROL CIRCUIT SCHEMATIC DIAGRAM

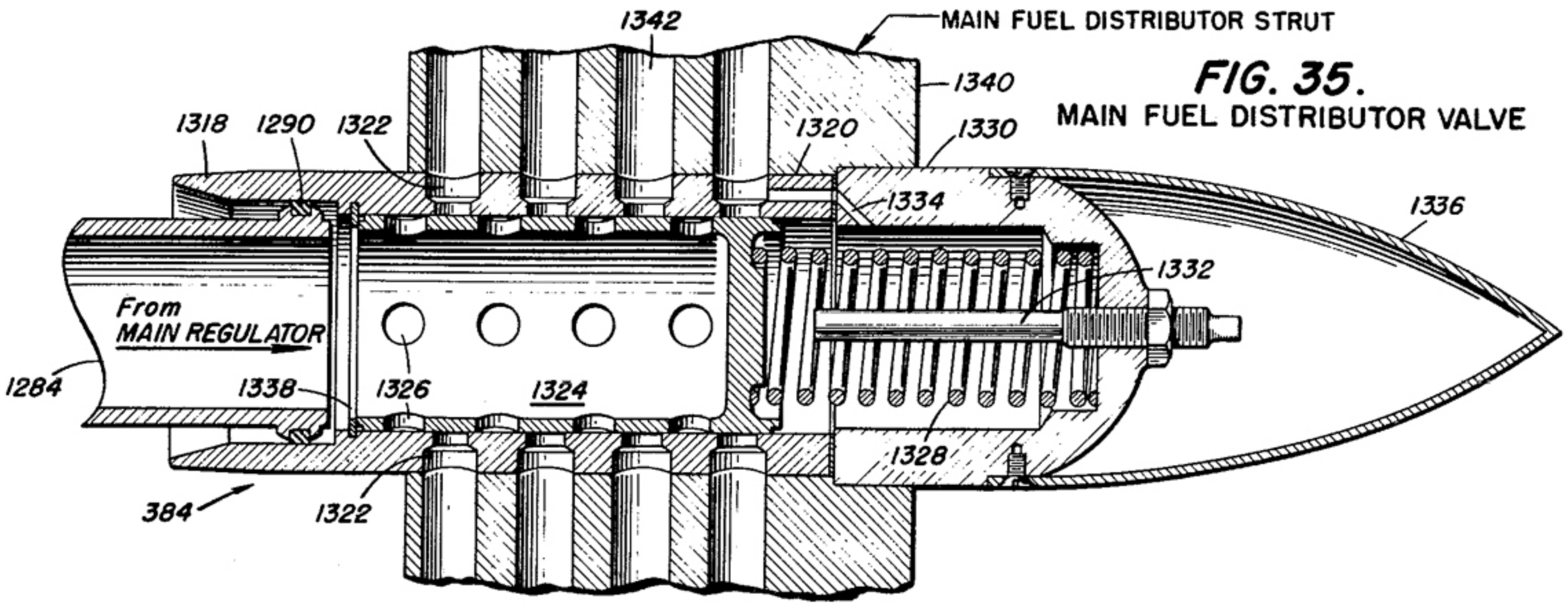

FIG. 35.
MAIN FUEL DISTRIBUTOR VALVE

Ordinance Aerophysics Laboratory -- Dangerfield TX

Altitude Cell Installation
TALOS Free-Jet Durability Test

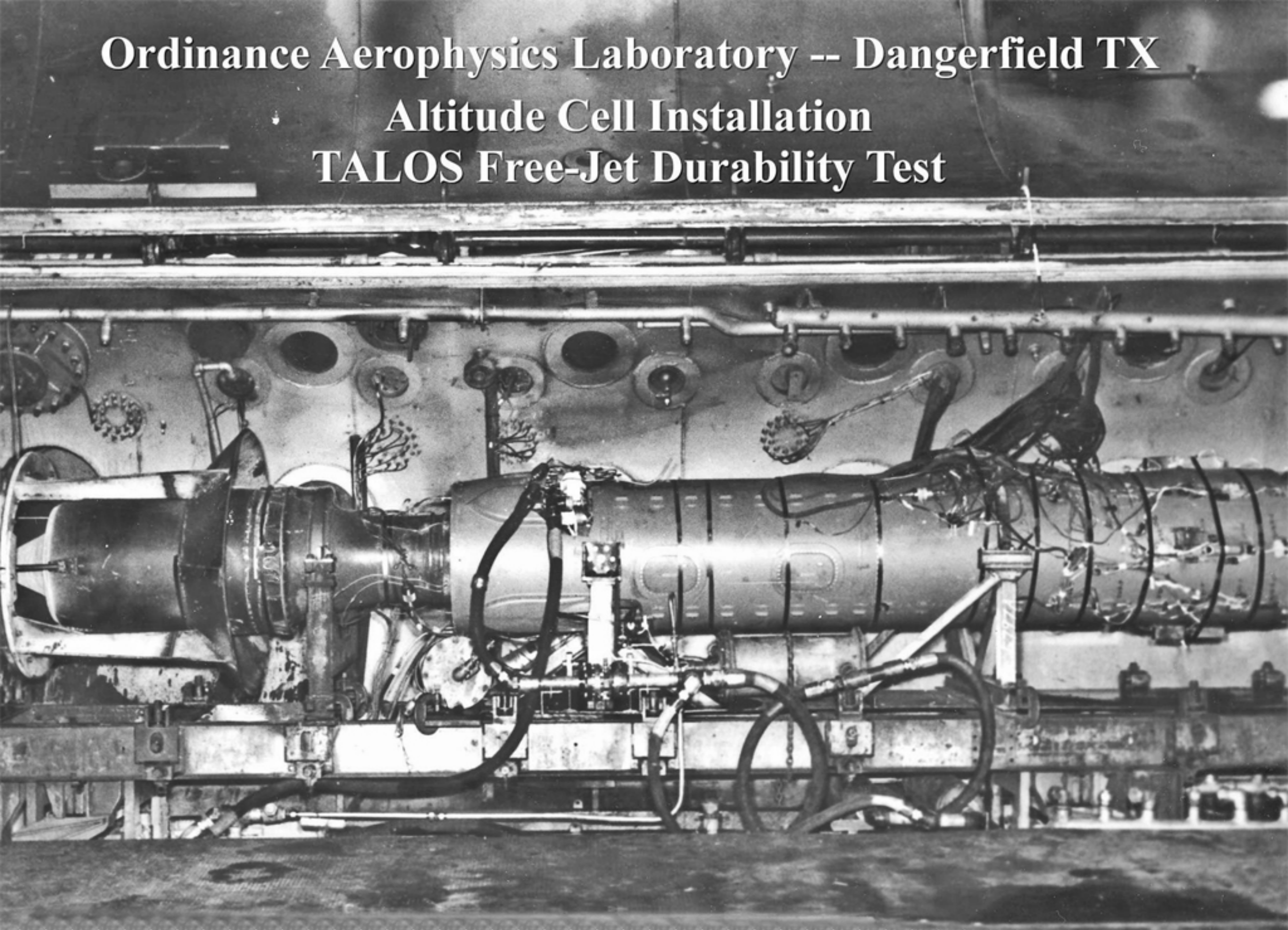

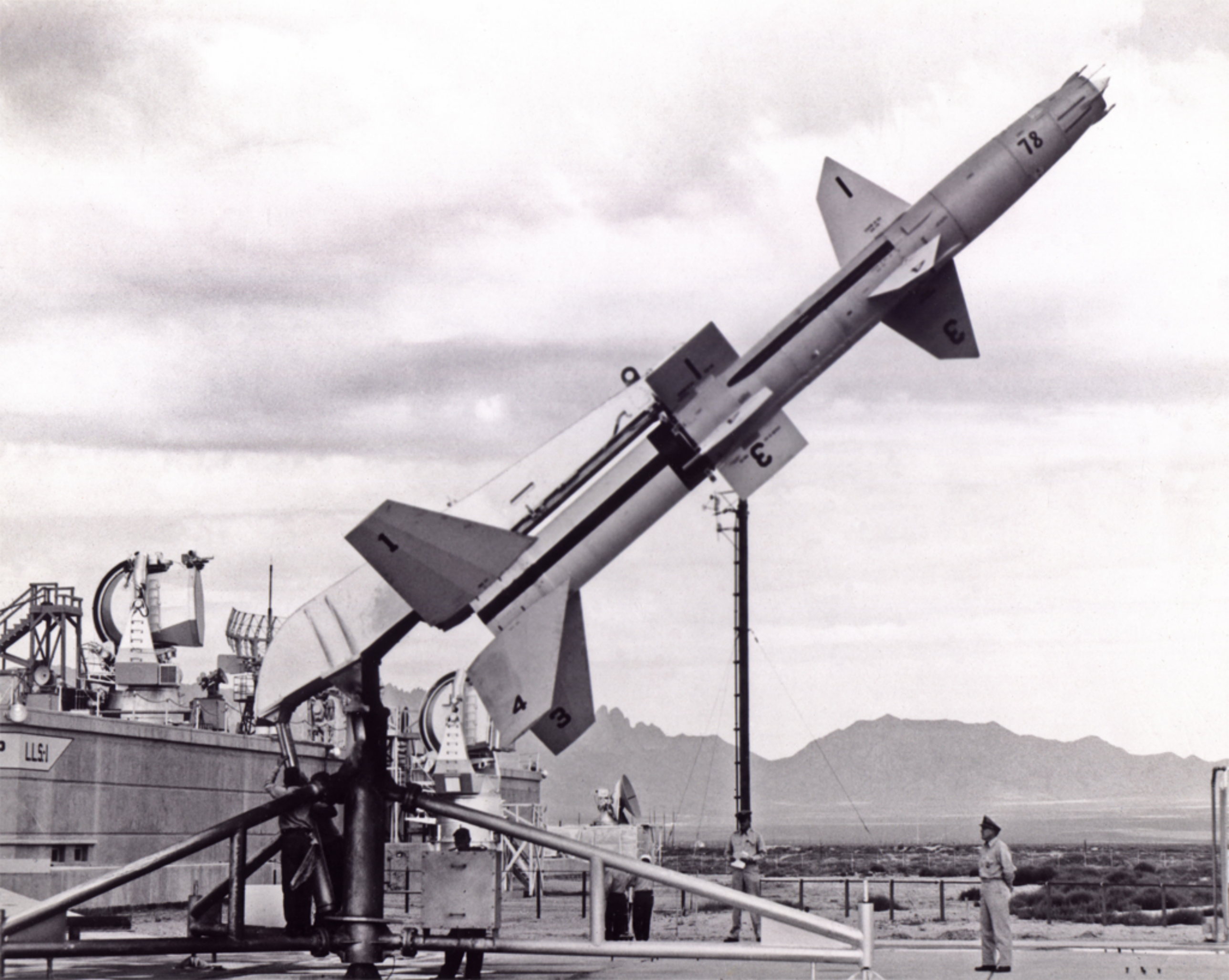
78
1
3
1
3
1
4
3
LLSI

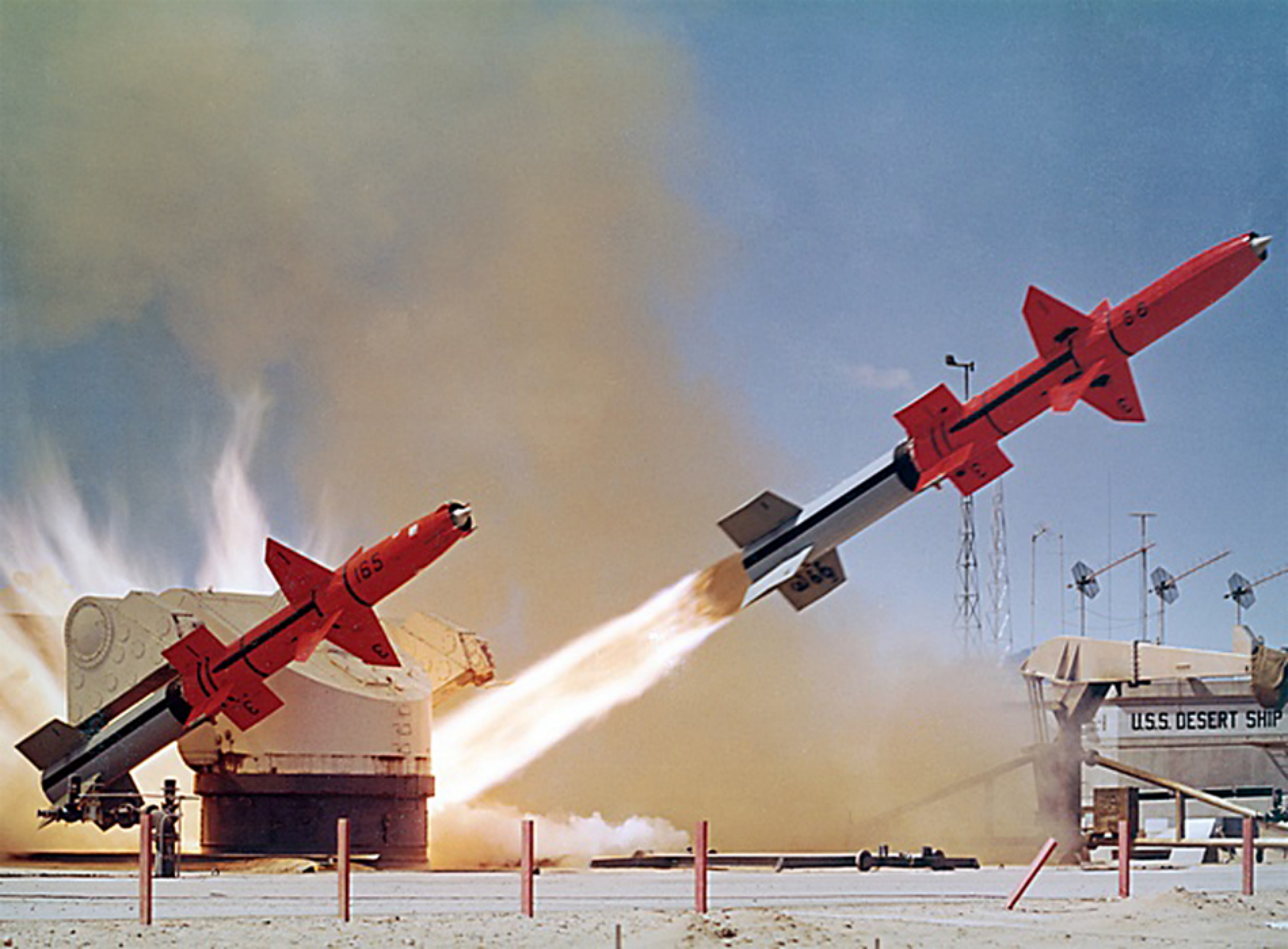
165
U.S.S. DESERT SHIP

TALOS Assmebly Floor
Mishawaka, IN

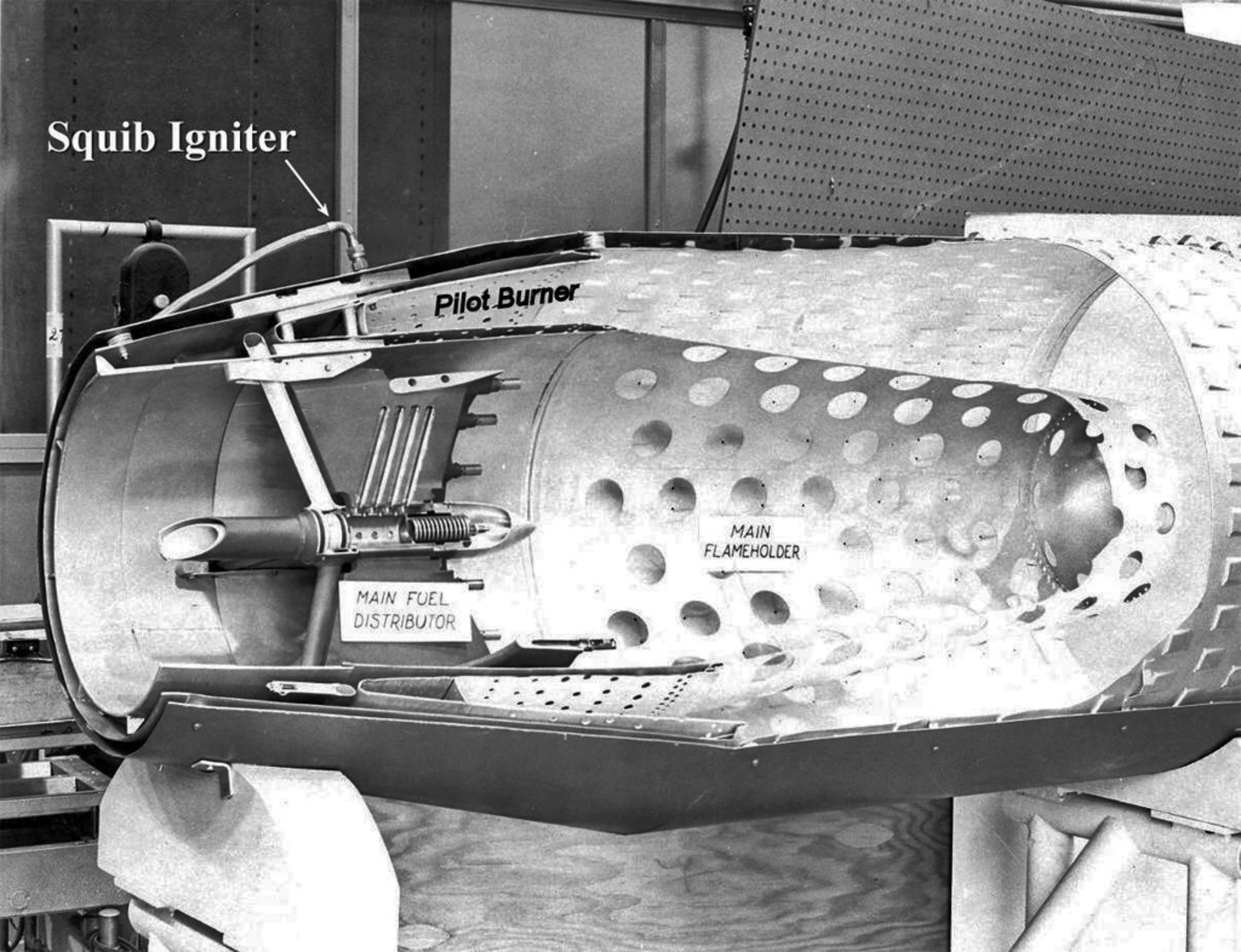
Squib Igniter
Pilot Burner
MAIN FUEL DISTRIBUTOR
MAIN FLAMEHOLDER

Talos Combuster

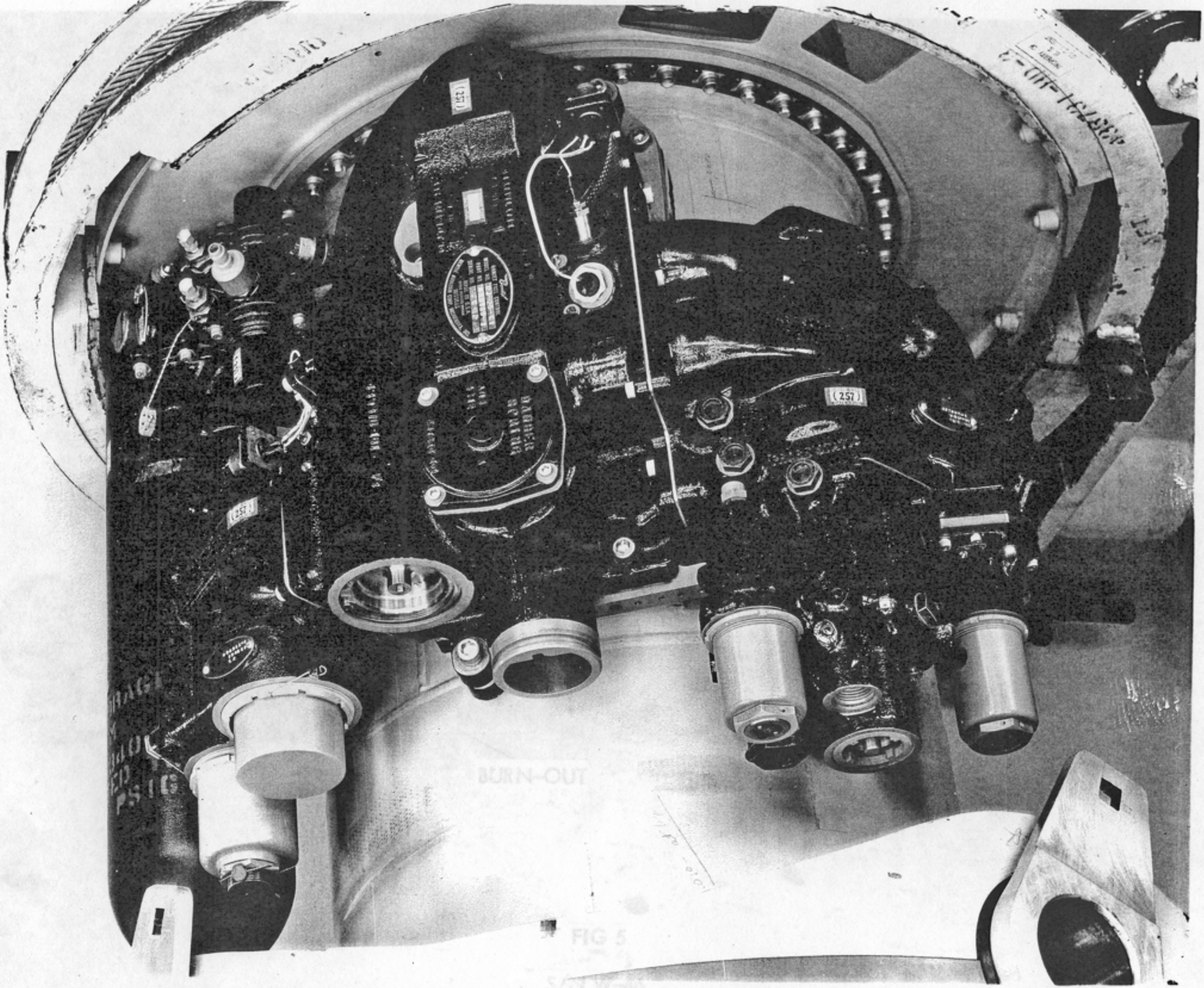

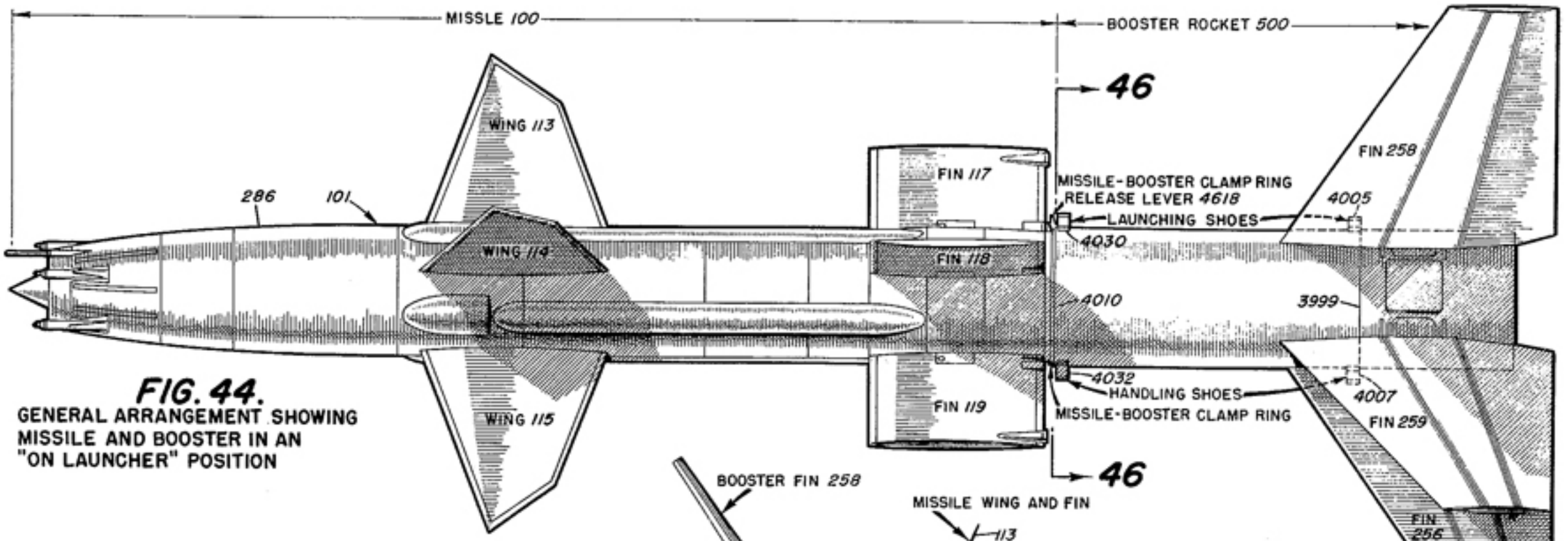

FIG. 44.
GENERAL ARRANGEMENT SHOWING MISSILE AND BOOSTER IN AN "ON LAUNCHER" POSITION

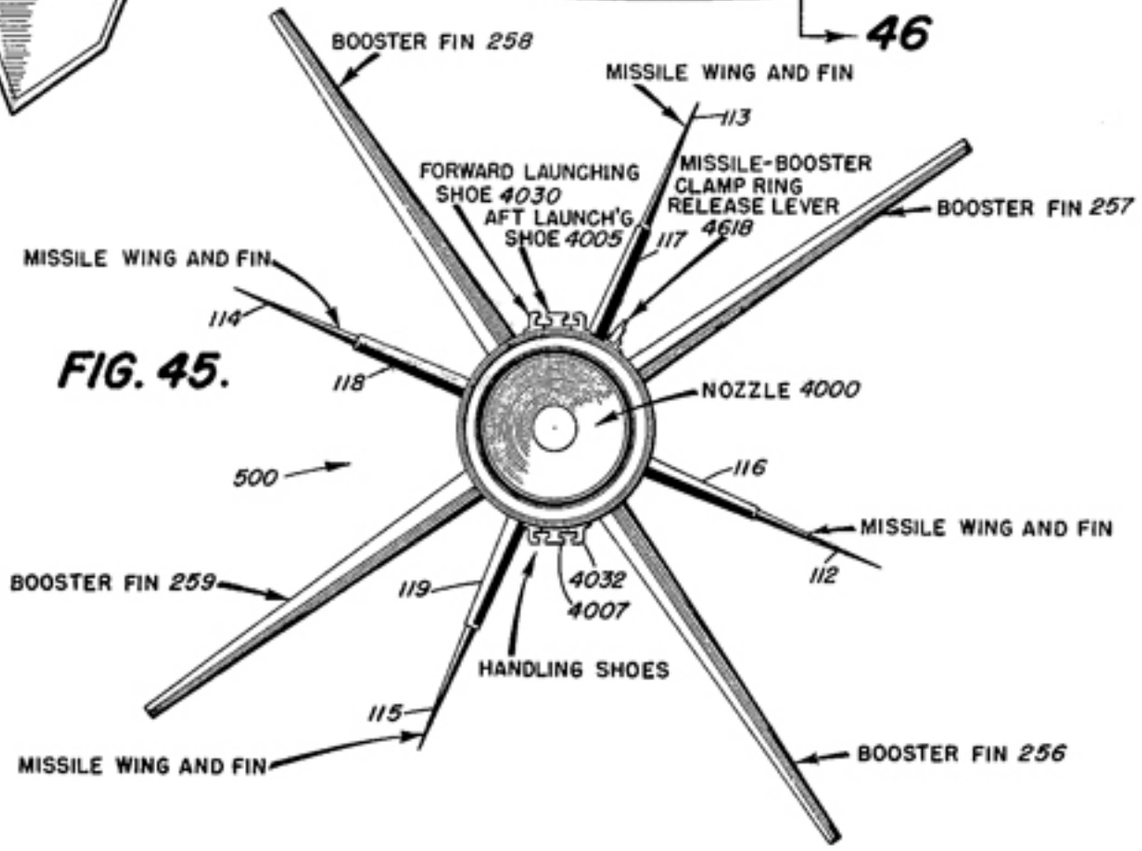

FIG. 45.

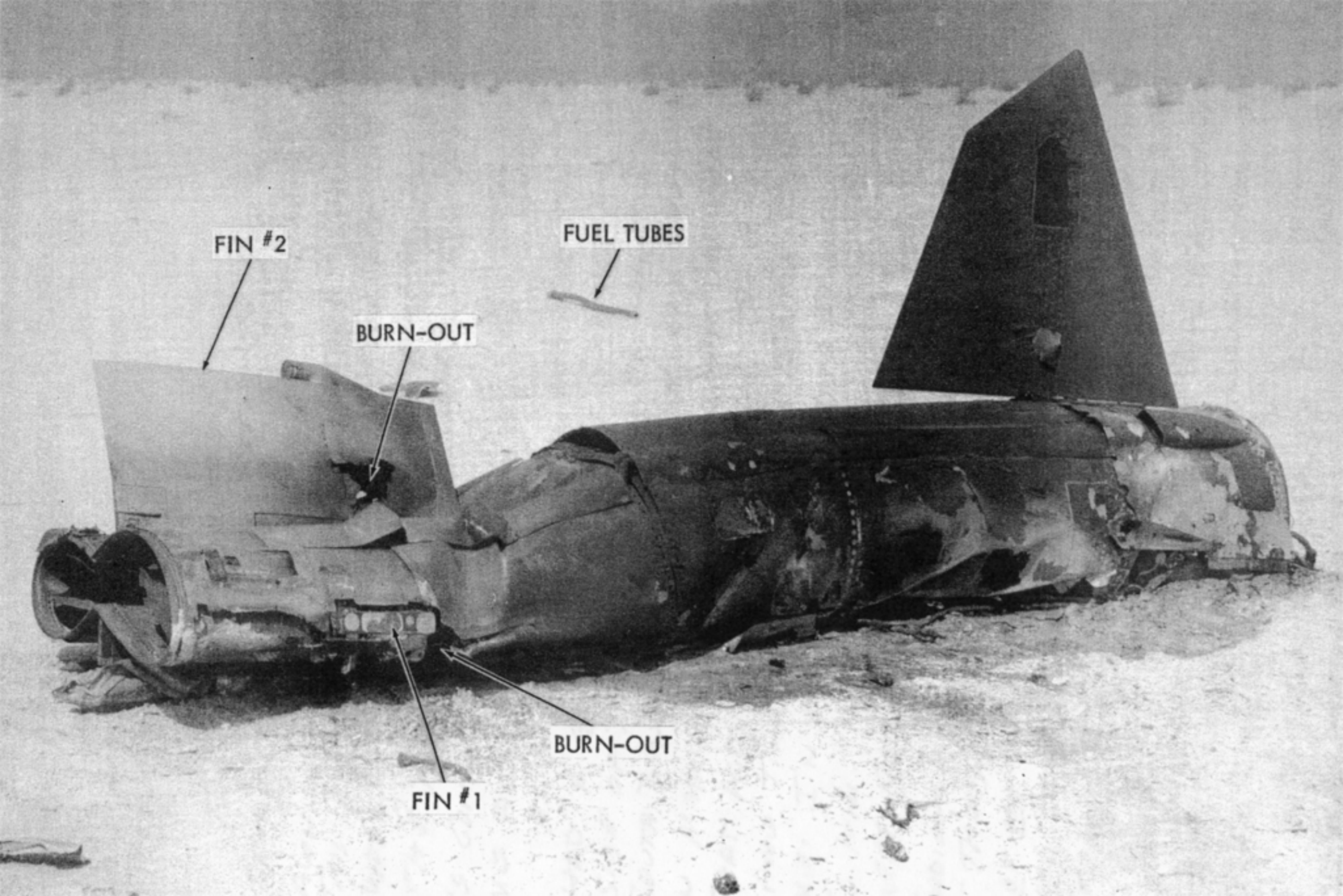
FIN #2
FUEL TUBES
BURN-OUT
BURN-OUT
FIN #1

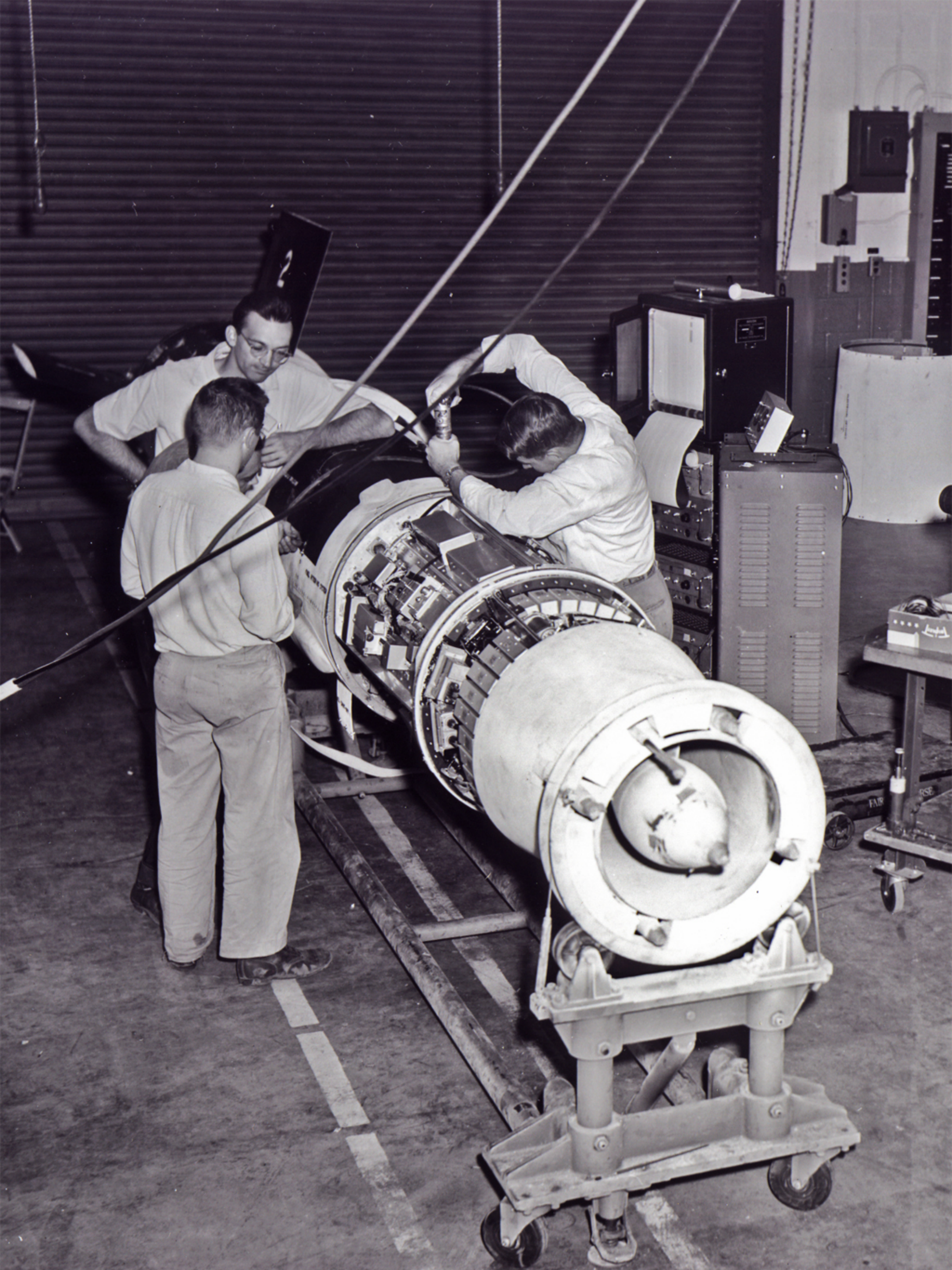

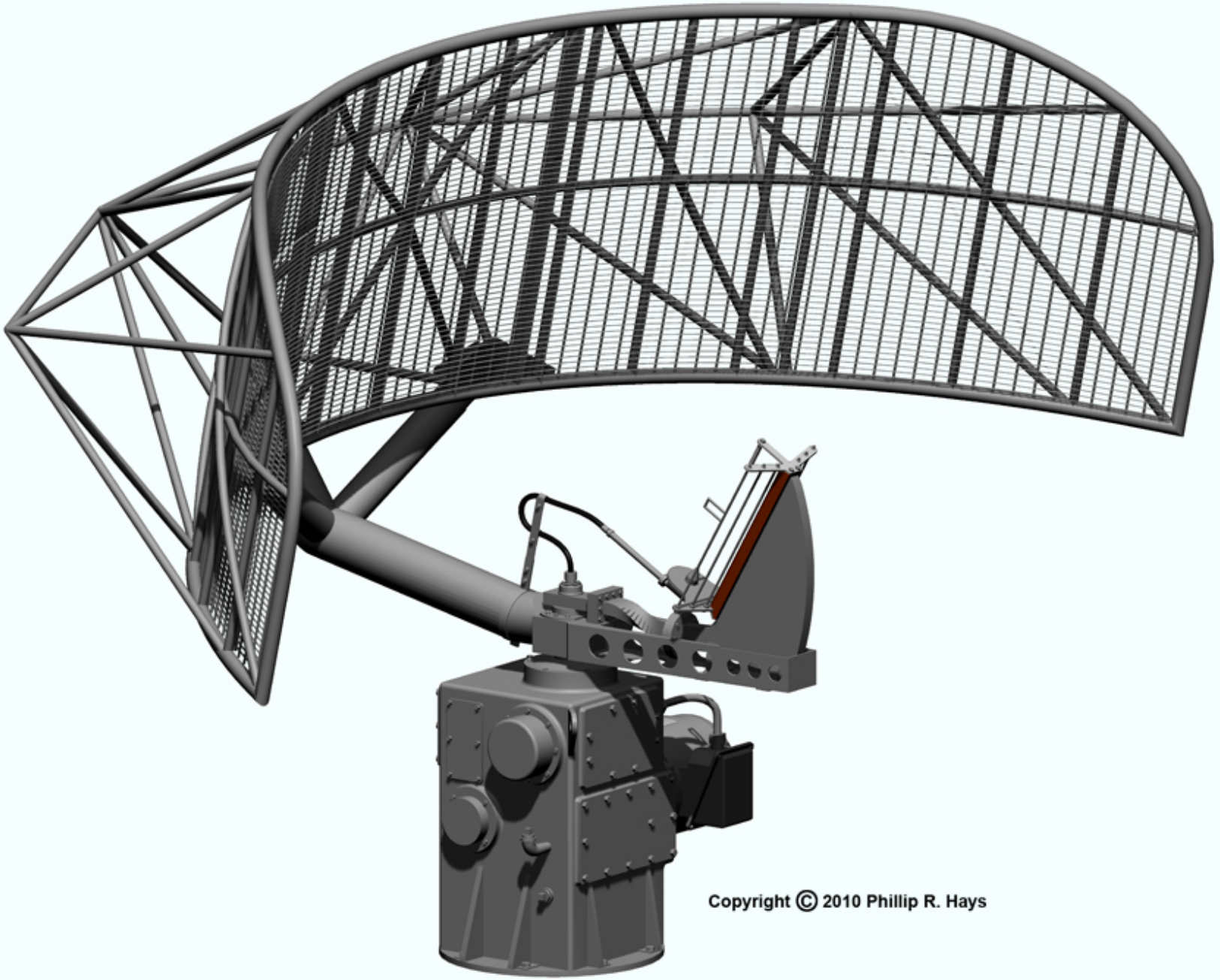

Copyright © 2010 Phillip R. Hays

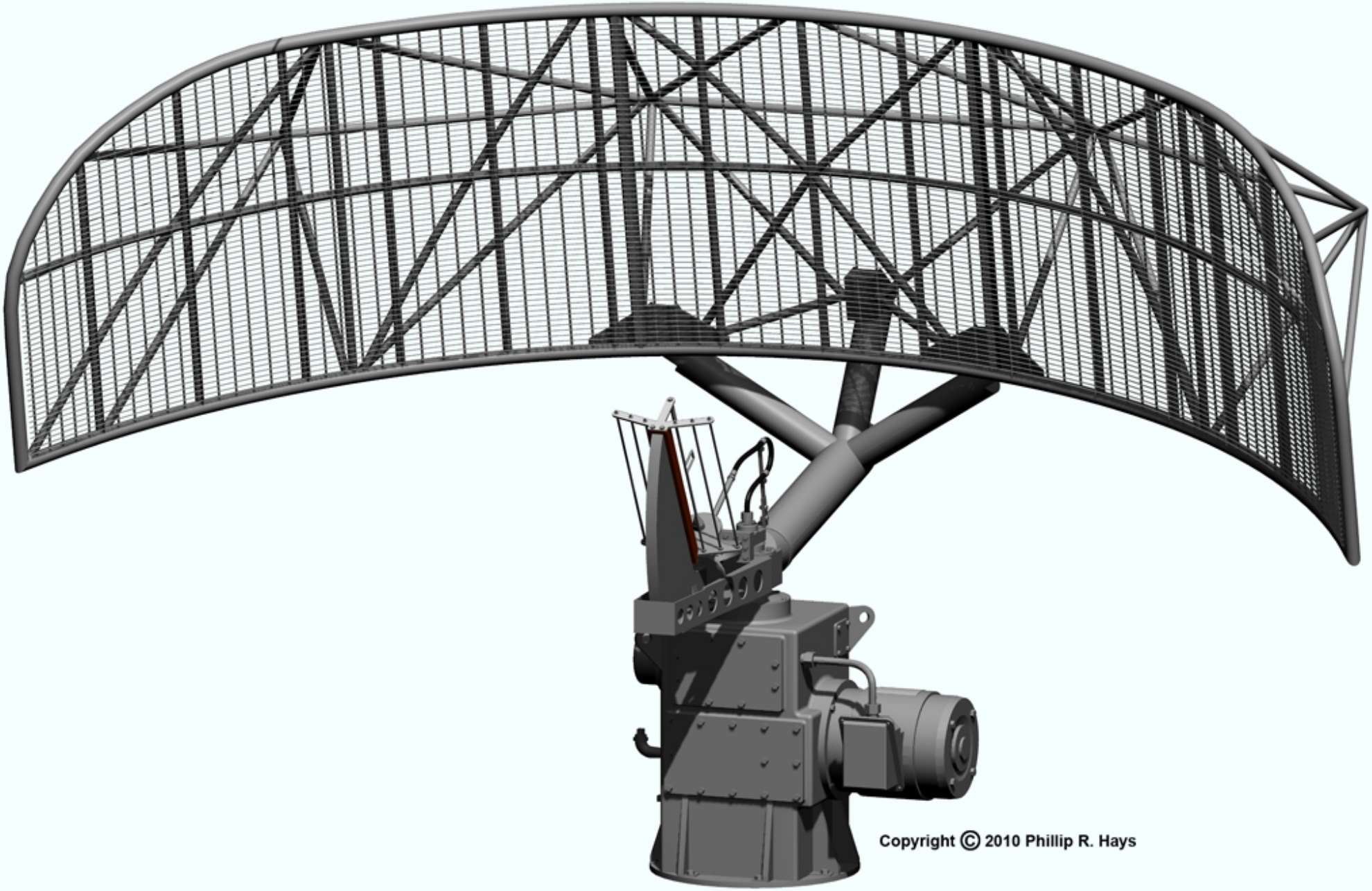
Copyright © 2010 Phillip R. Hays

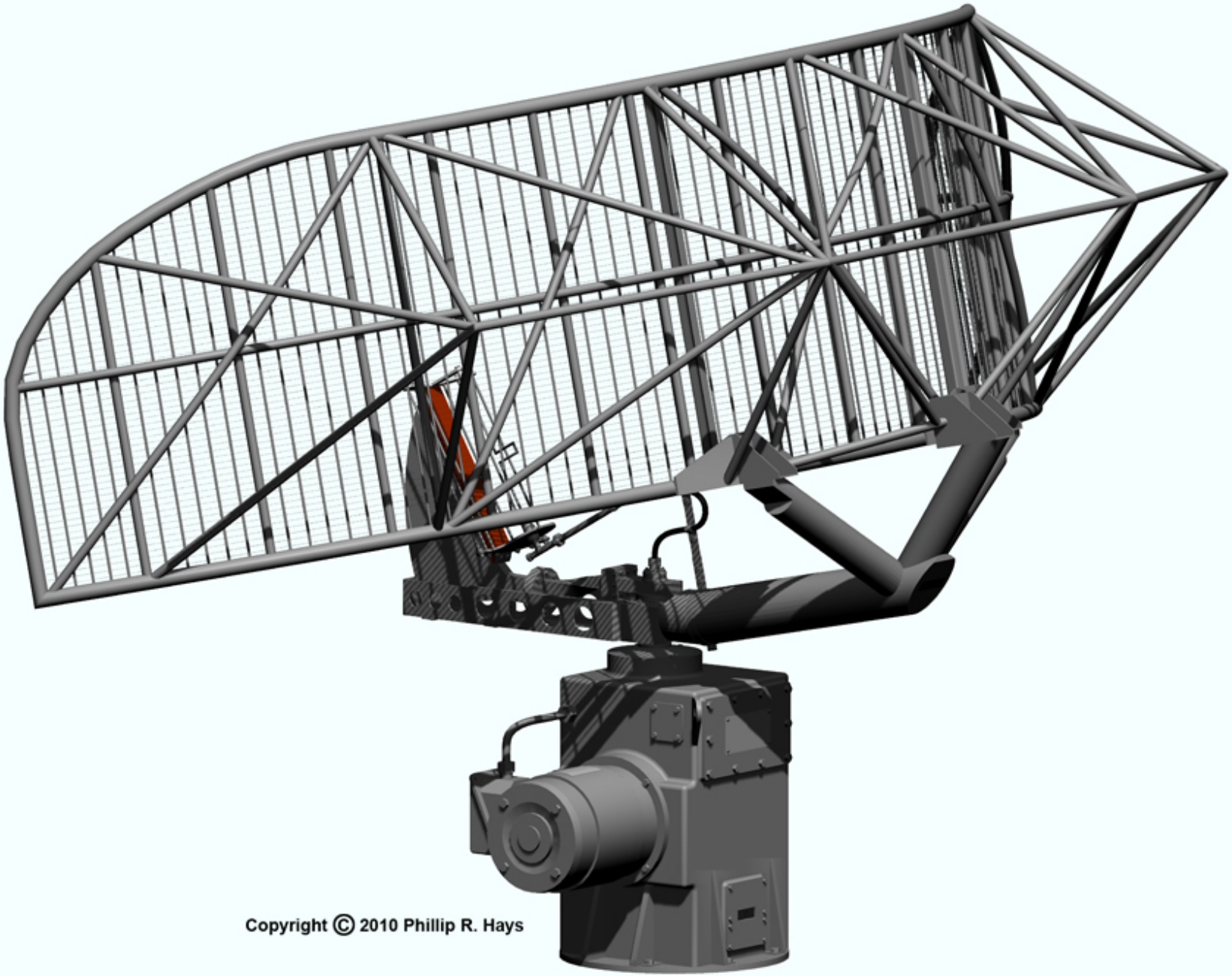
Copyright © 2010 Phillip R. Hays

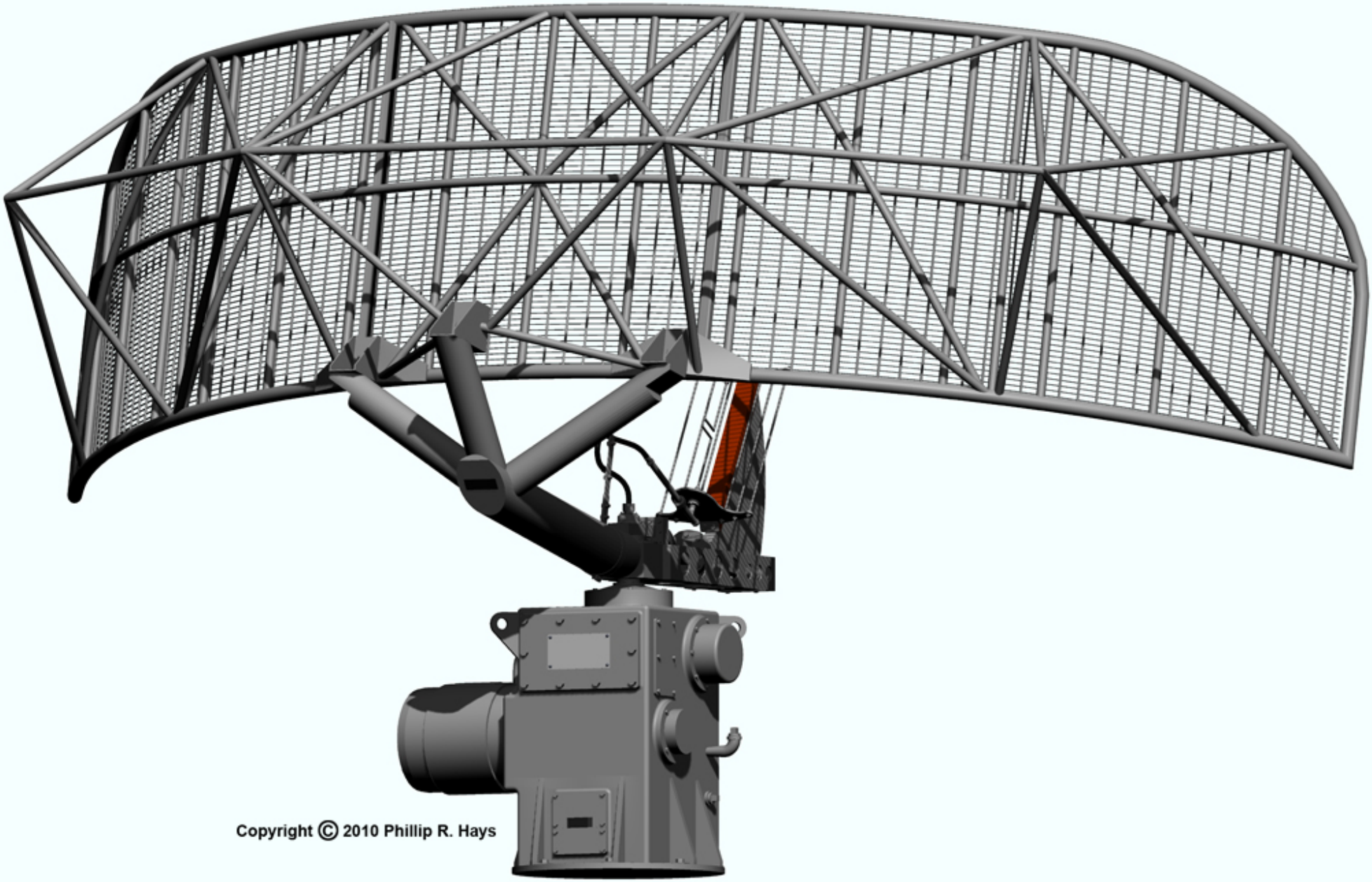
Copyright © 2010 Phillip R. Hays

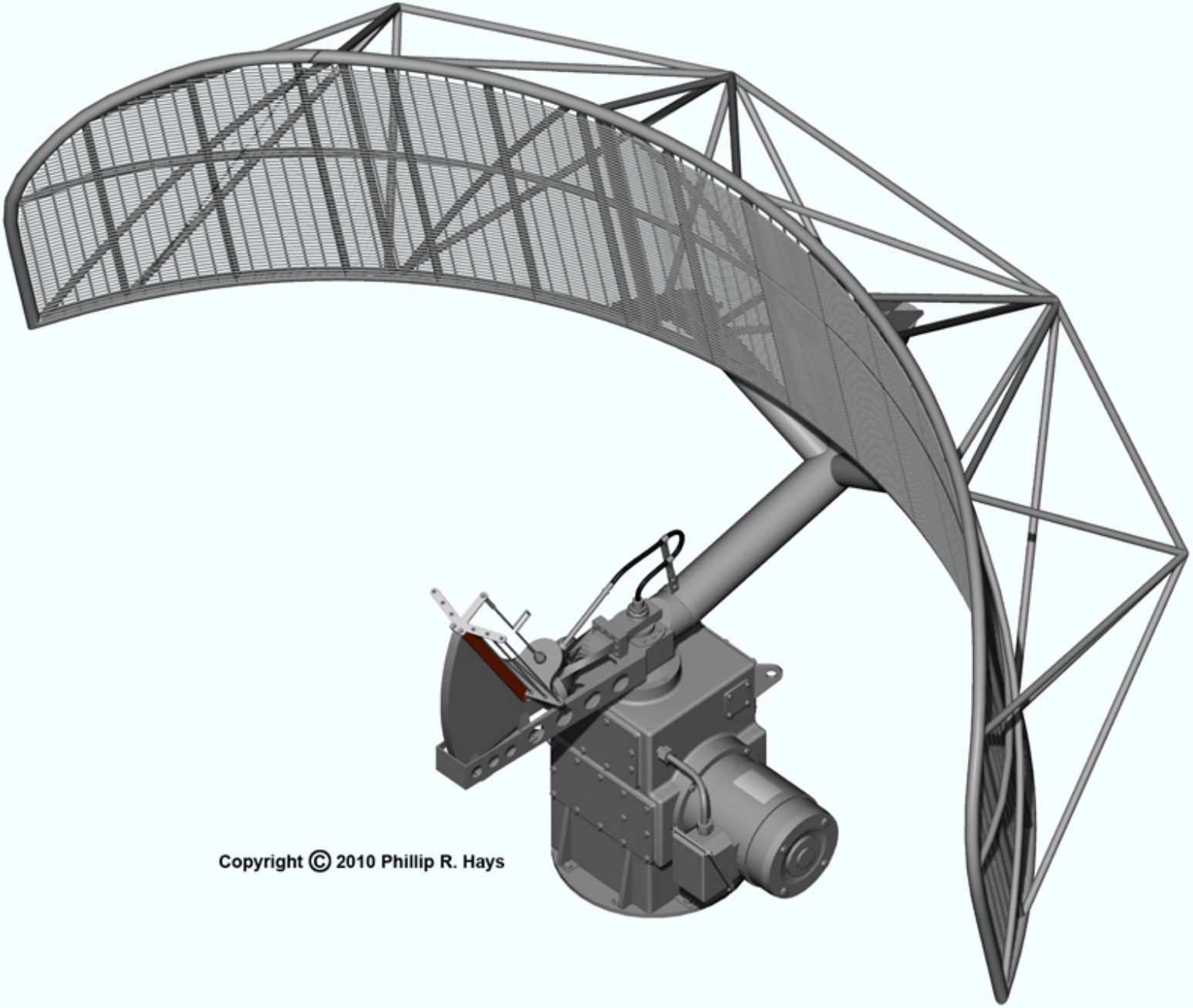
Copyright © 2010 Phillip R. Hays

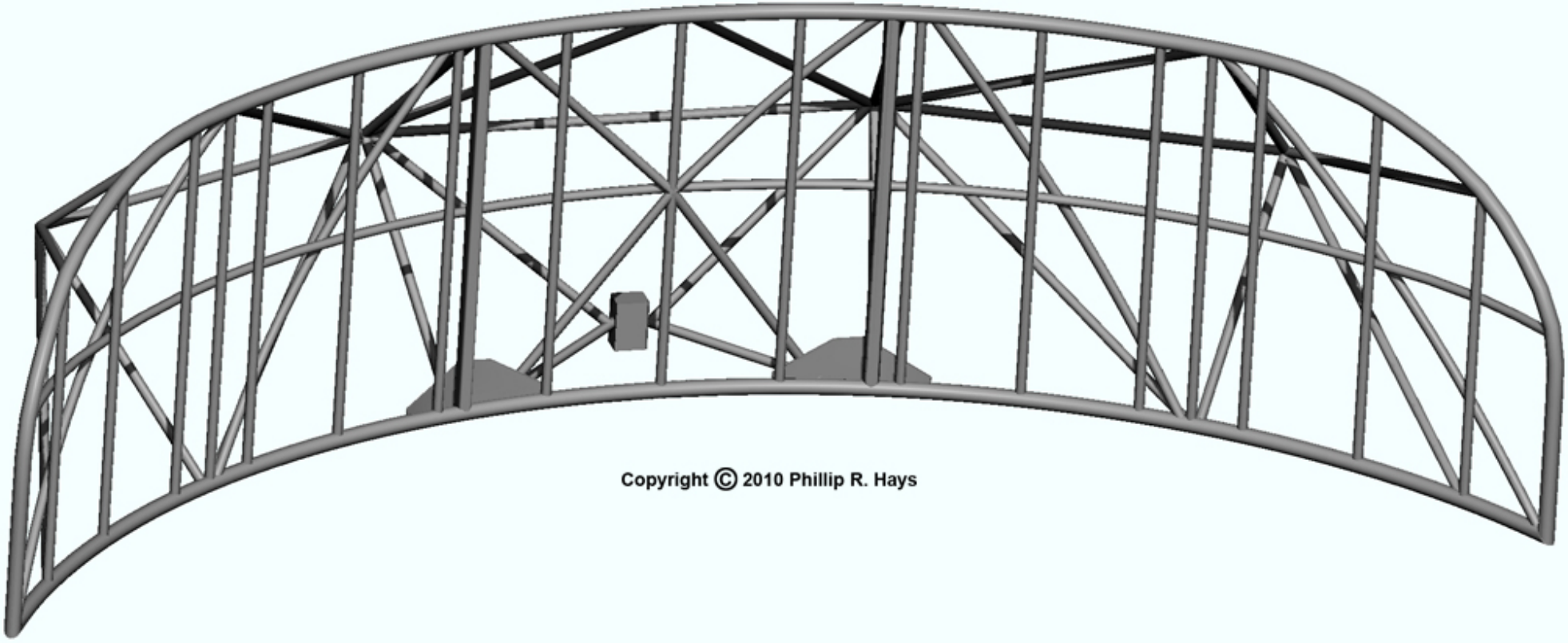

Copyright © 2010 Phillip R. Hays

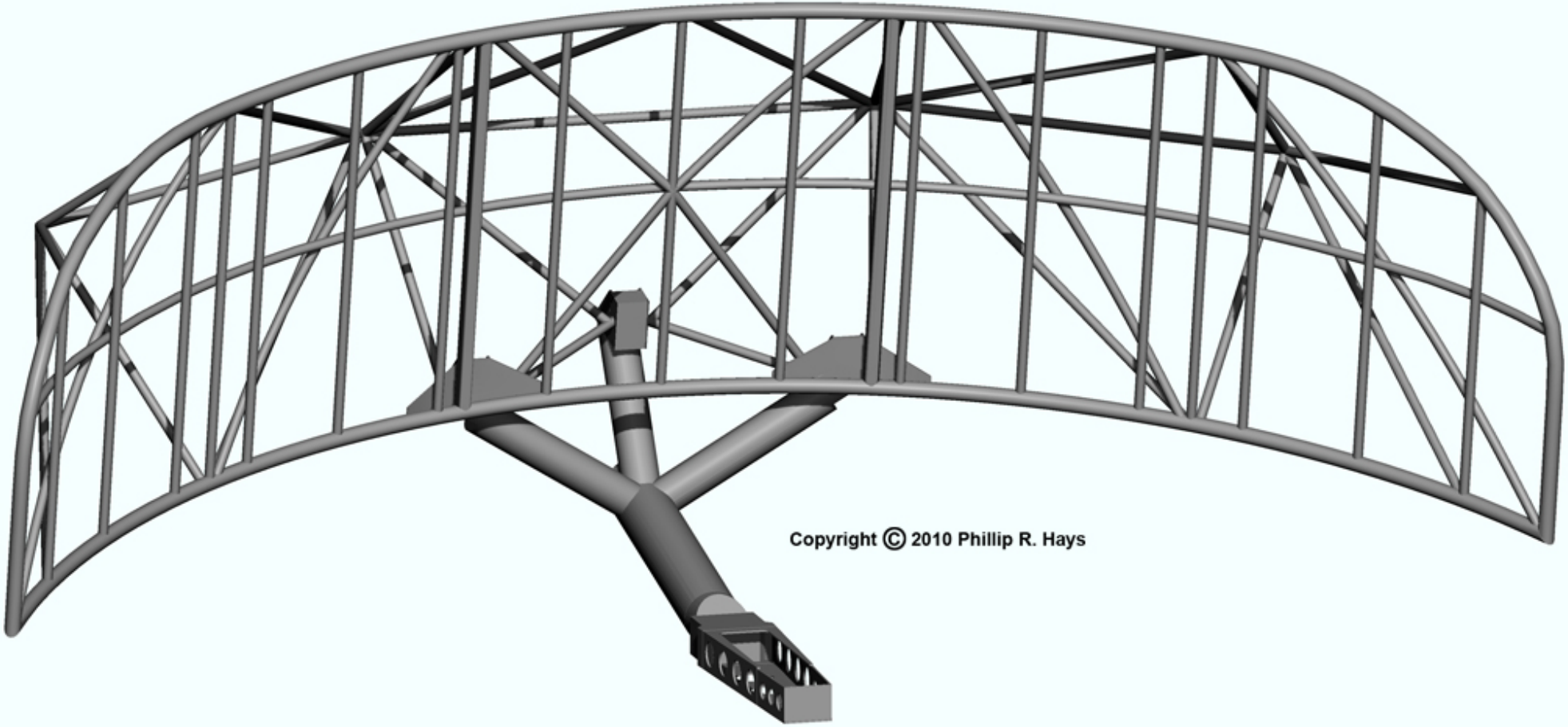
Copyright © 2010 Phillip R. Hays

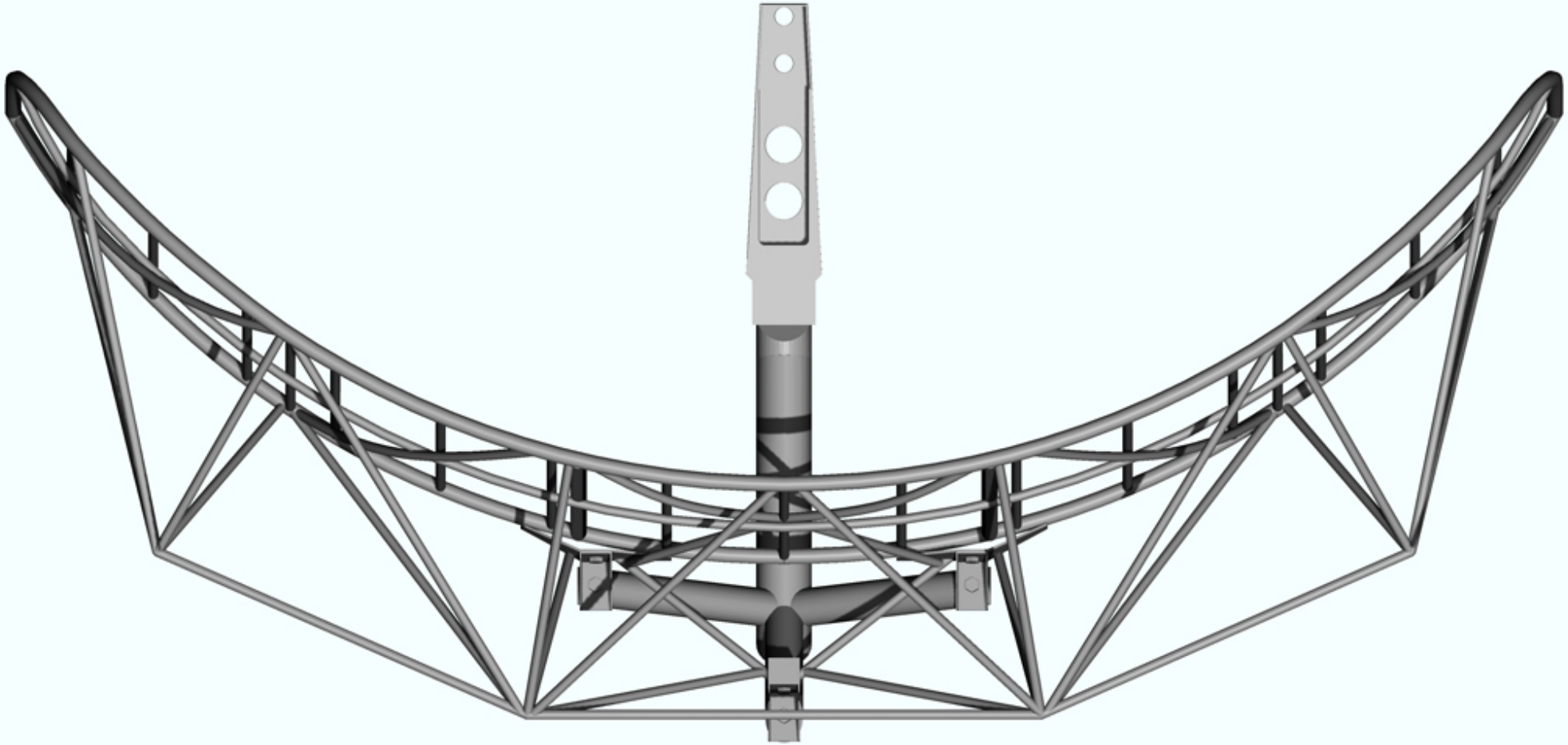

Copyright © 2010 Phillip R. Hays

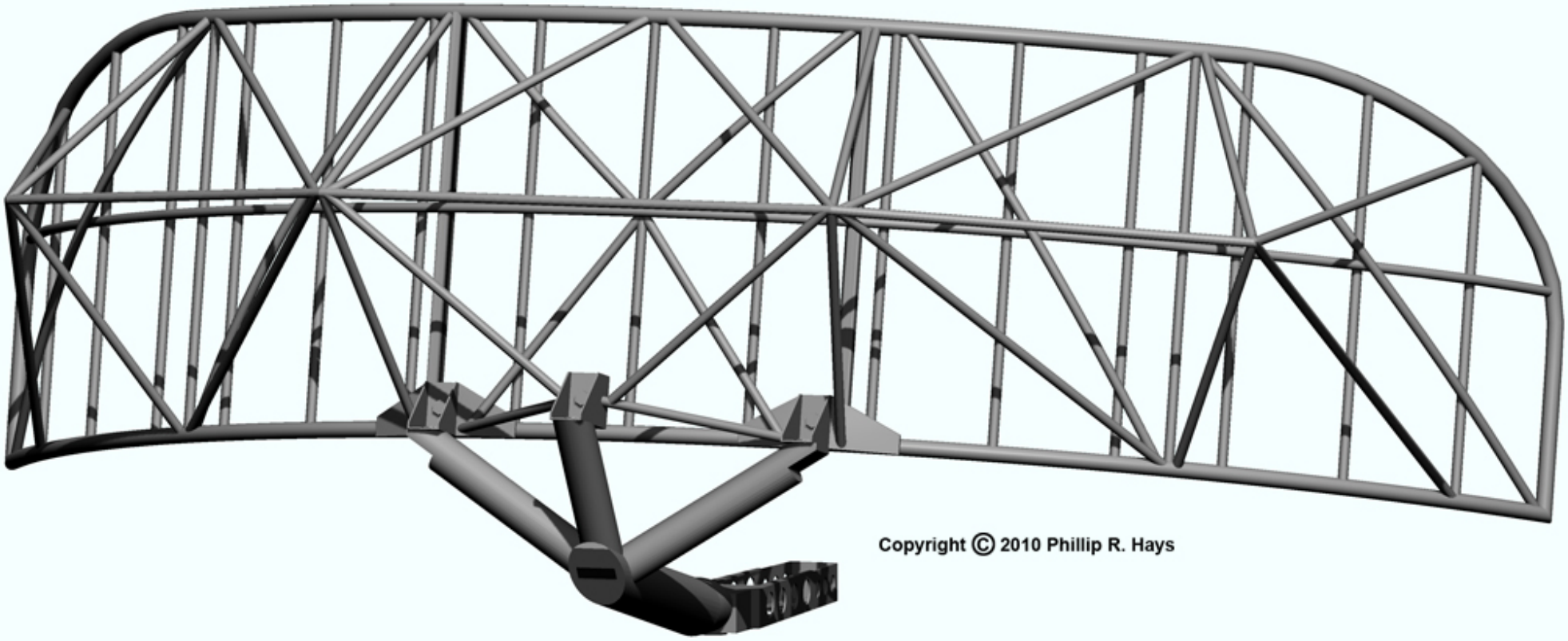

Copyright © 2010 Phillip R. Hays

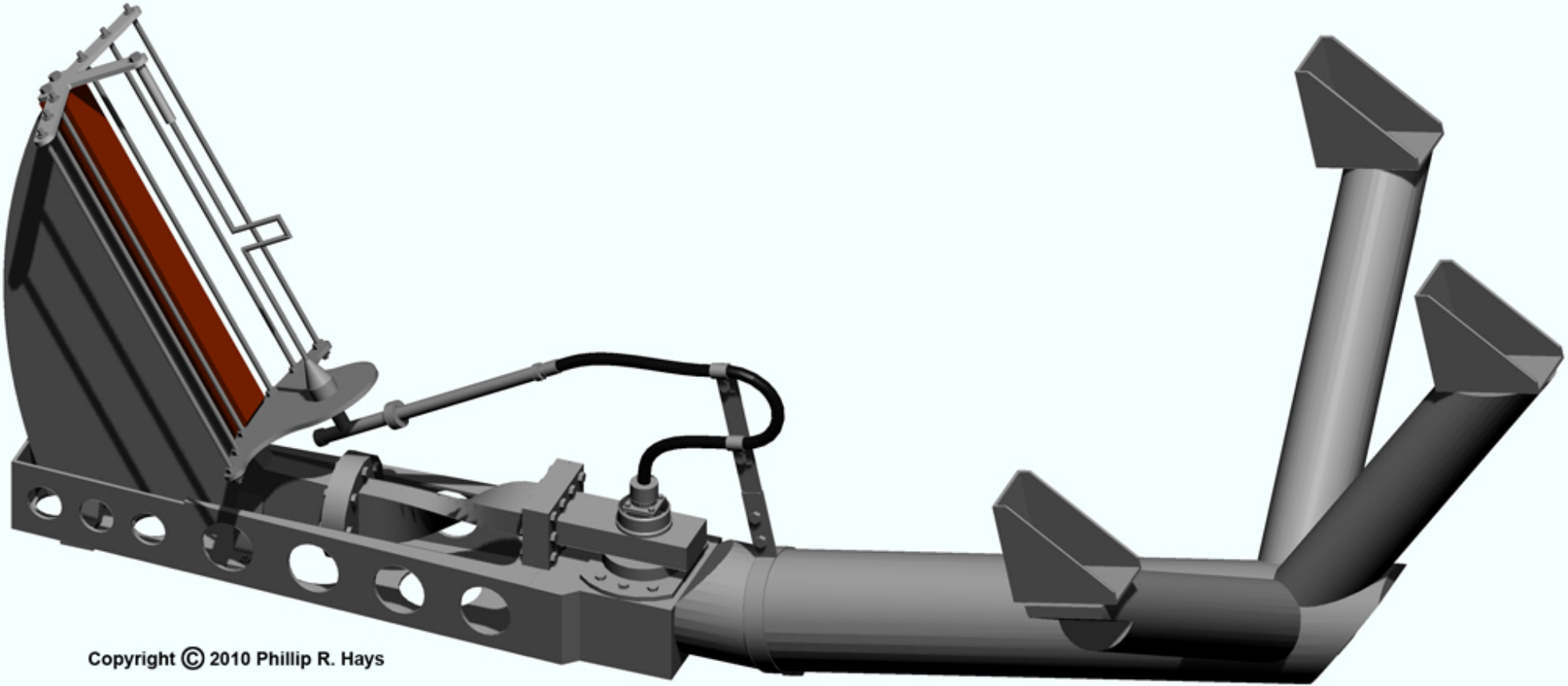

Copyright © 2010 Phillip R. Hays

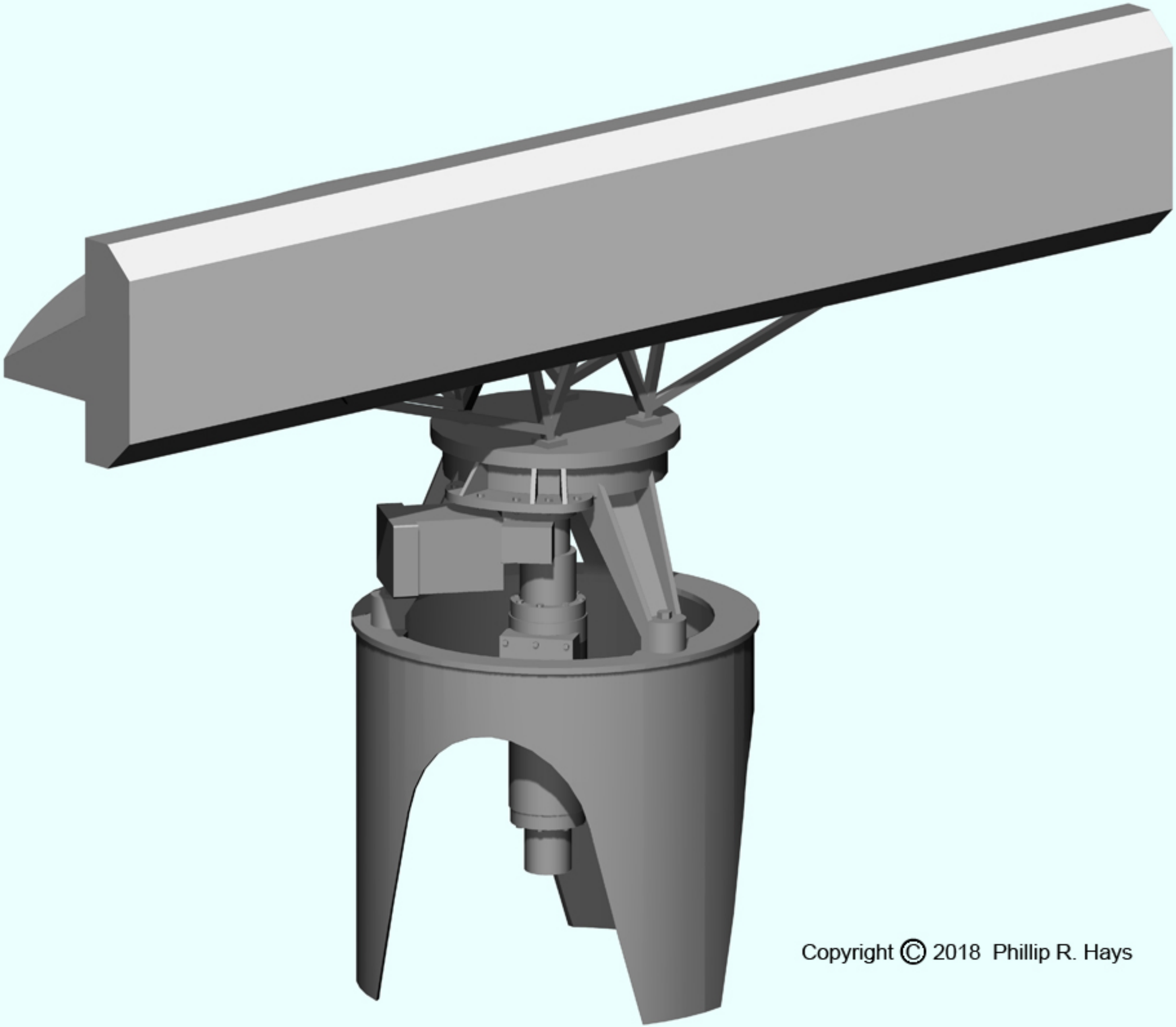

Copyright © 2018 Phillip R. Hays

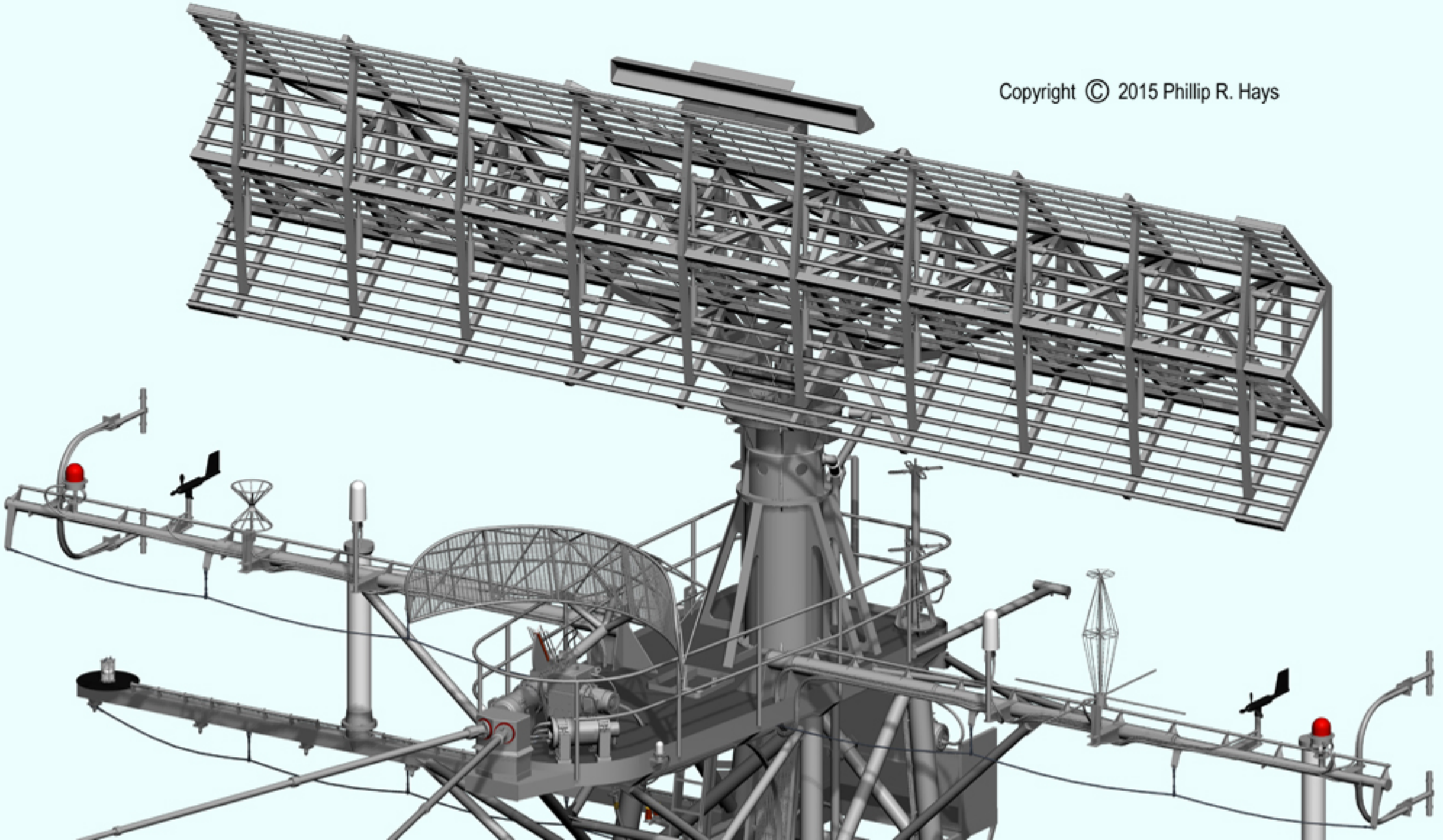
Copyright © 2015 Phillip R. Hays

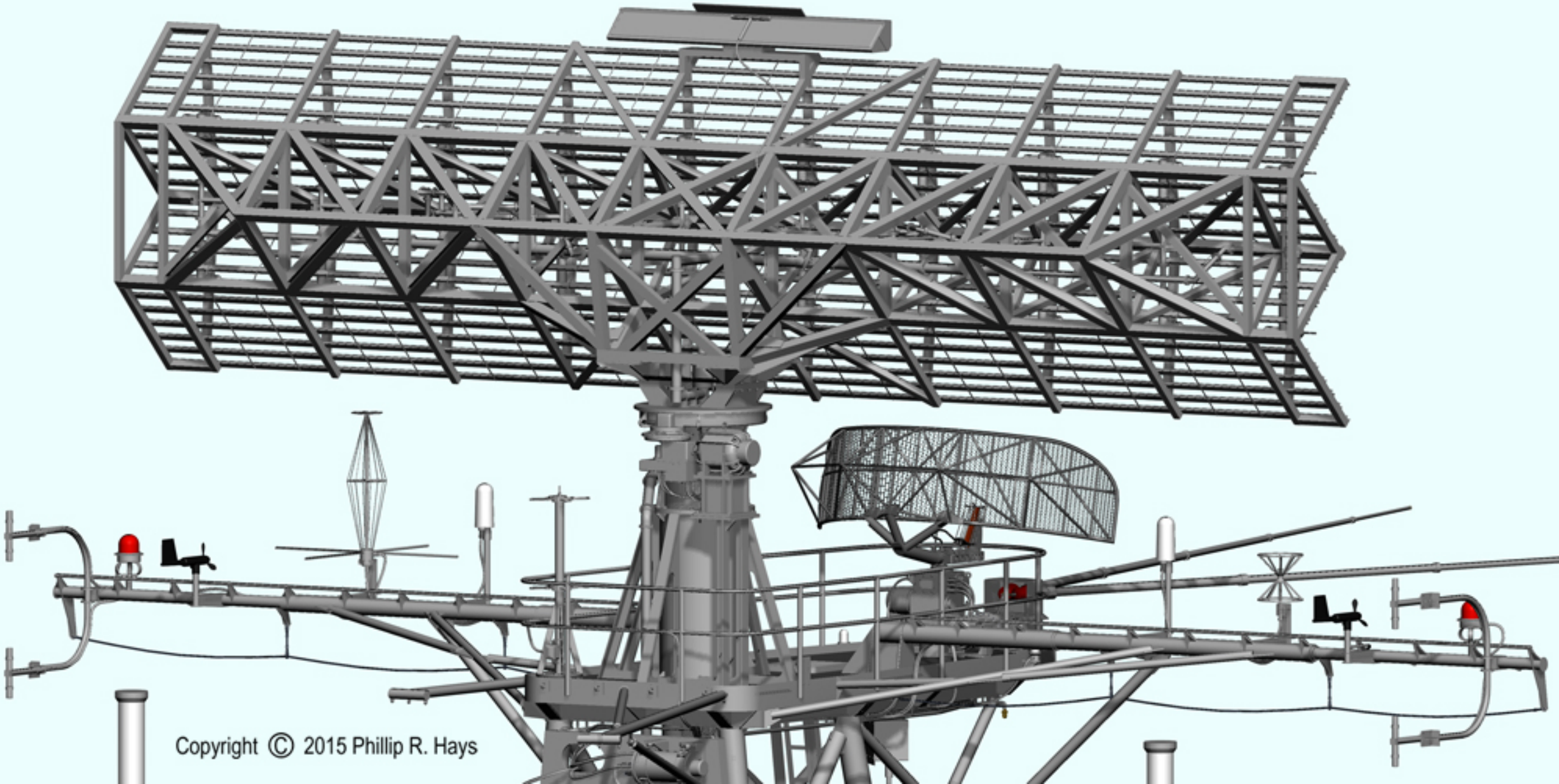
Copyright © 2015 Phillip R. Hays

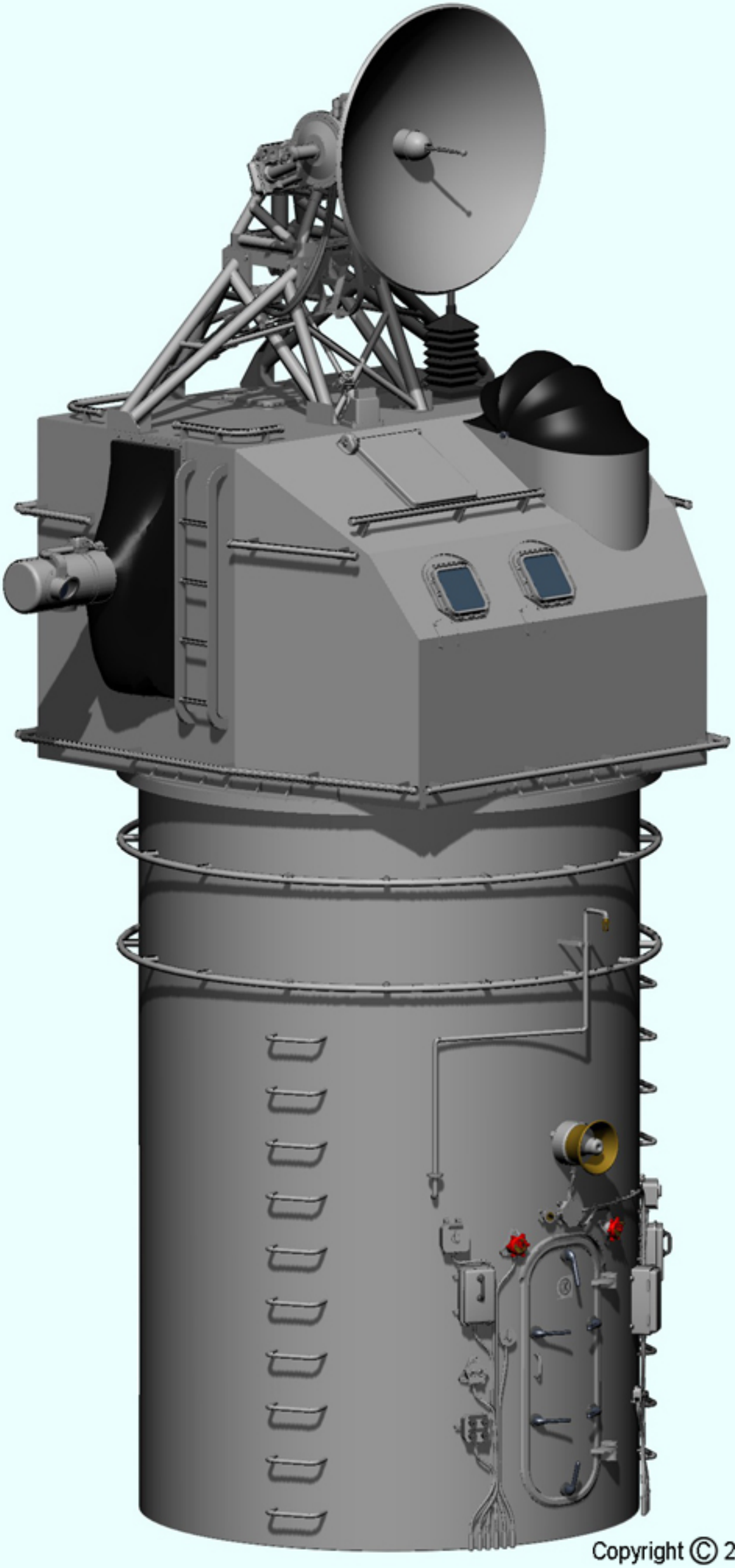

Copyright © 2016 Phillip R. Hays

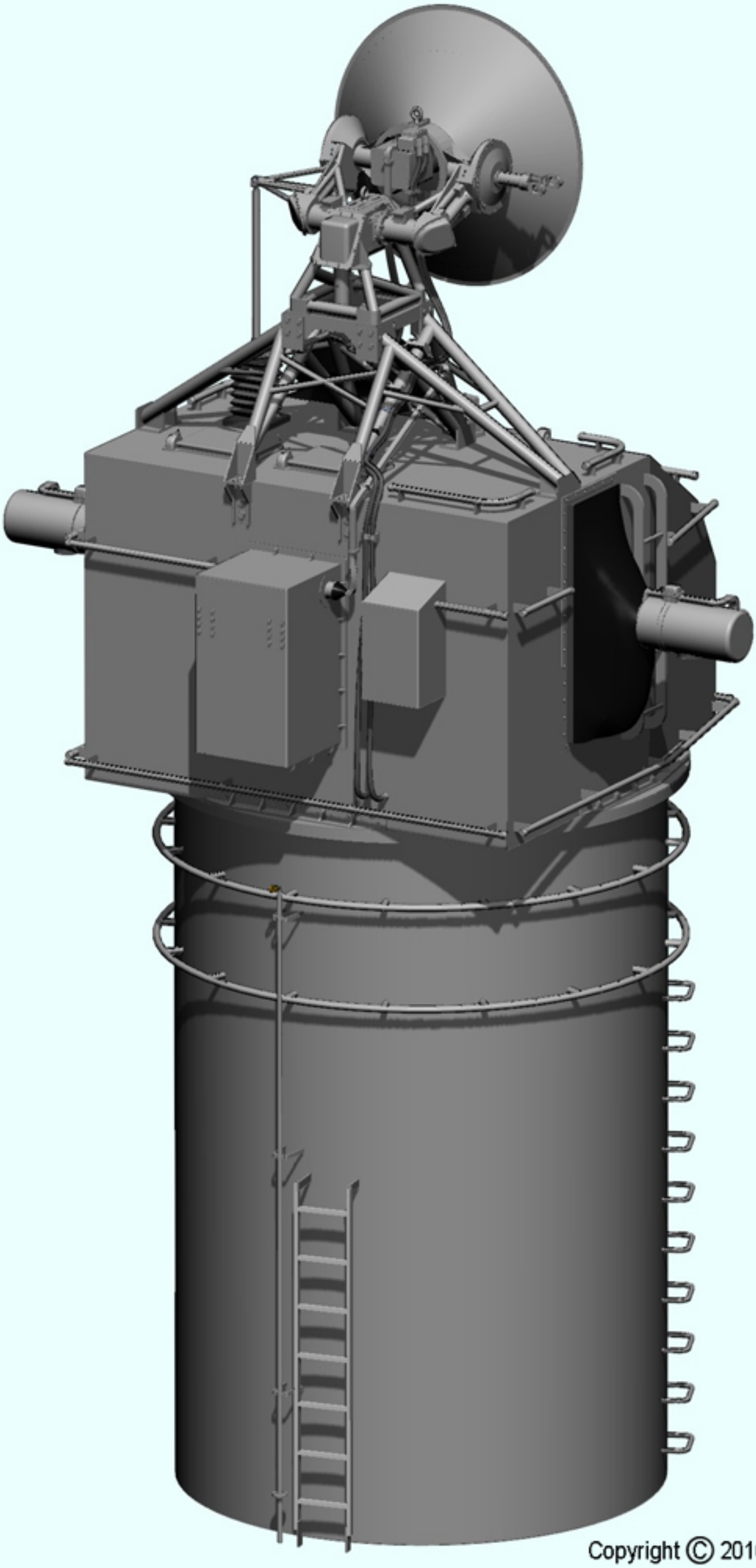

Copyright © 2016 Phillip R. Hays

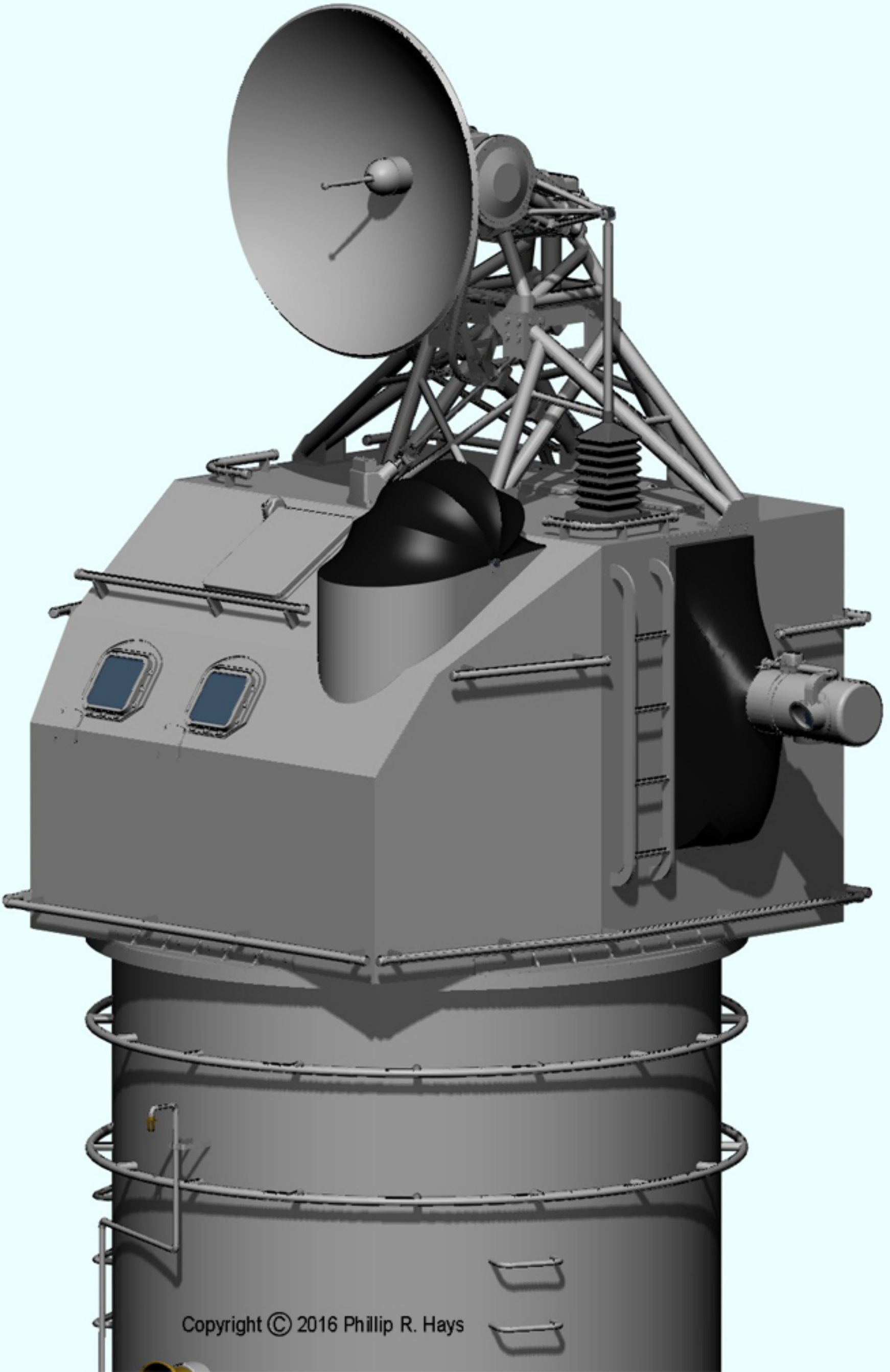
Copyright © 2016 Phillip R. Hays

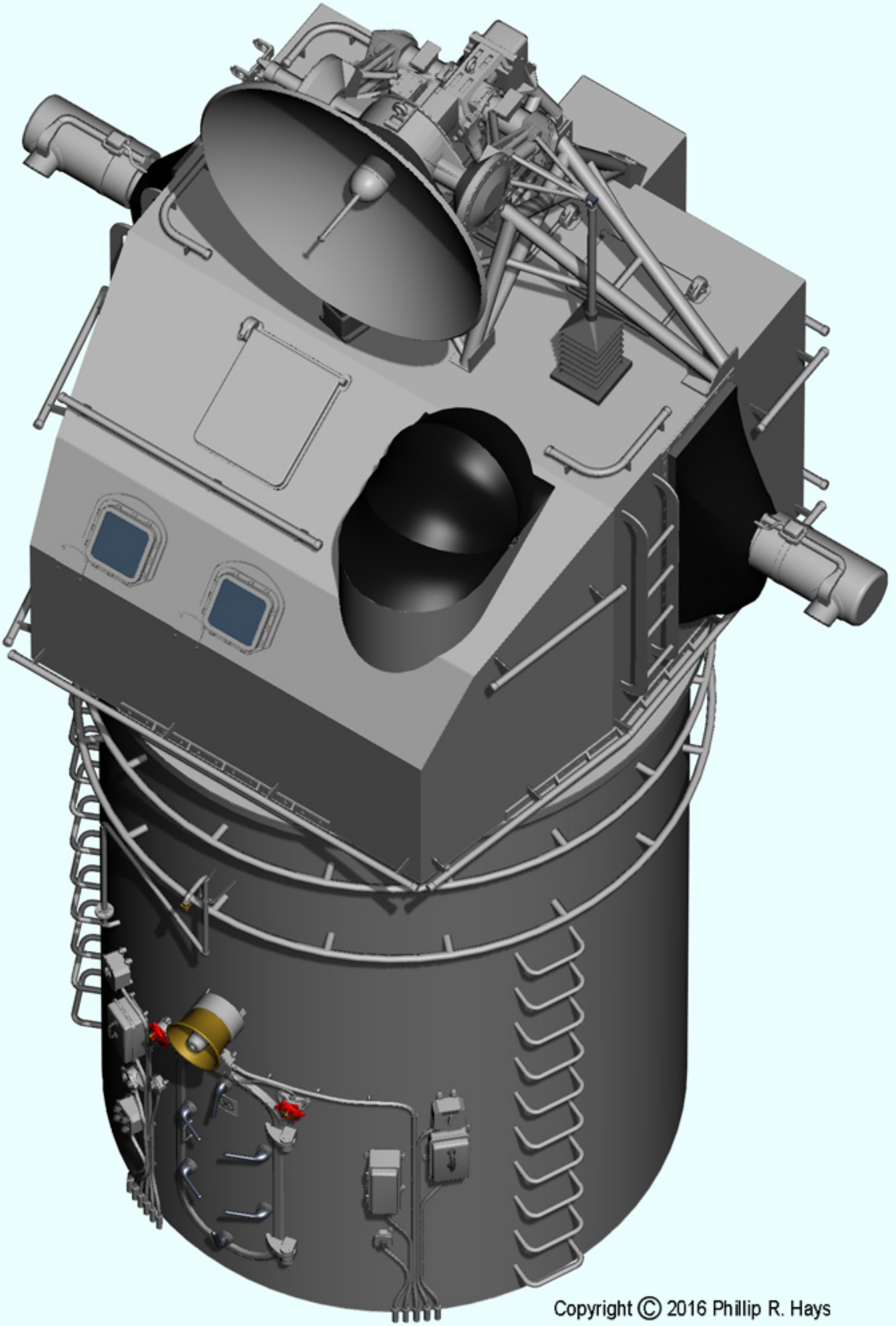

Copyright © 2016 Phillip R. Hays

Copyright © 2016 Phillip R. Hays

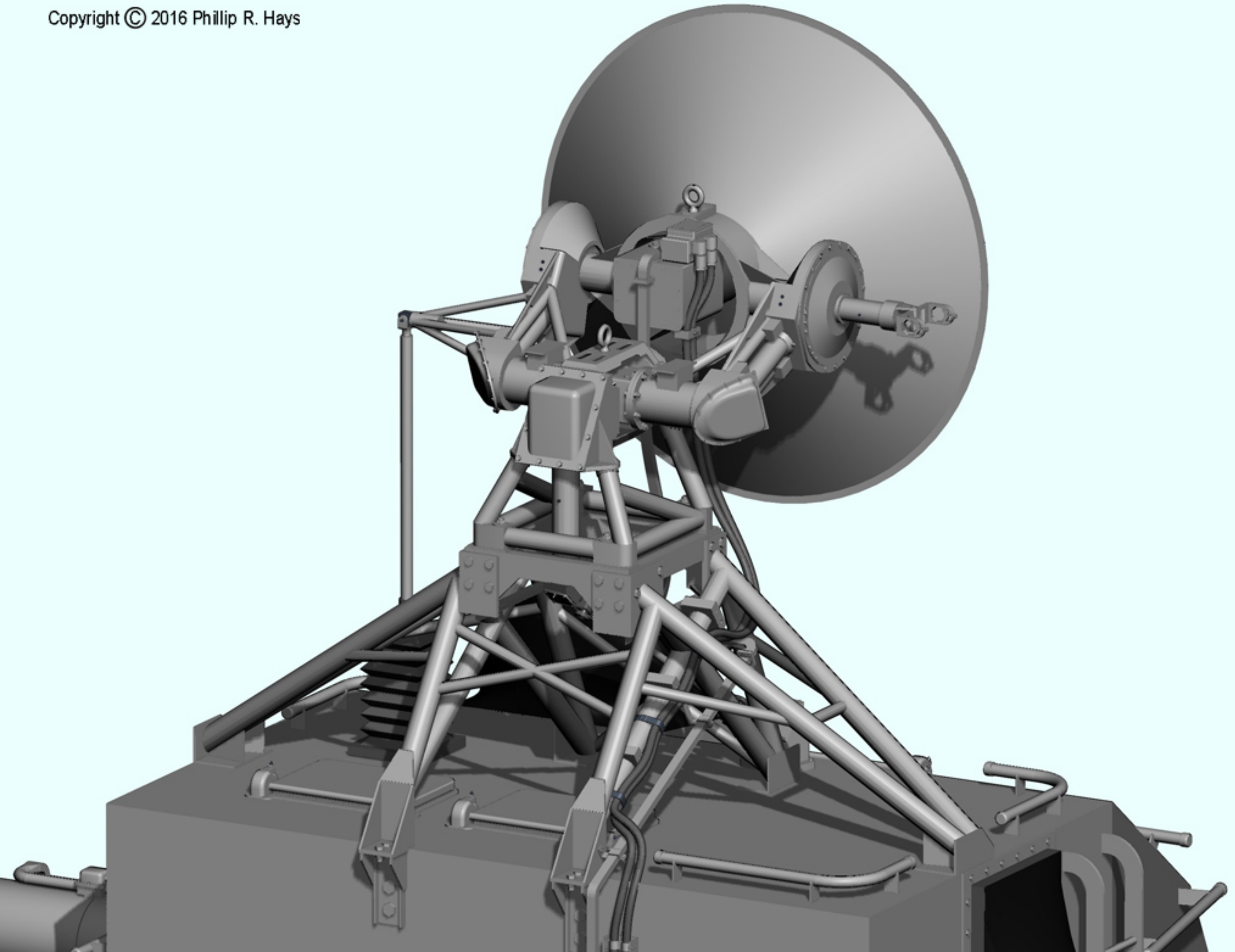

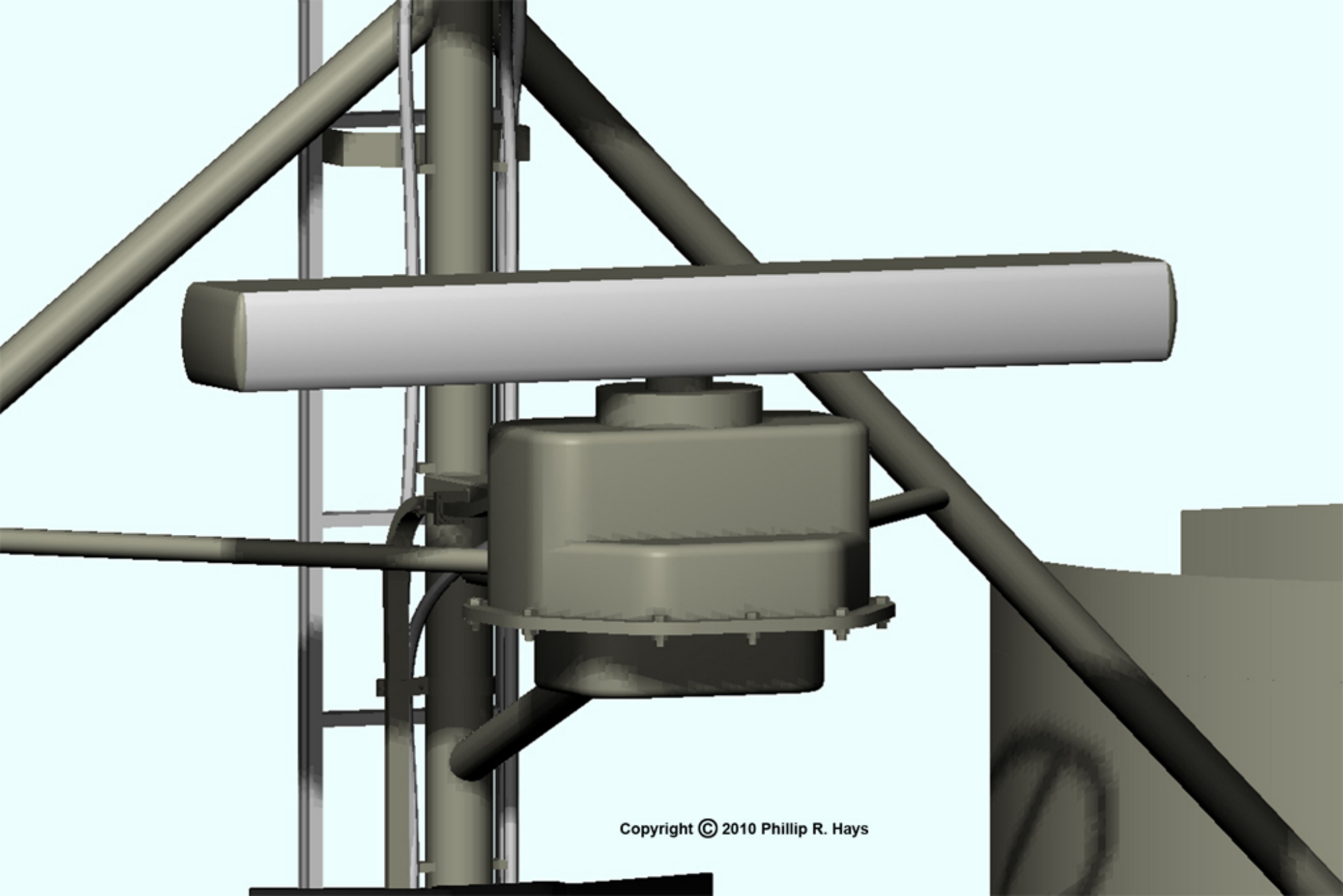
Copyright © 2010 Phillip R. Hays

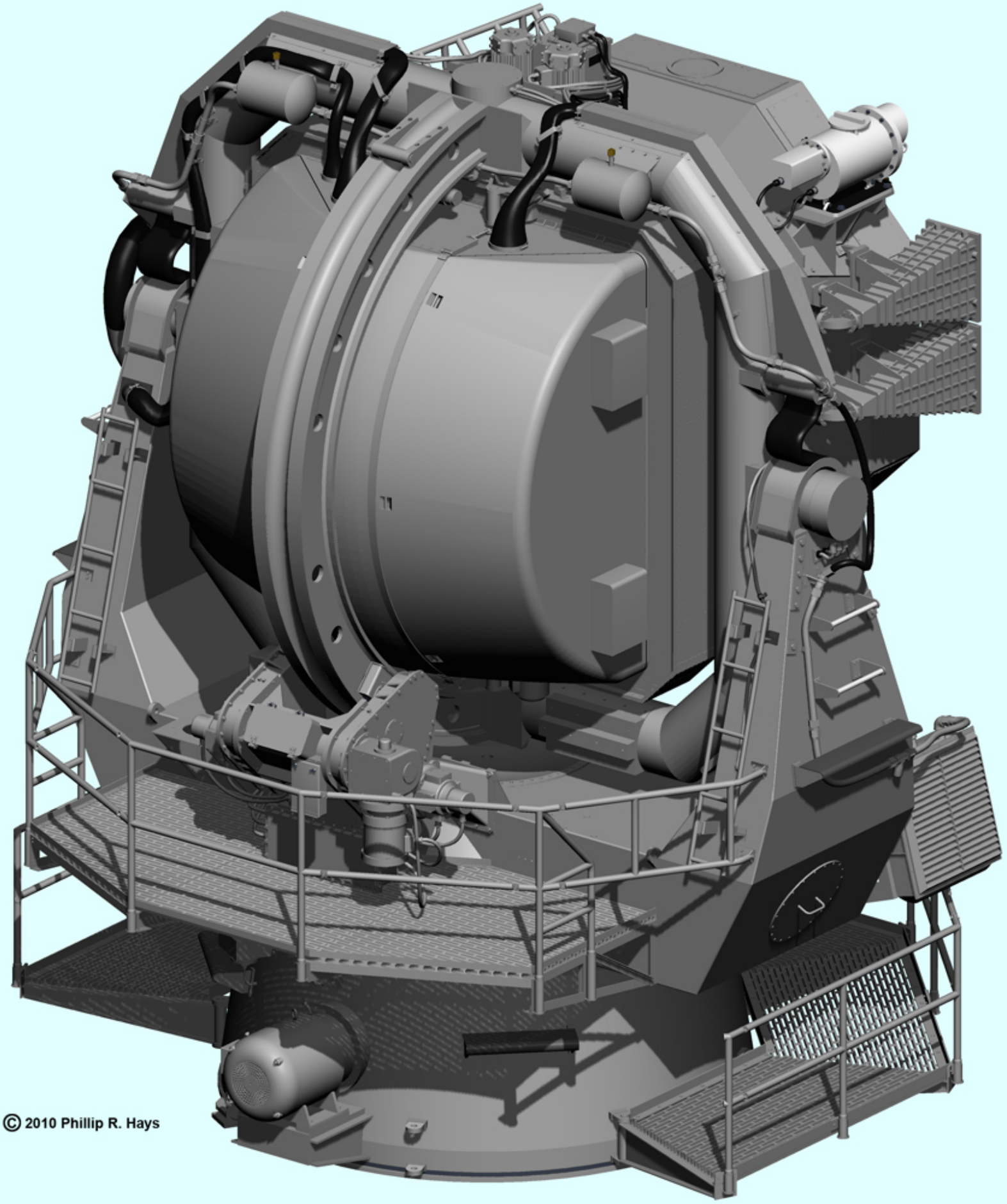

Copyright © 2010 Phillip R. Hays

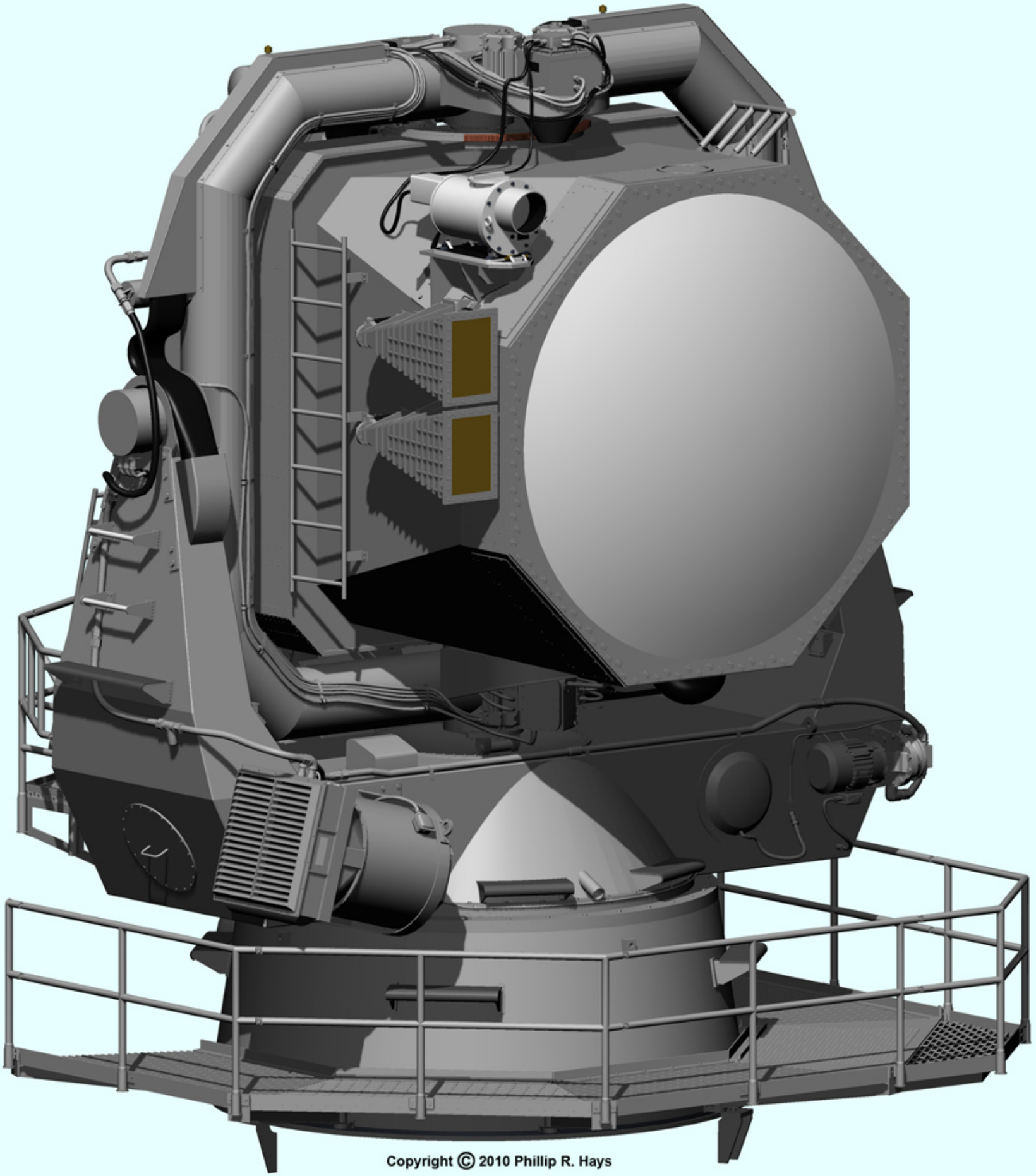

Copyright © 2010 Phillip R. Hays

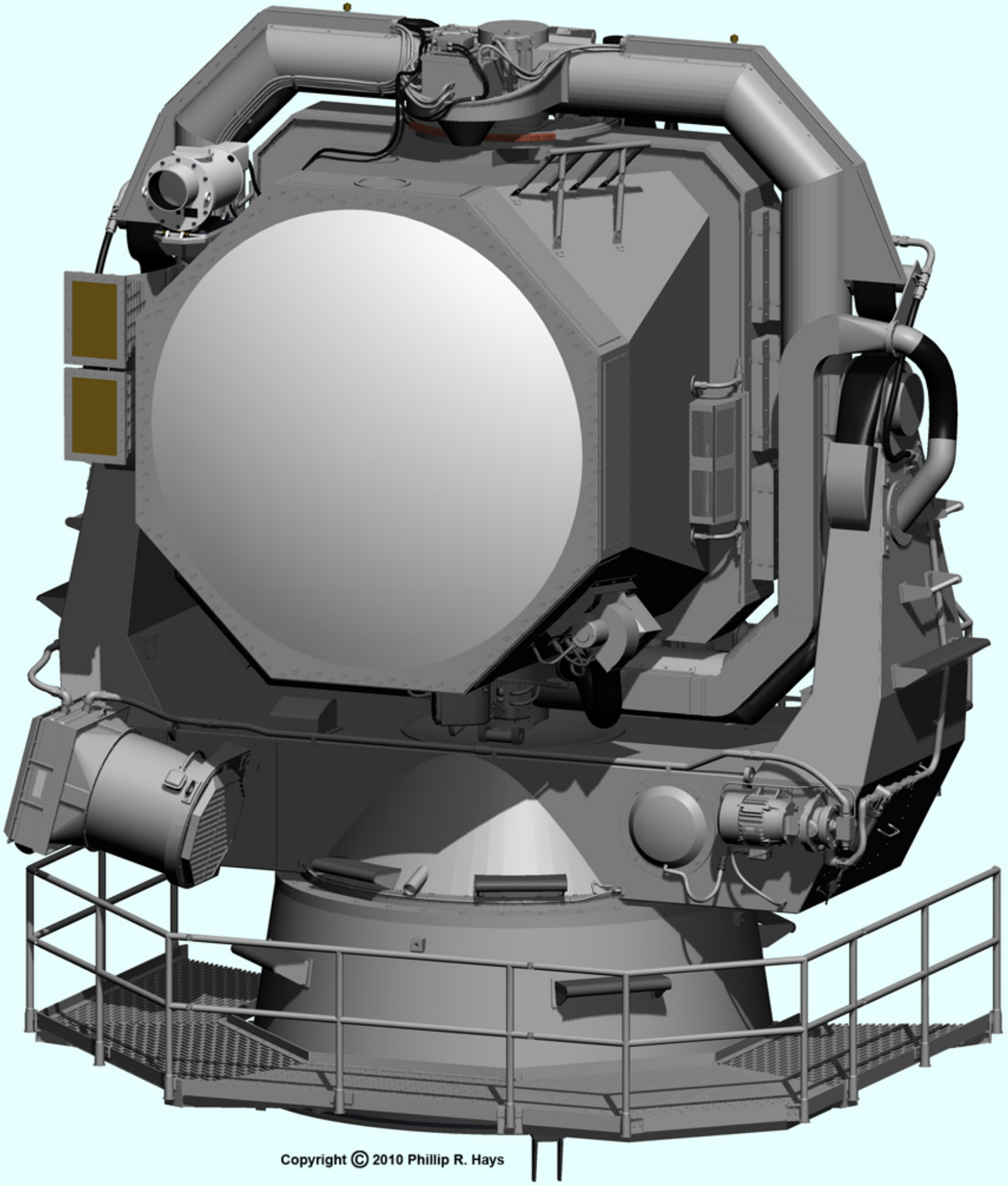

Copyright © 2010 Phillip R. Hays

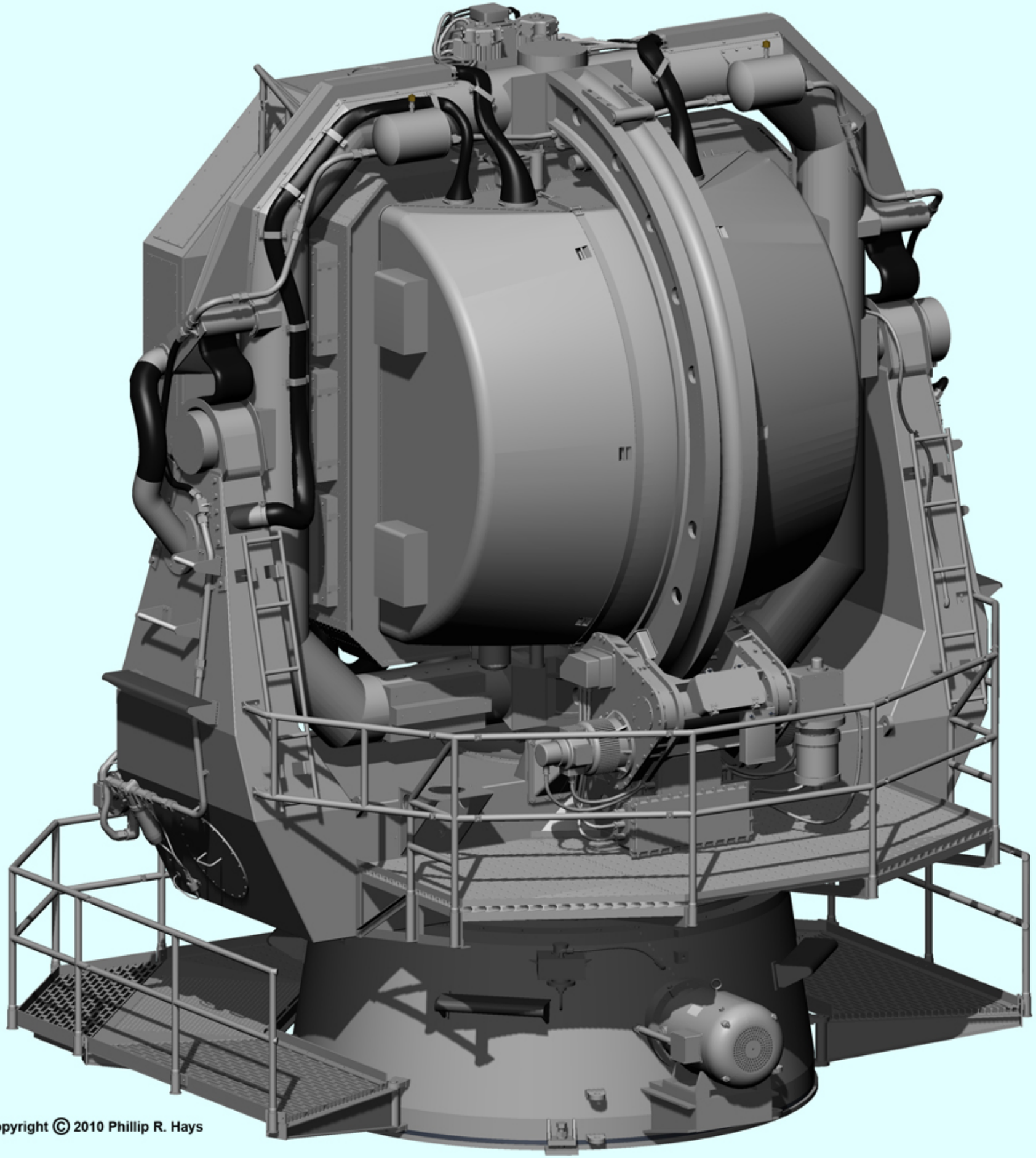

Copyright © 2010 Phillip R. Hays

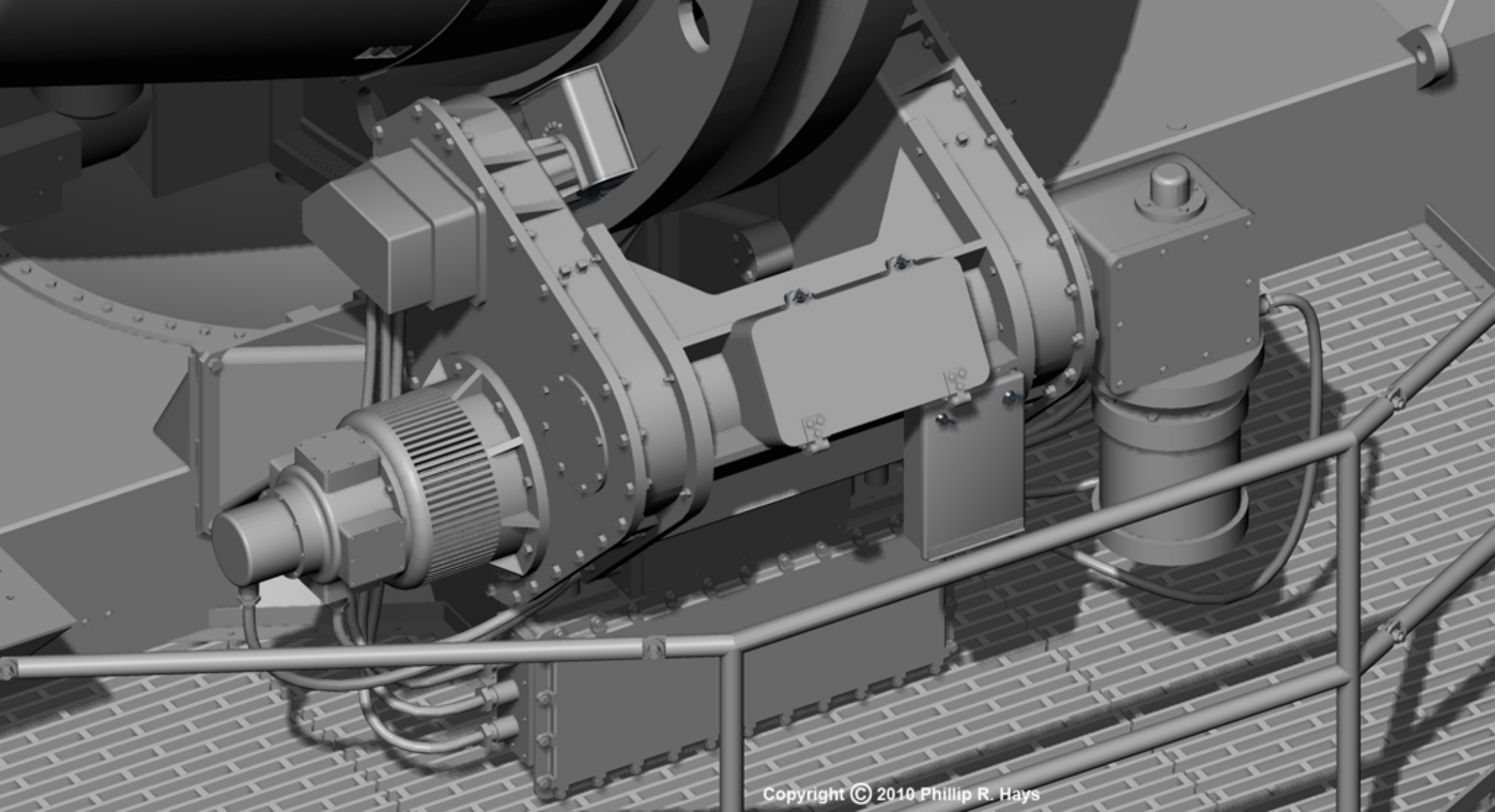
Copyright © 2010 Phillip R. Hays

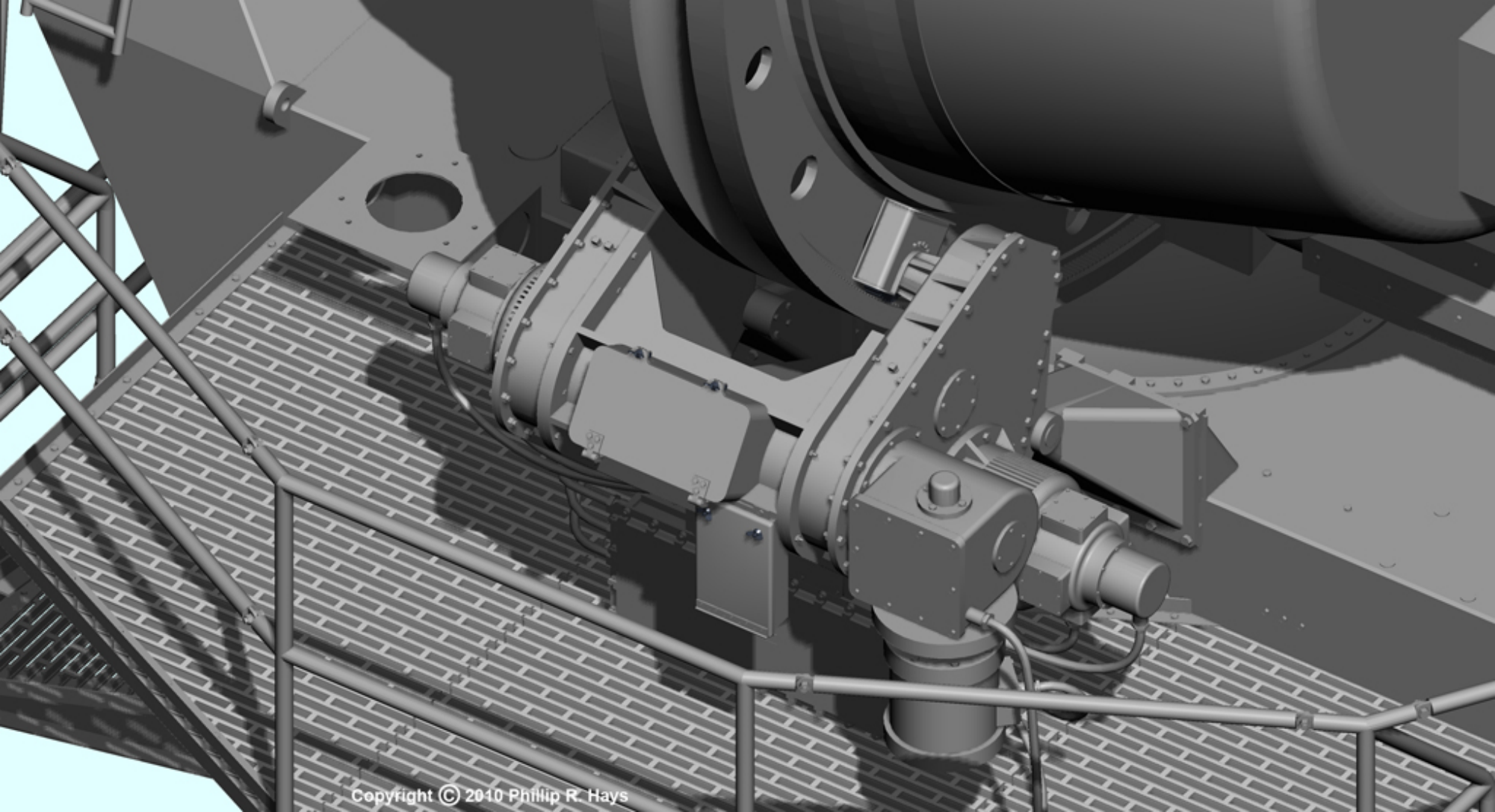
Copyright © 2010 Phillip R. Hays

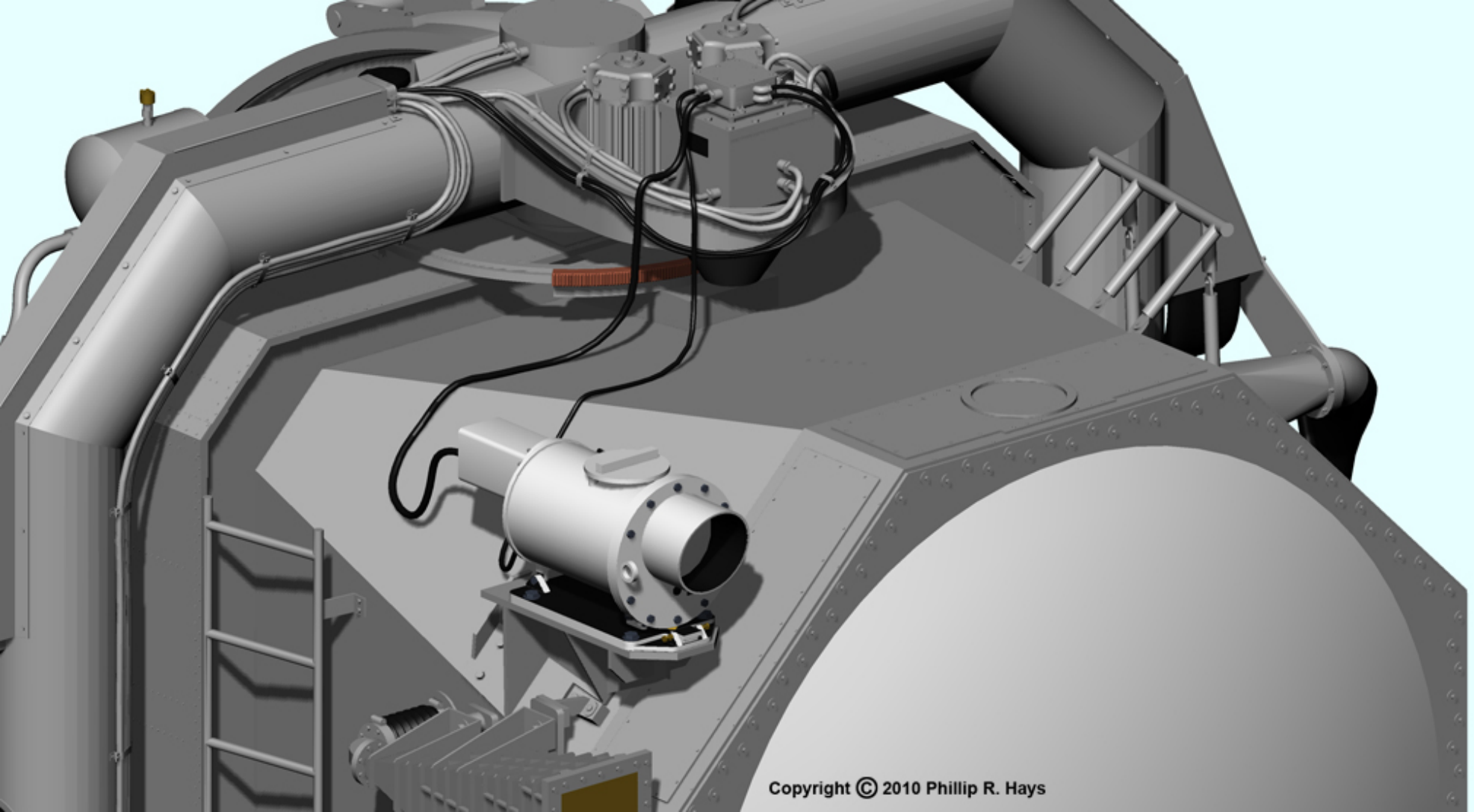
Copyright © 2010 Phillip R. Hays

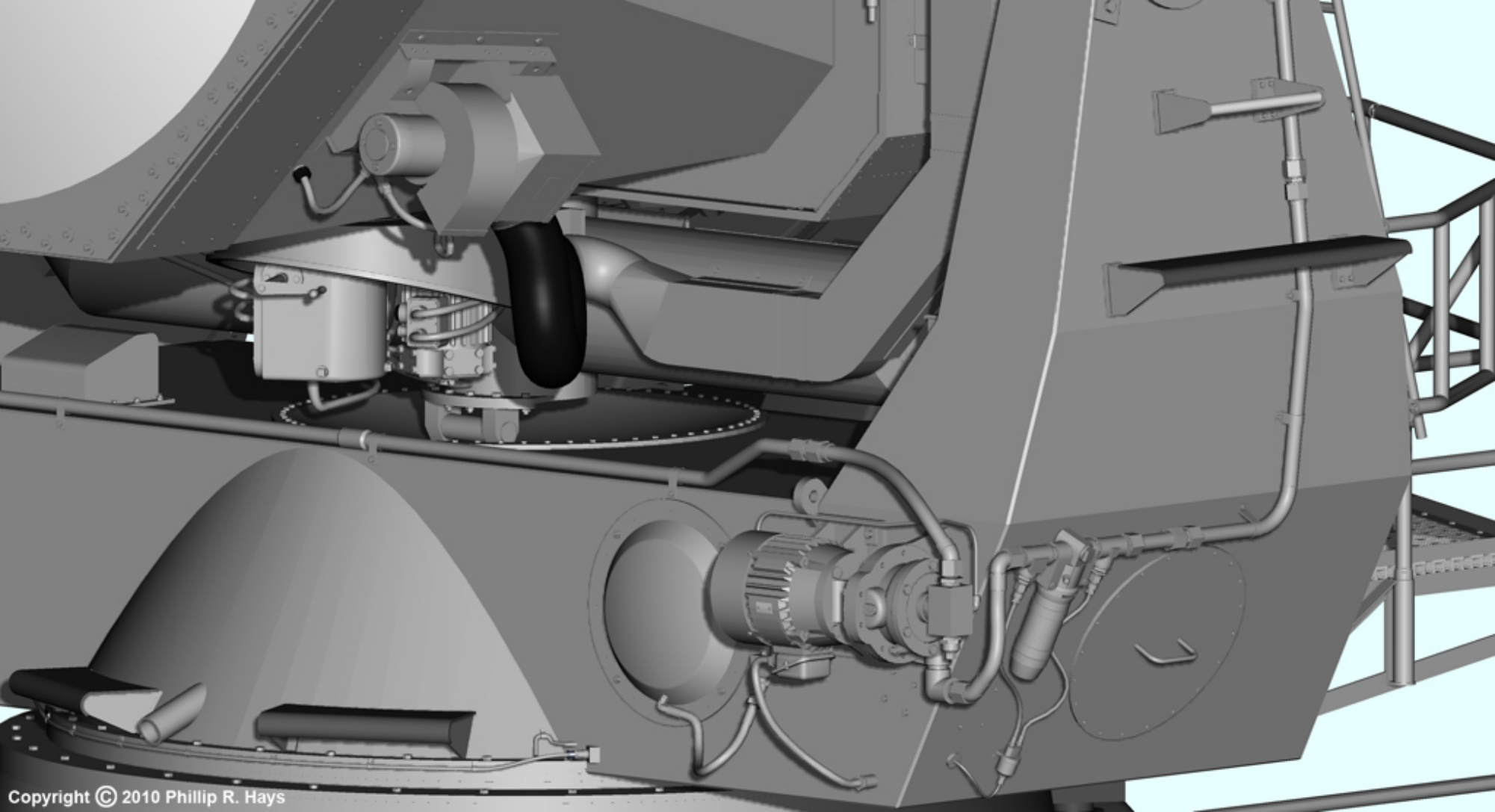

Copyright © 2010 Phillip R. Hays

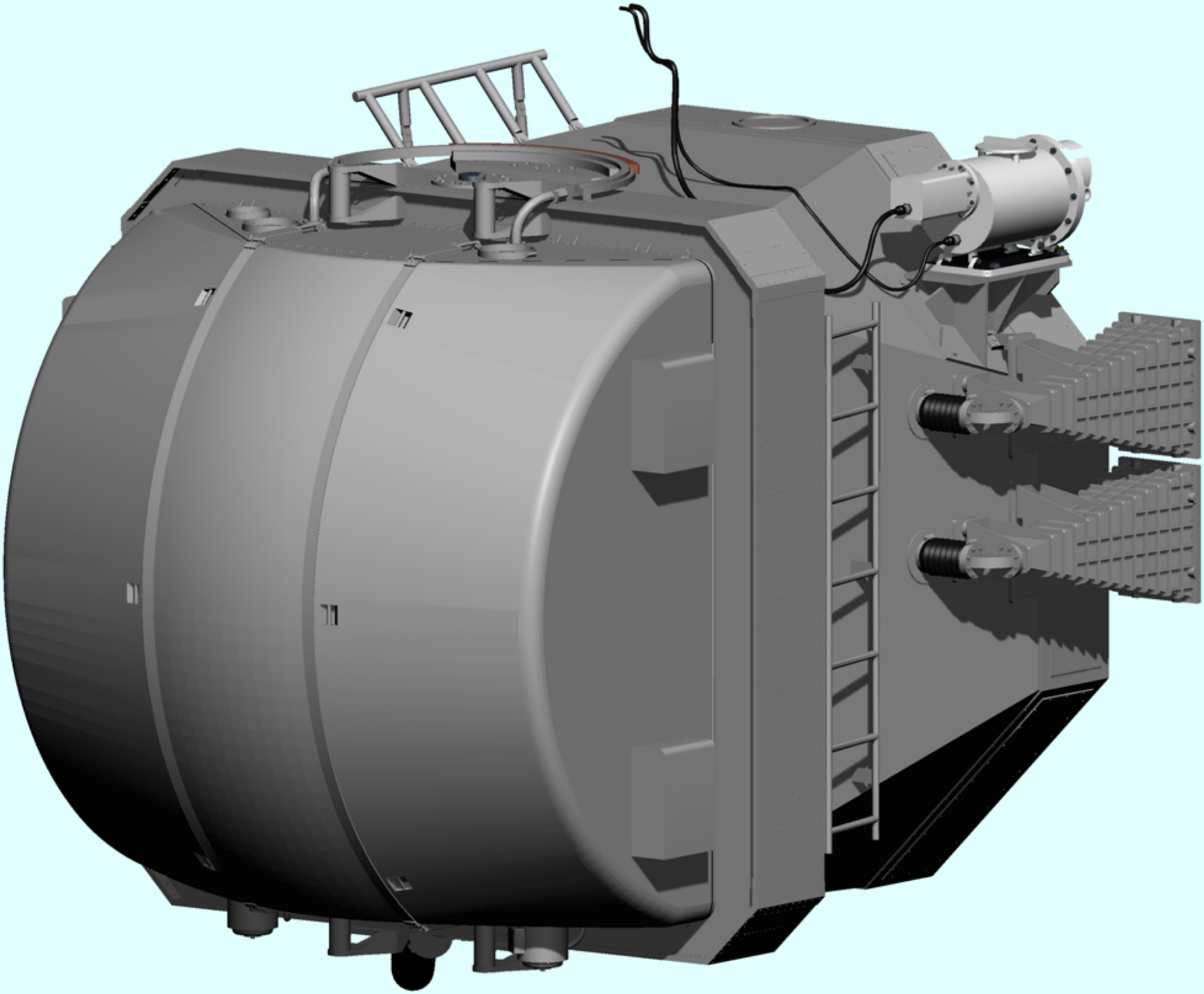

ANTENNA

Copyright © 2010 Phillip R. Hays

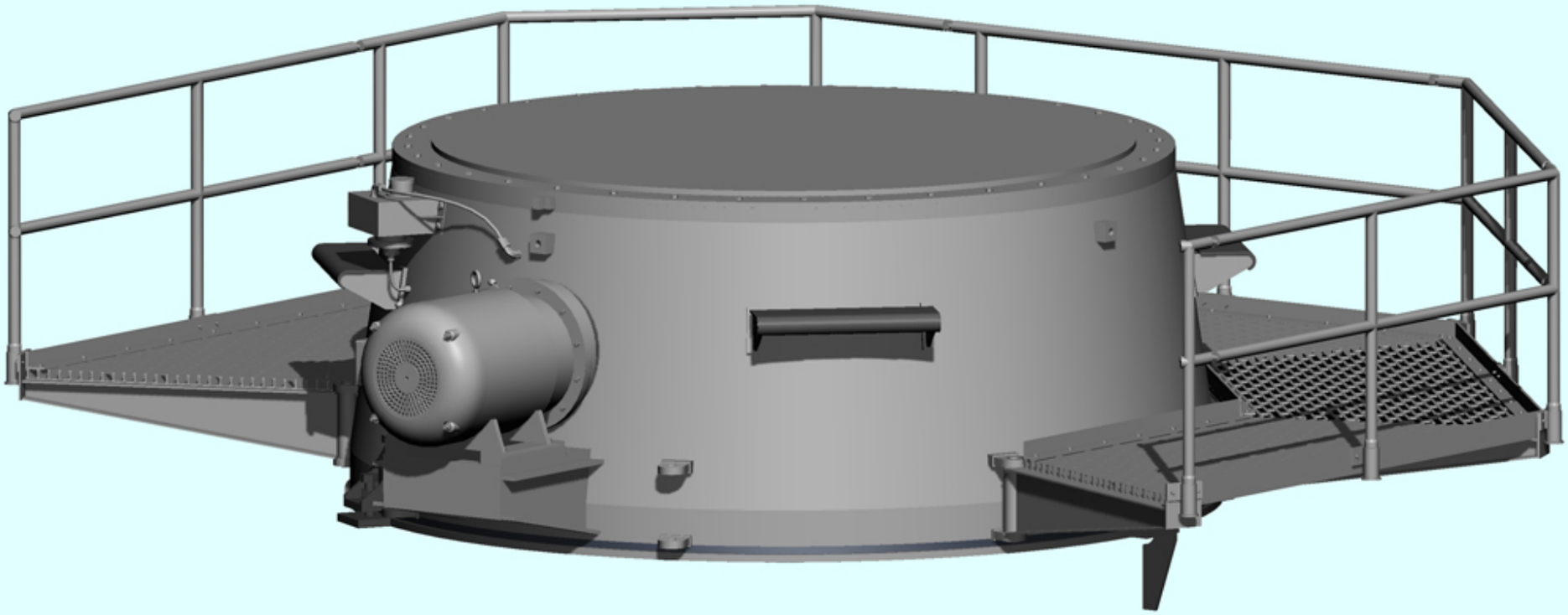

BASE

Copyright © 2010 Phillip R. Hays

GIMBAL

Copyright © 2010 Phillip R. Hays

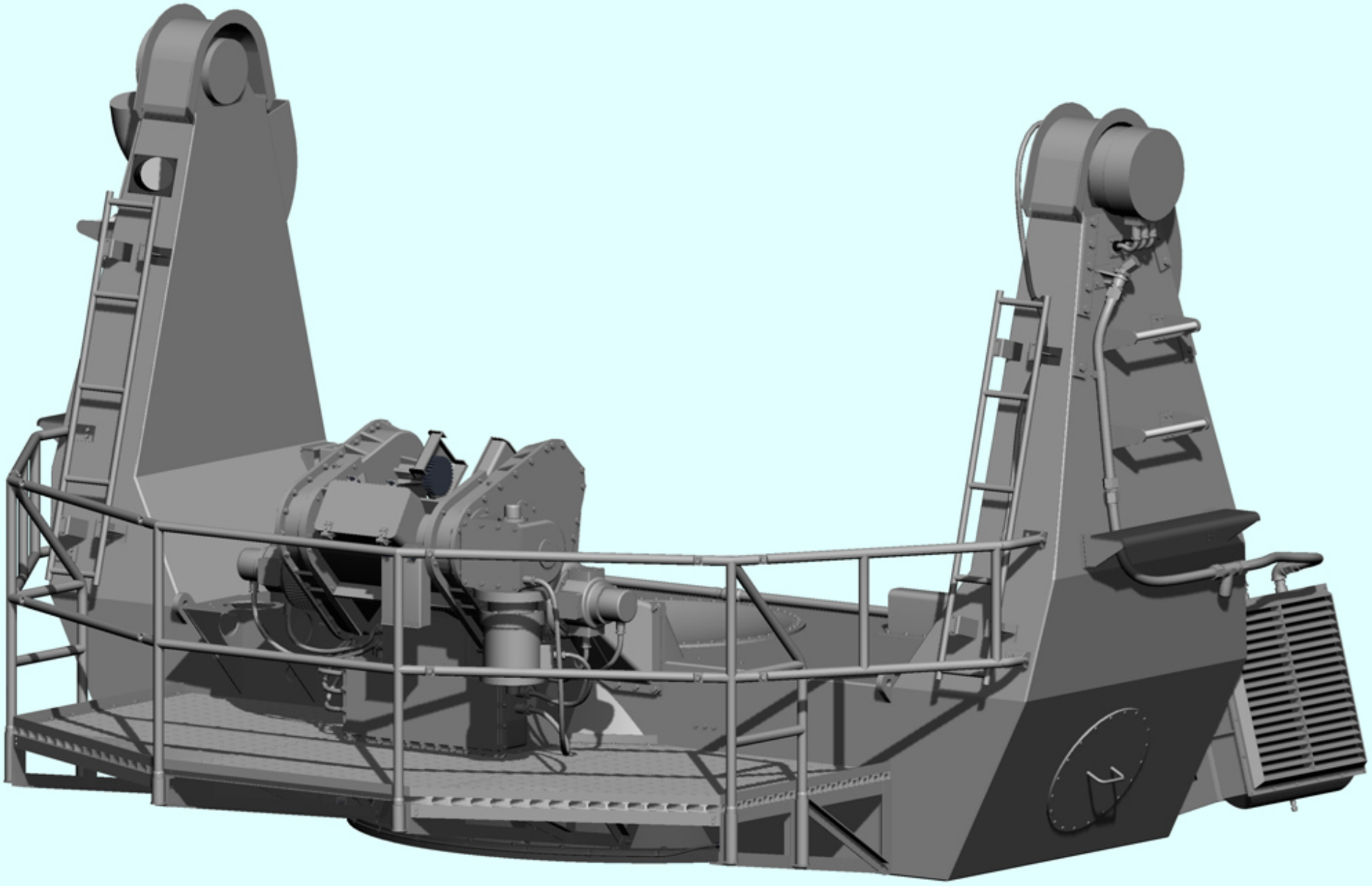

YOKE

Copyright © 2010 Phillip R. Hays

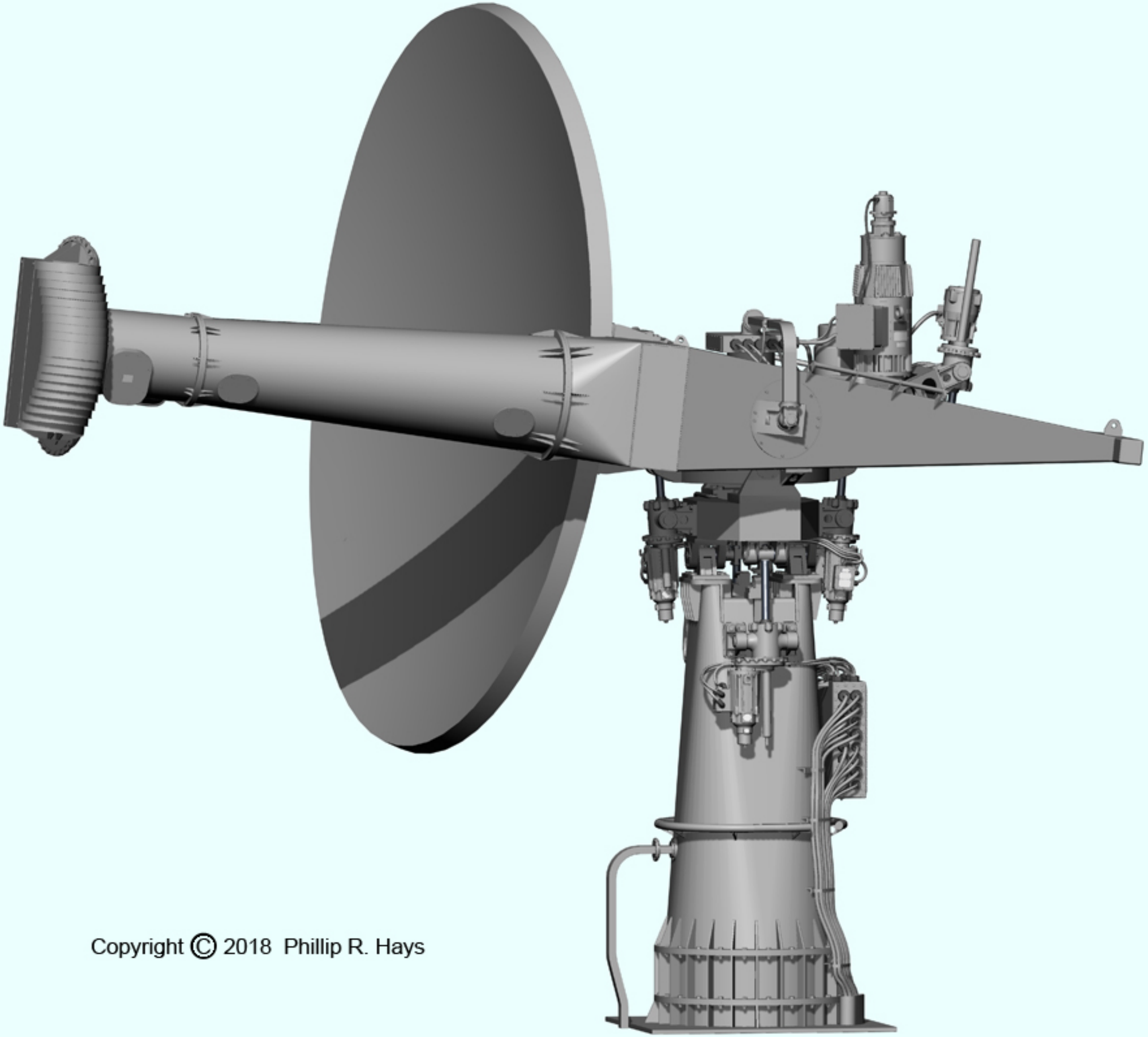

Copyright © 2018 Phillip R. Hays

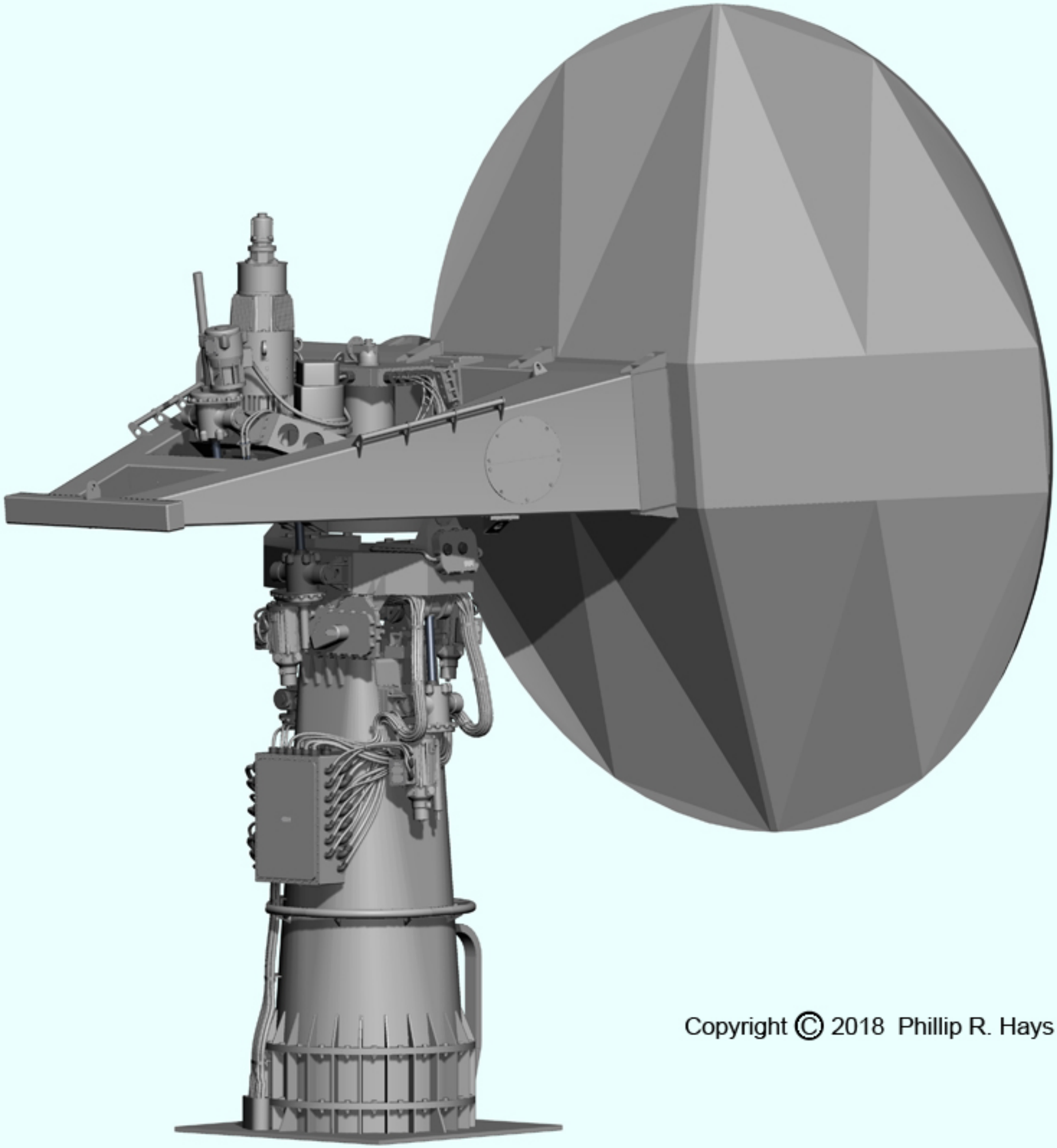

Copyright © 2018 Phillip R. Hays

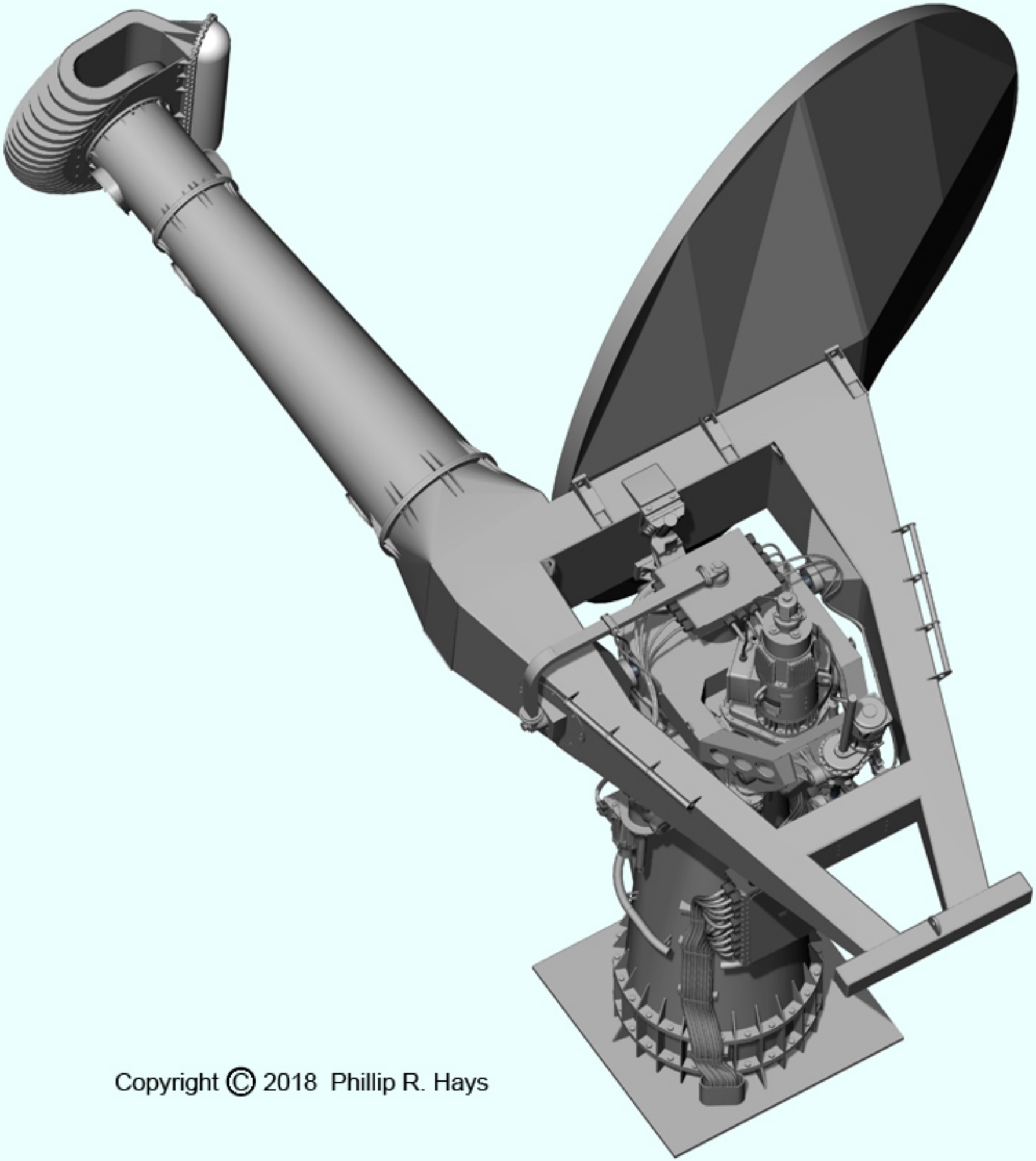

Copyright © 2018 Phillip R. Hays

Copyright © 2018 Phillip R. Hays

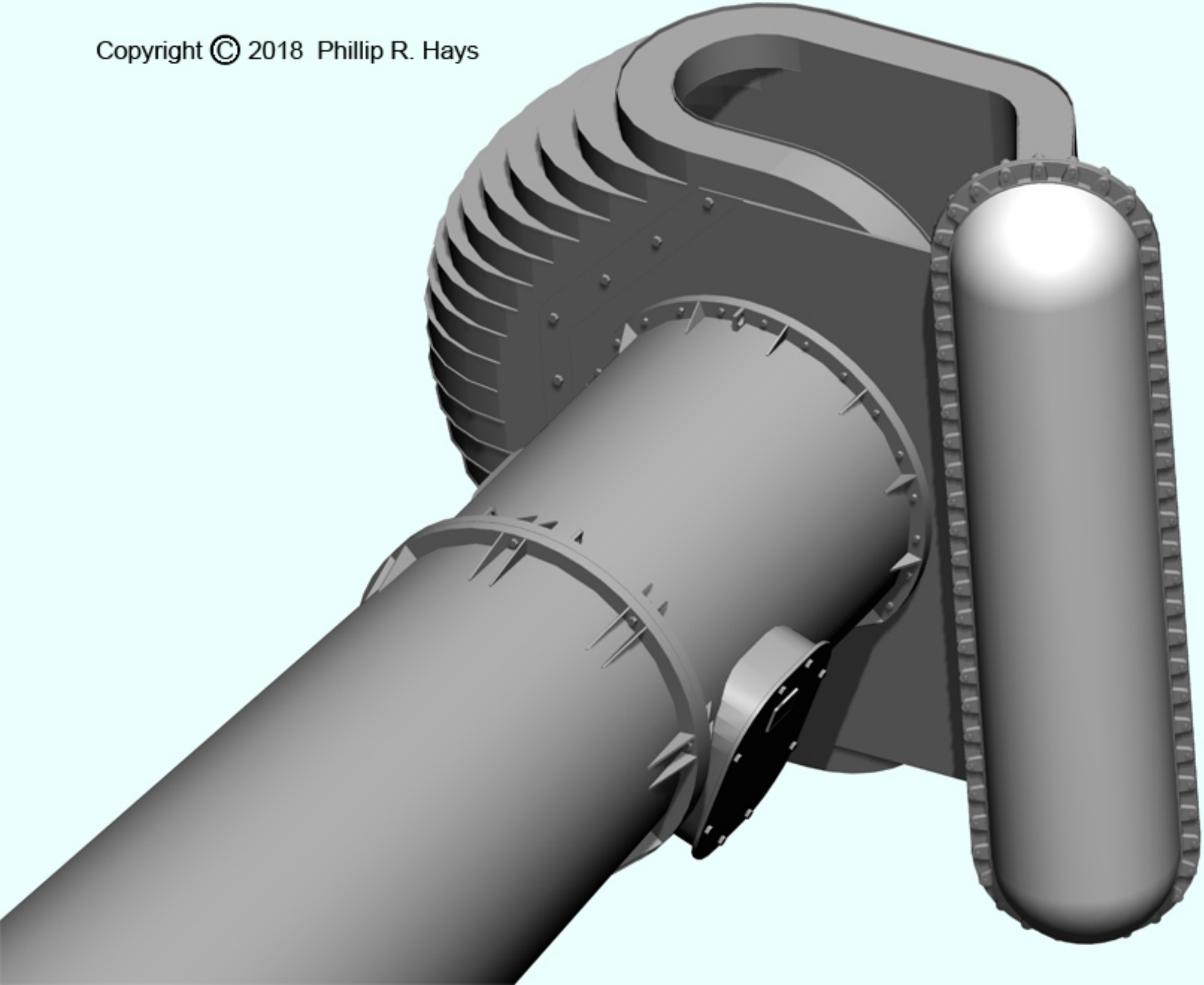

Copyright © 2018 Phillip R. Hays

DRIVE PLATFORM

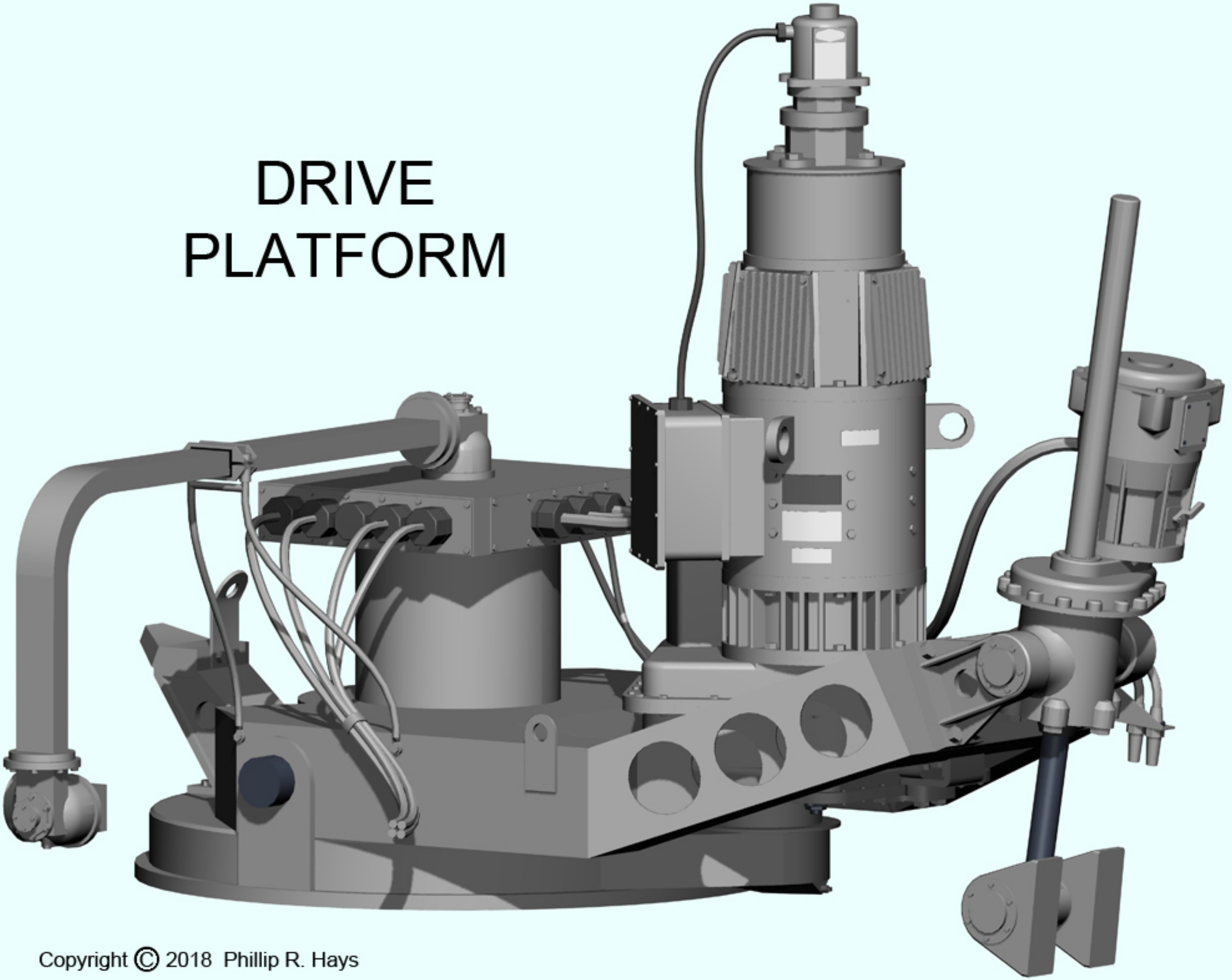

Copyright © 2018 Phillip R. Hays

PEDESTAL

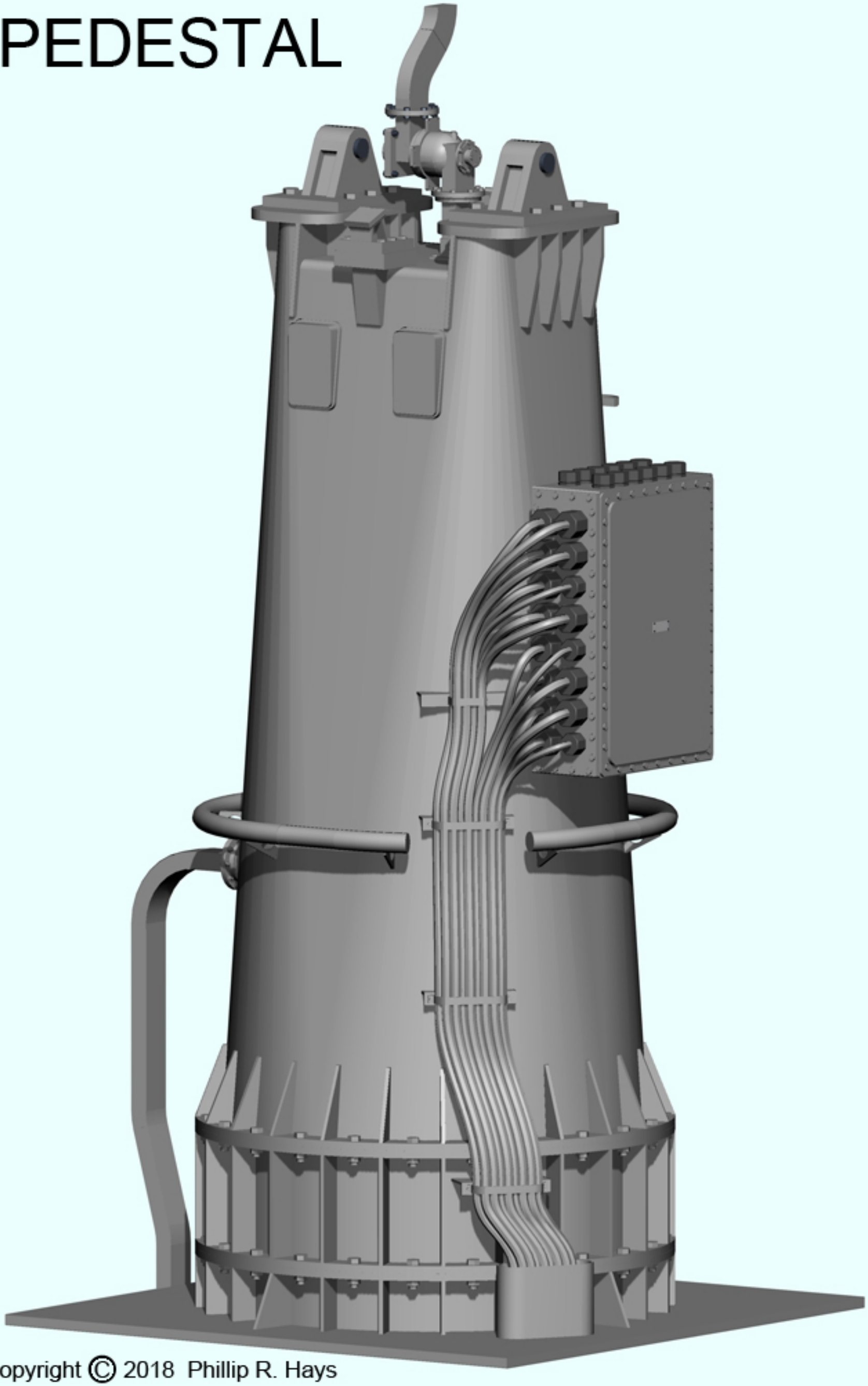

Copyright © 2018 Phillip R. Hays

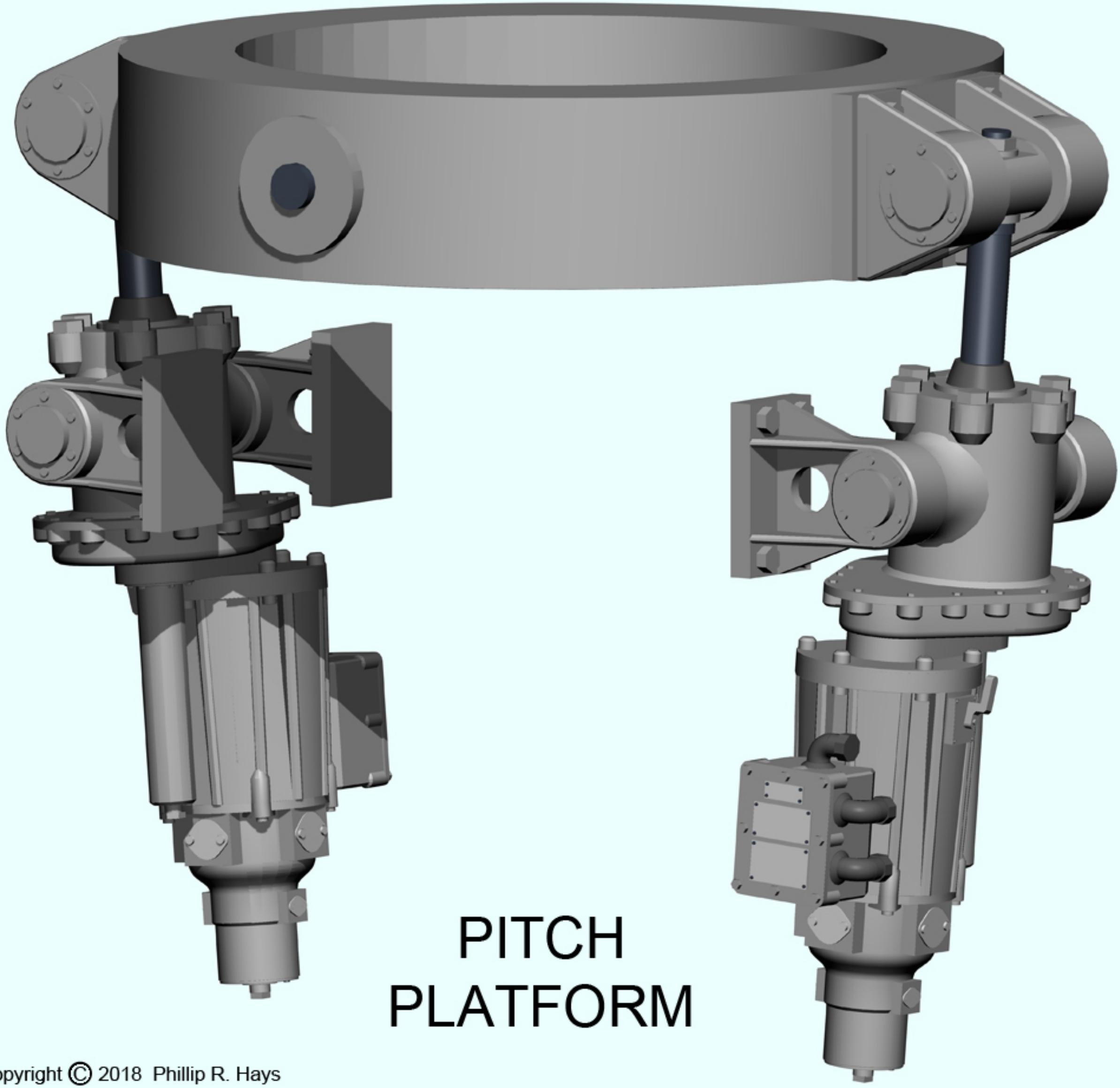

PITCH PLATFORM

Copyright © 2018 Phillip R. Hays

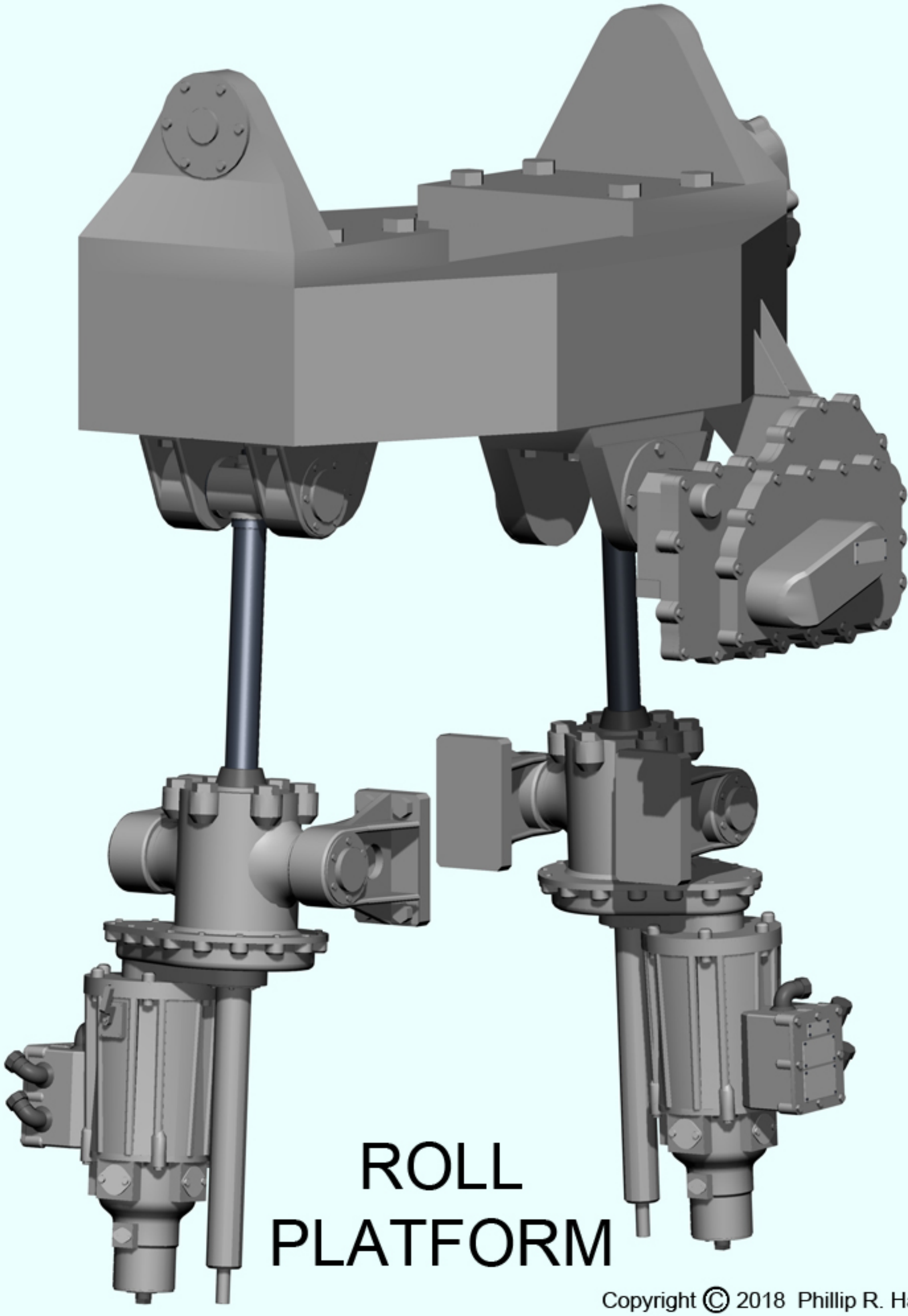

ROLL PLATFORM

Copyright © 2018 Phillip R. Hays

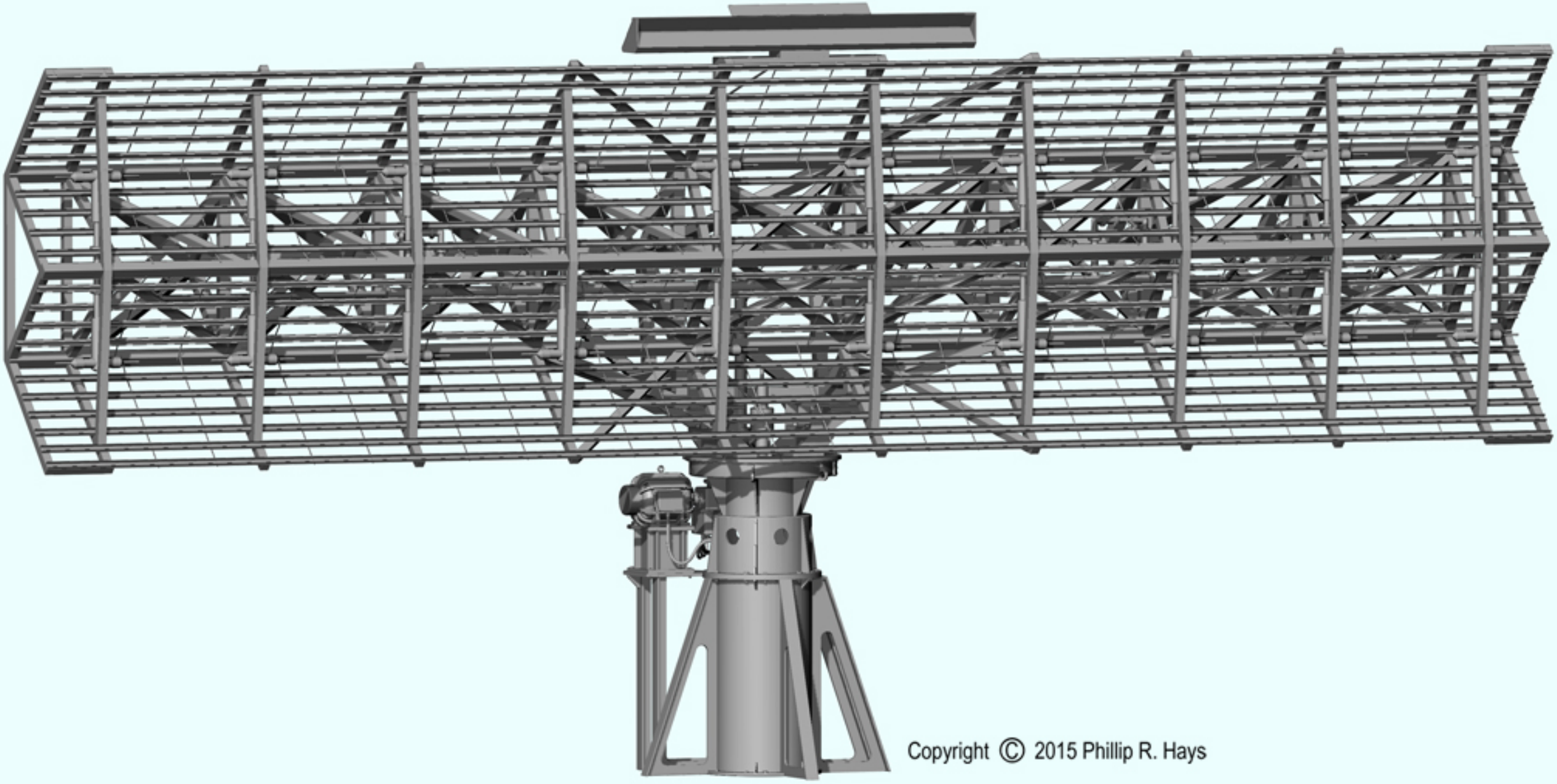

Copyright © 2015 Phillip R. Hays

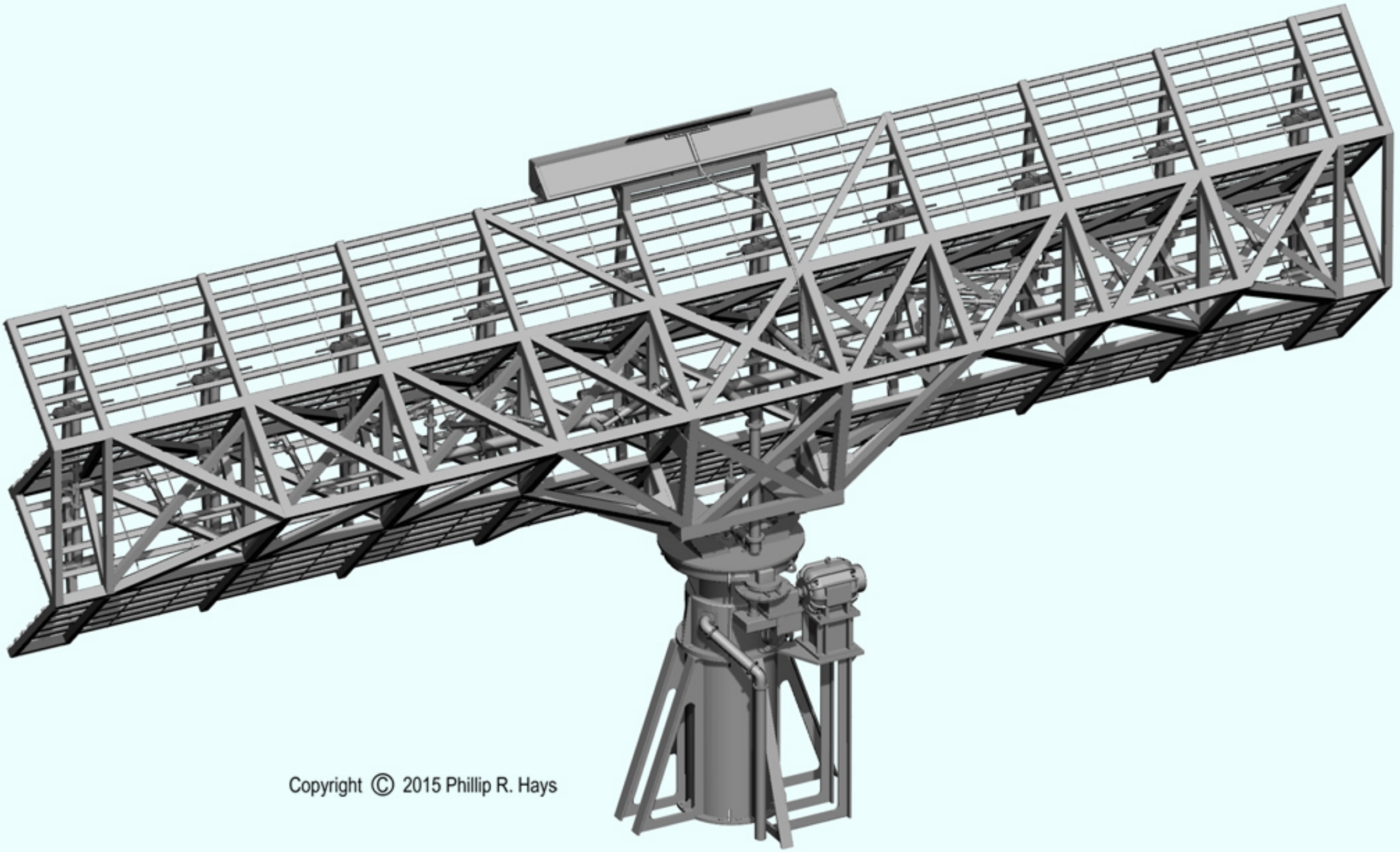

Copyright © 2015 Phillip R. Hays

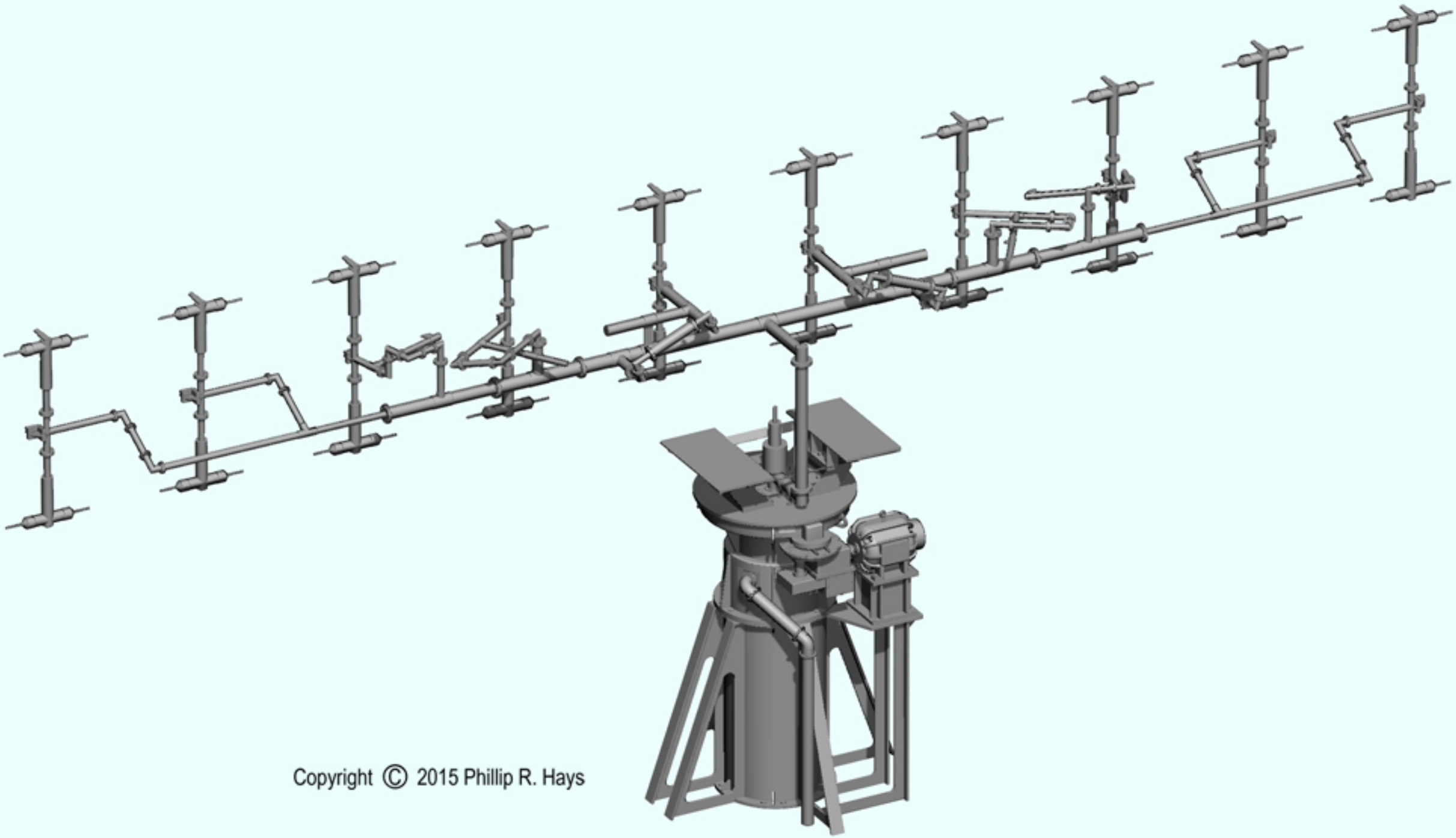

Copyright © 2015 Phillip R. Hays

Copyright © 2015 Phillip R. Hays

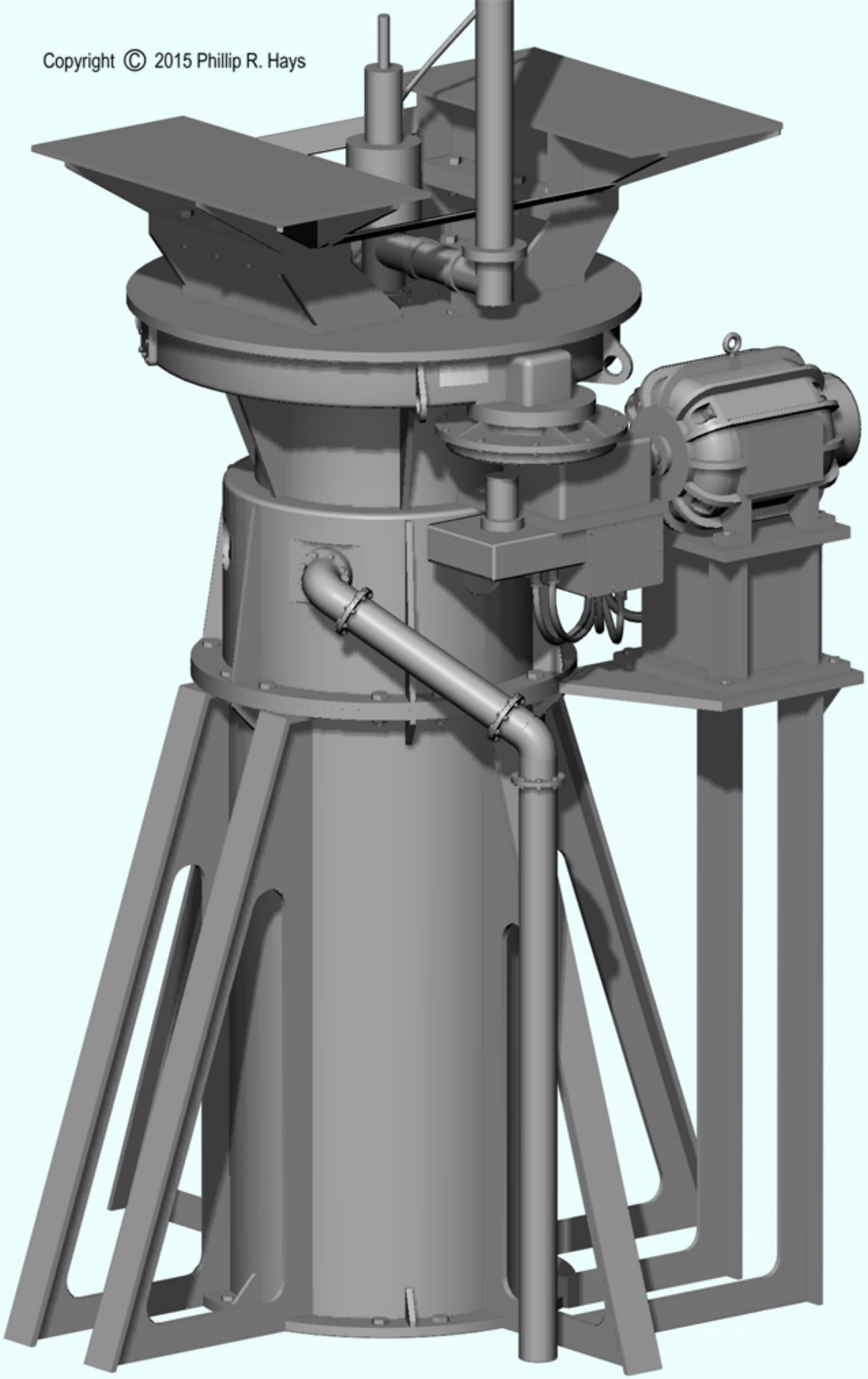

Copyright © 2015 Phillip R. Hays

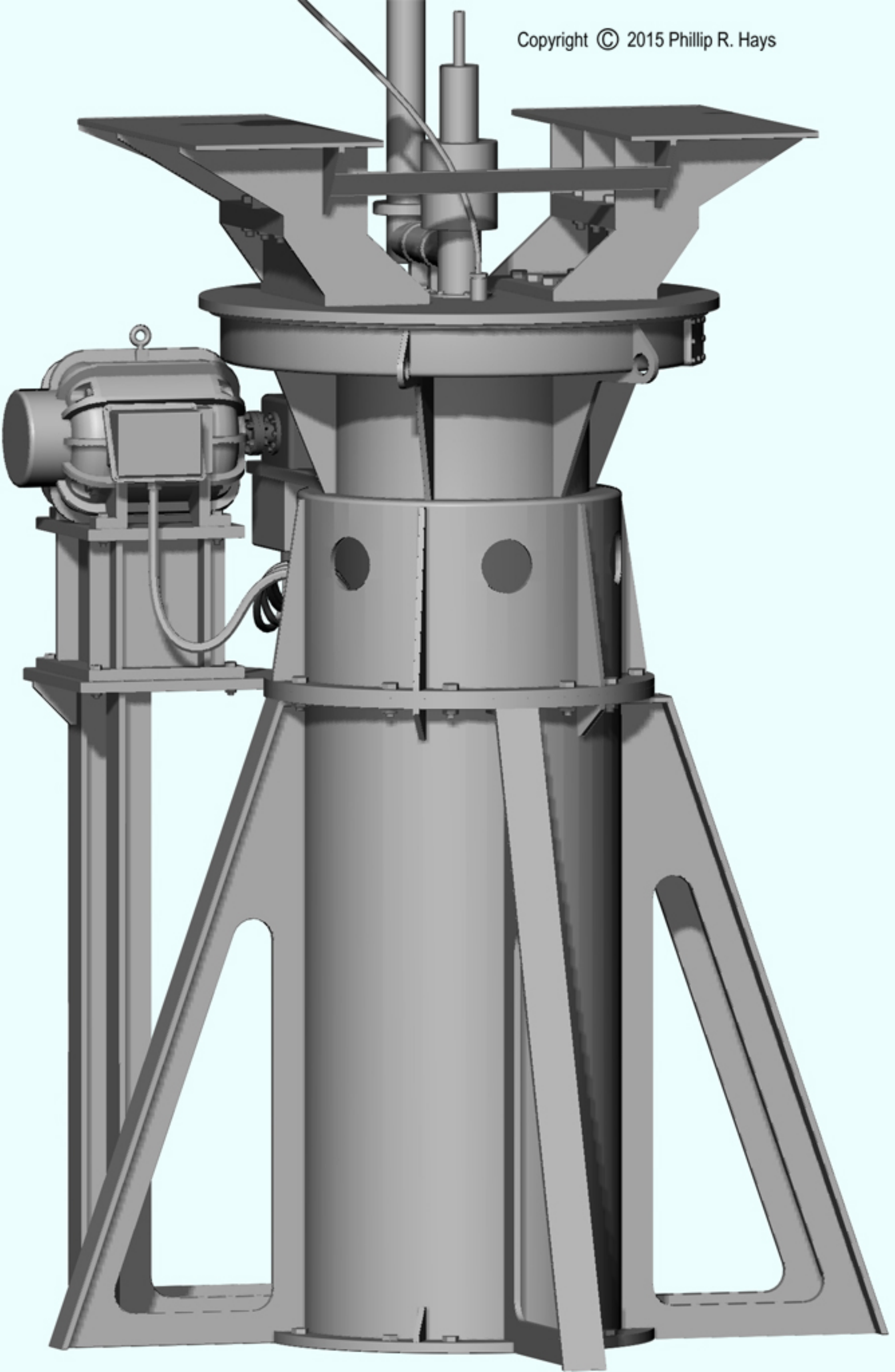

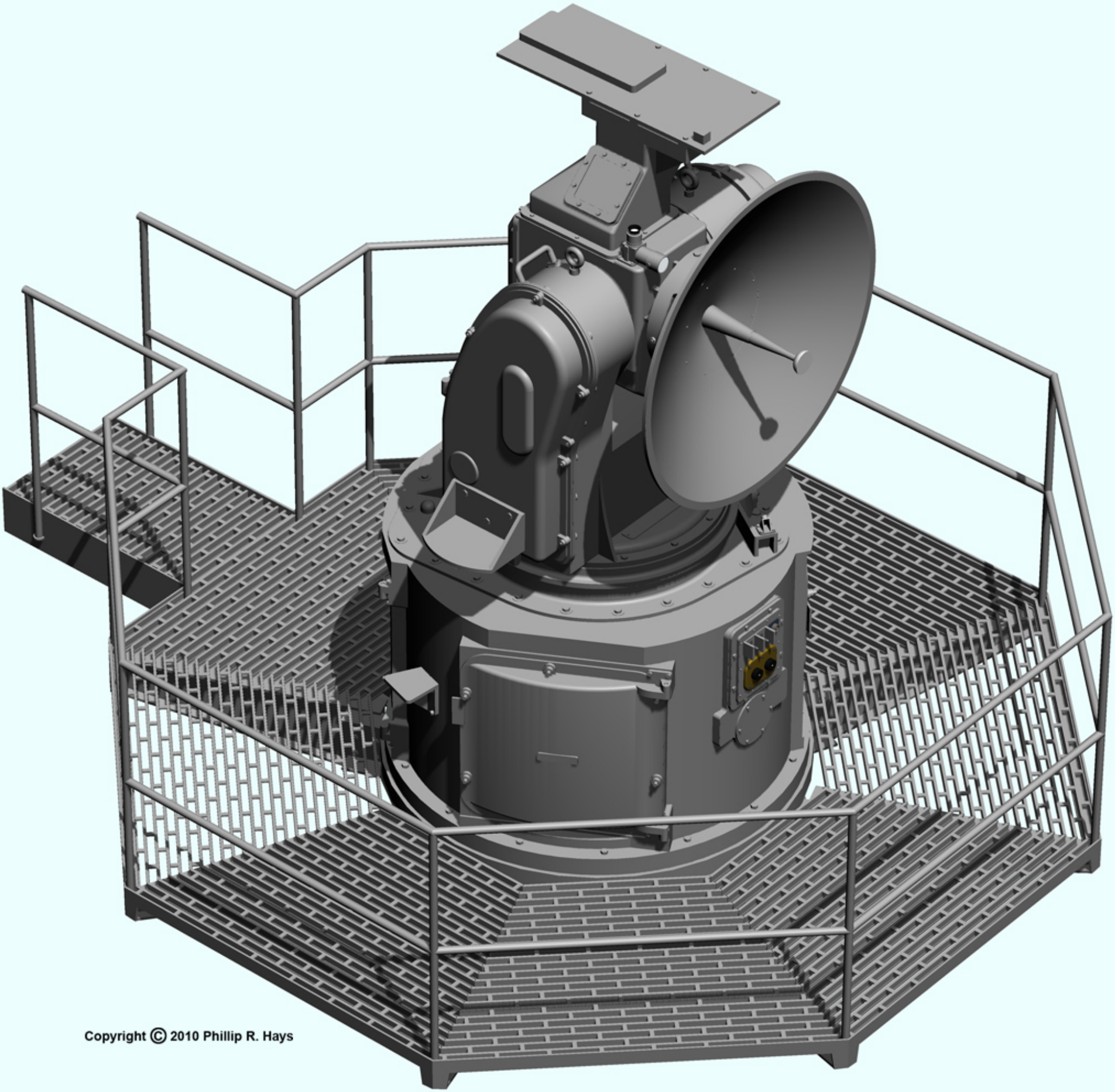

Copyright © 2010 Phillip R. Hays

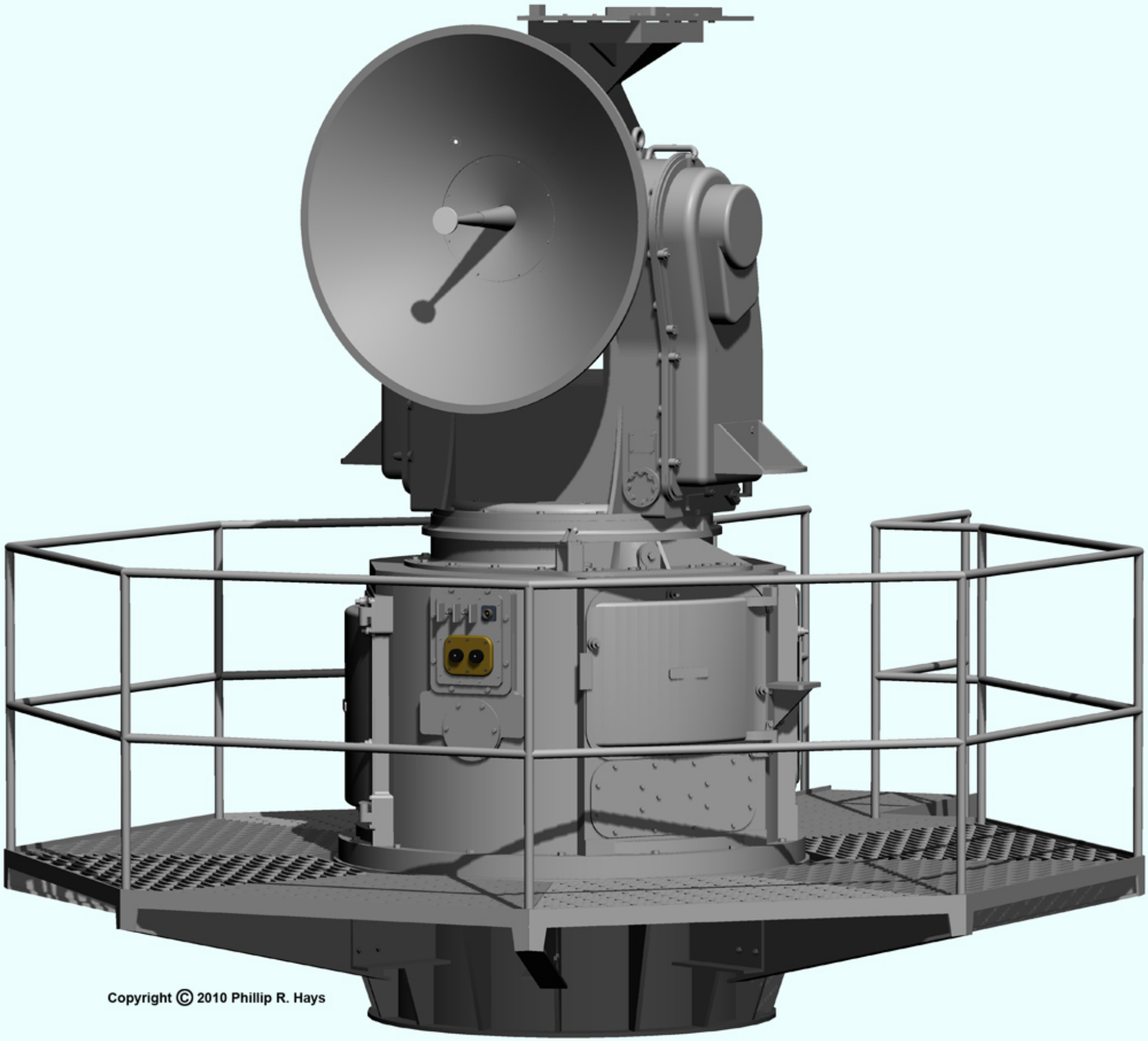

Copyright © 2010 Phillip R. Hays

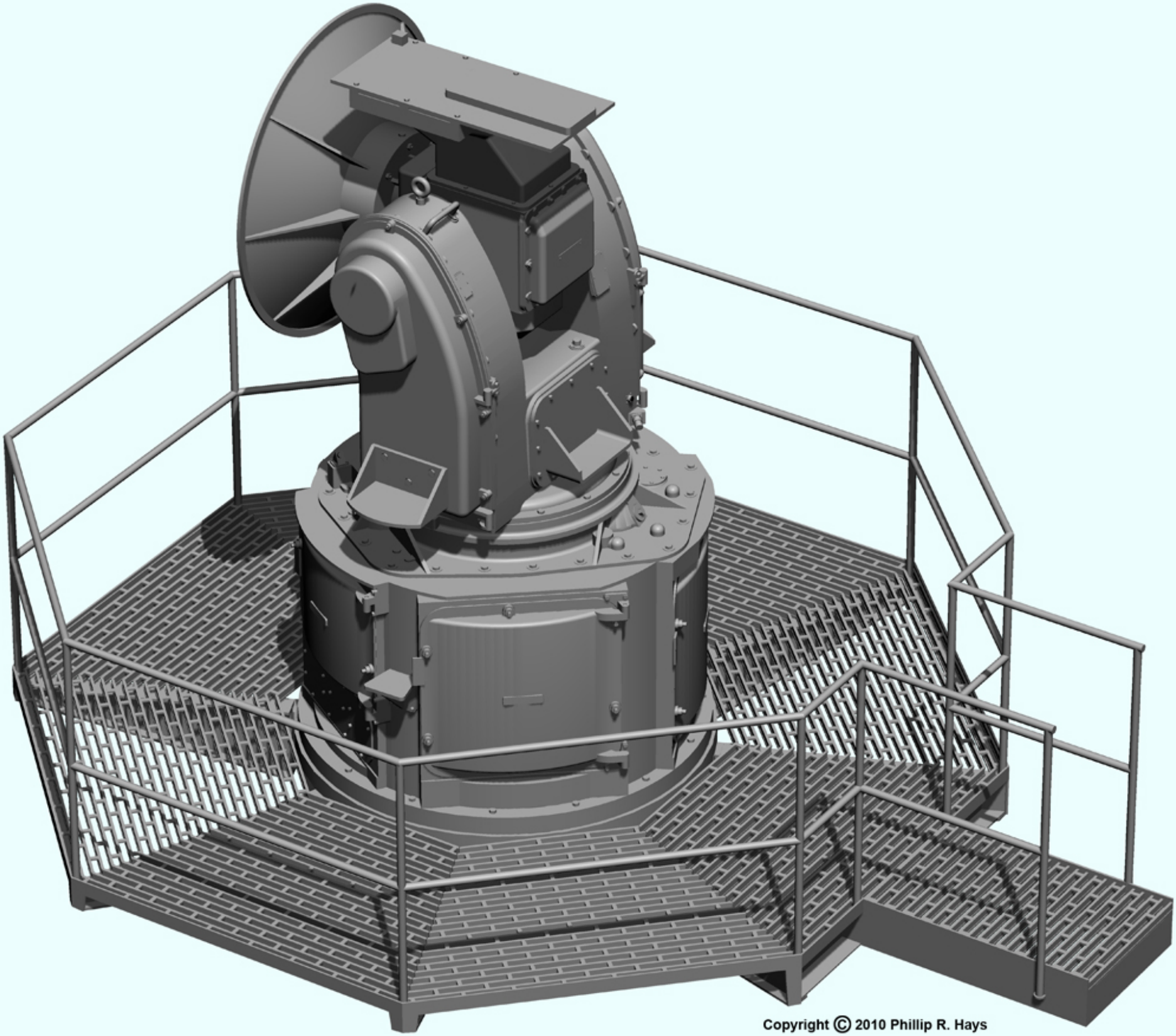
Copyright © 2010 Phillip R. Hays

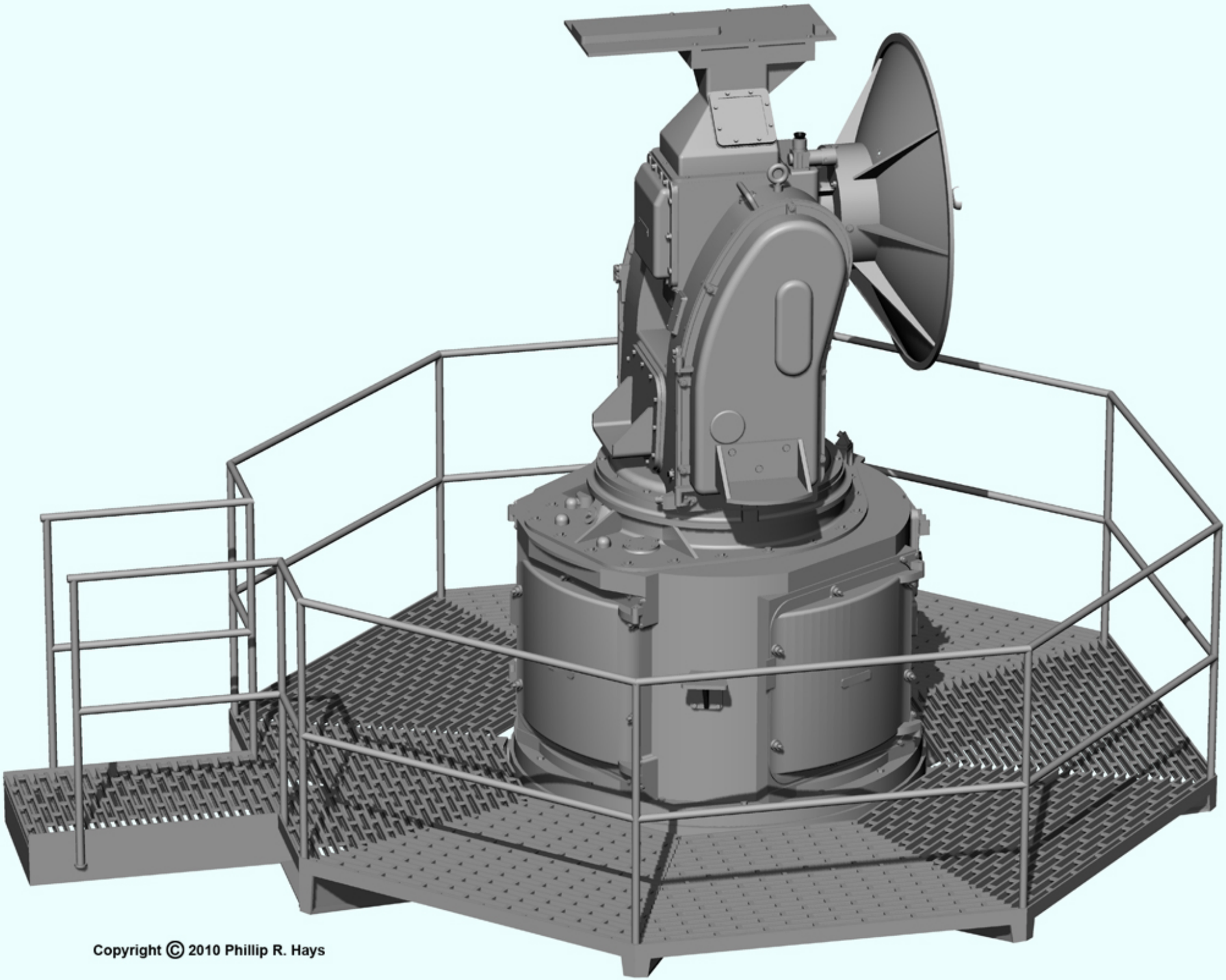

Copyright © 2010 Phillip R. Hays

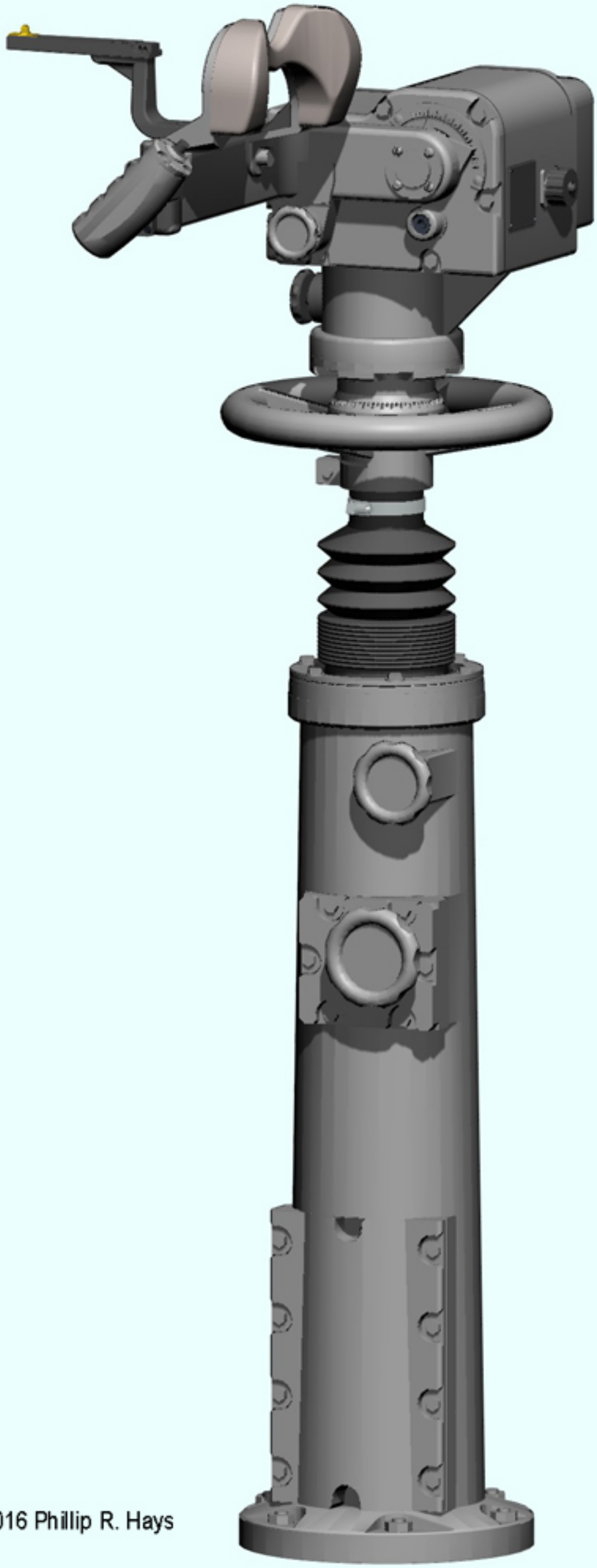

Copyright © 2016 Phillip R. Hays

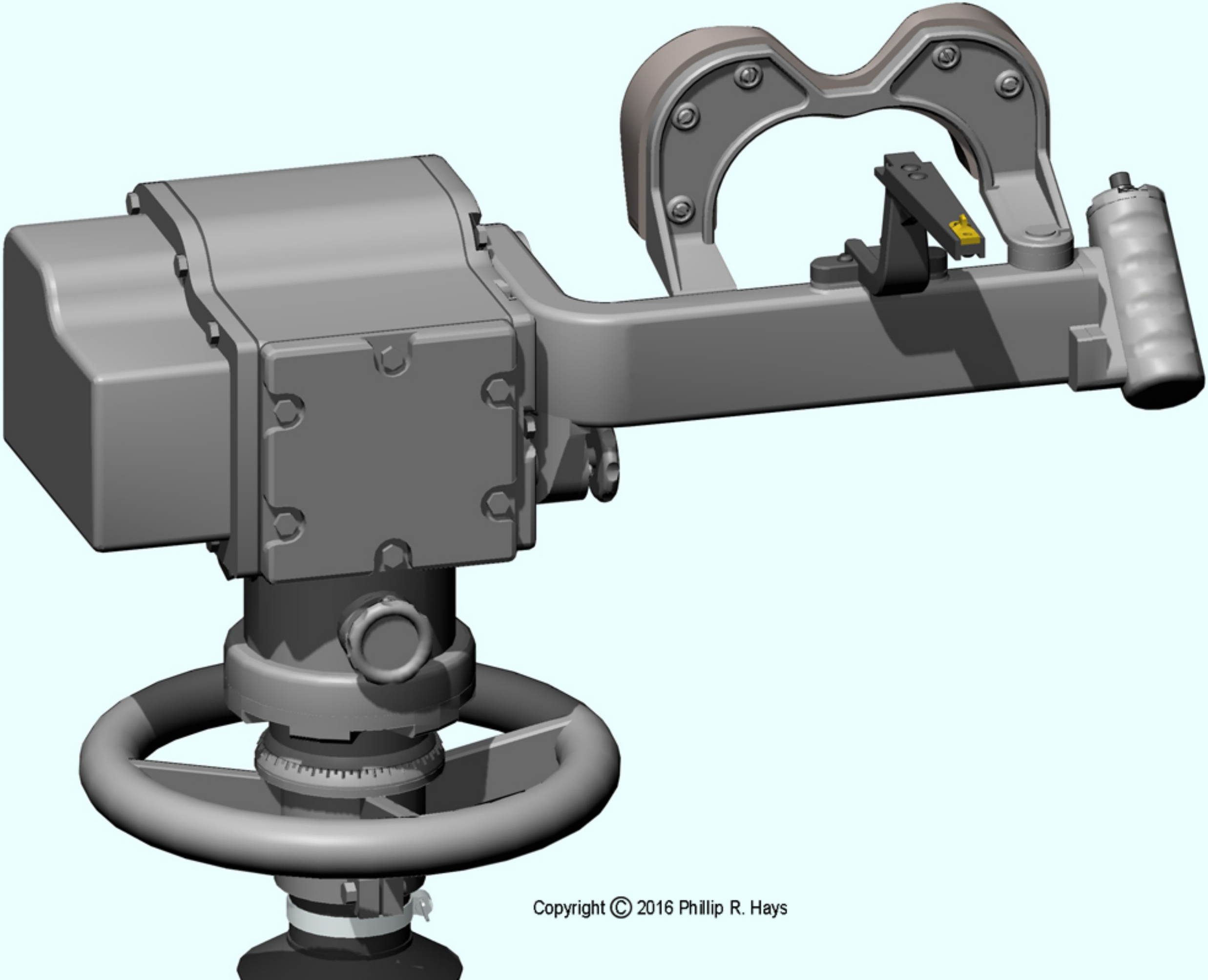

Copyright © 2016 Phillip R. Hays

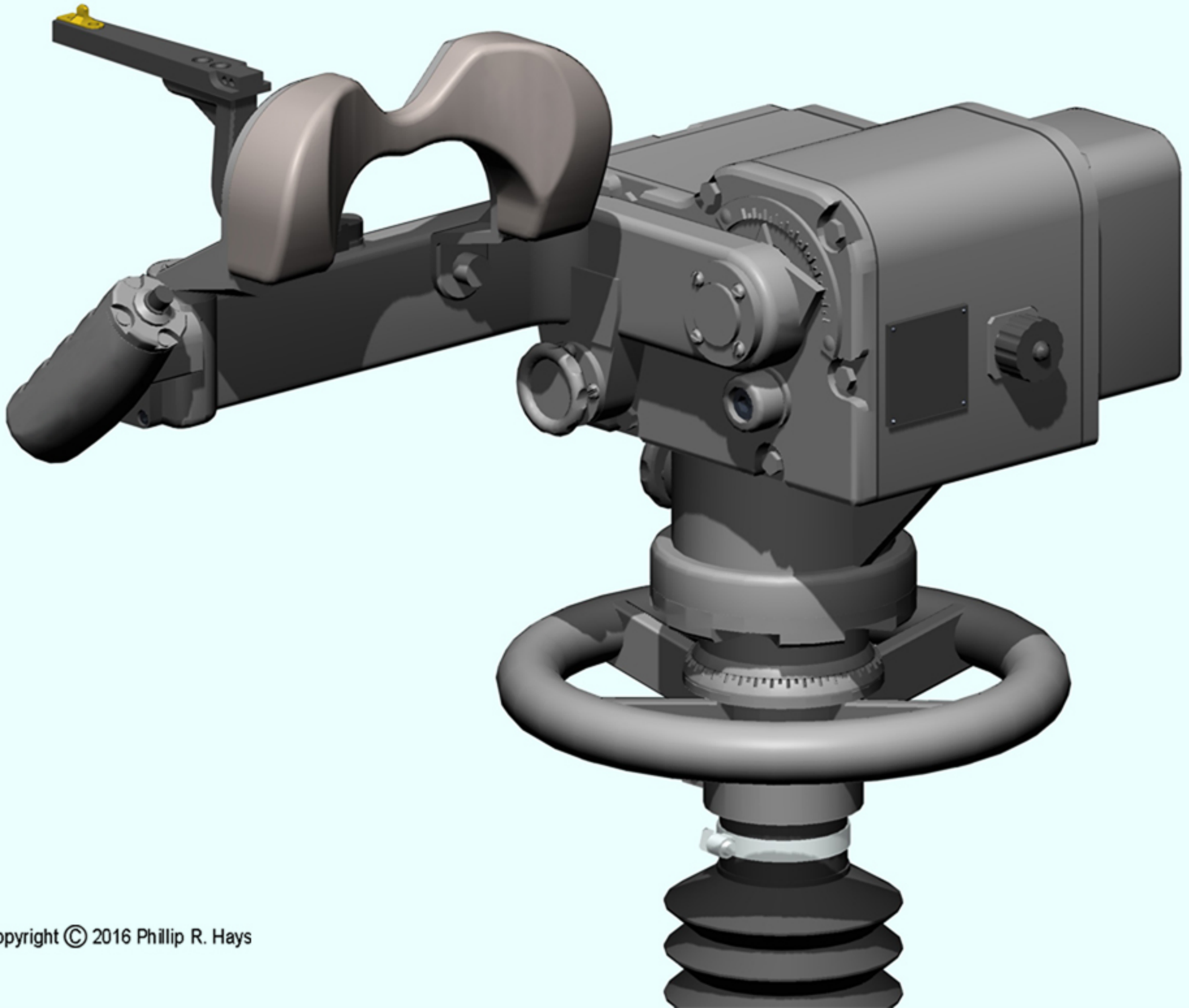

Copyright © 2016 Phillip R. Hays

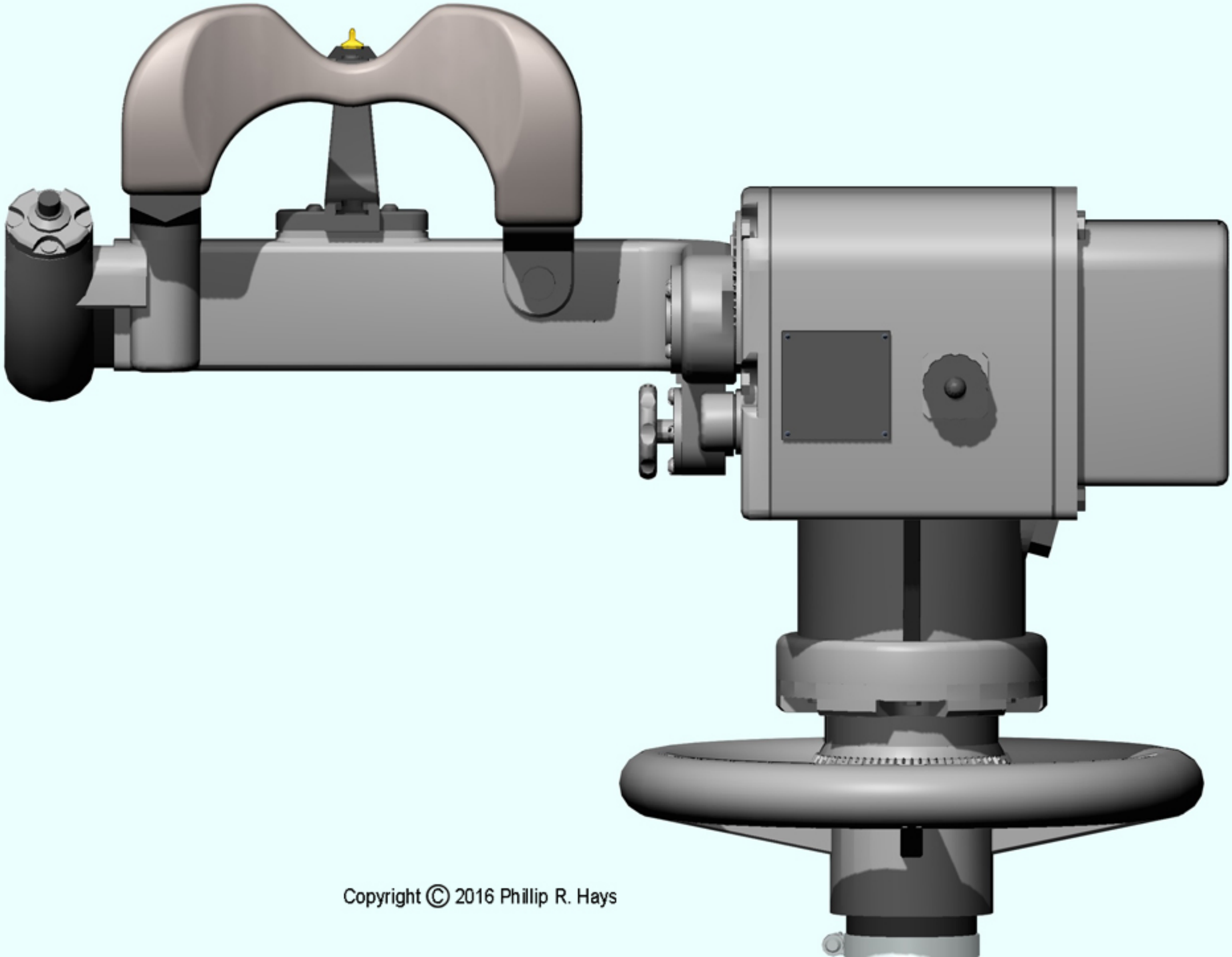

Copyright © 2016 Phillip R. Hays

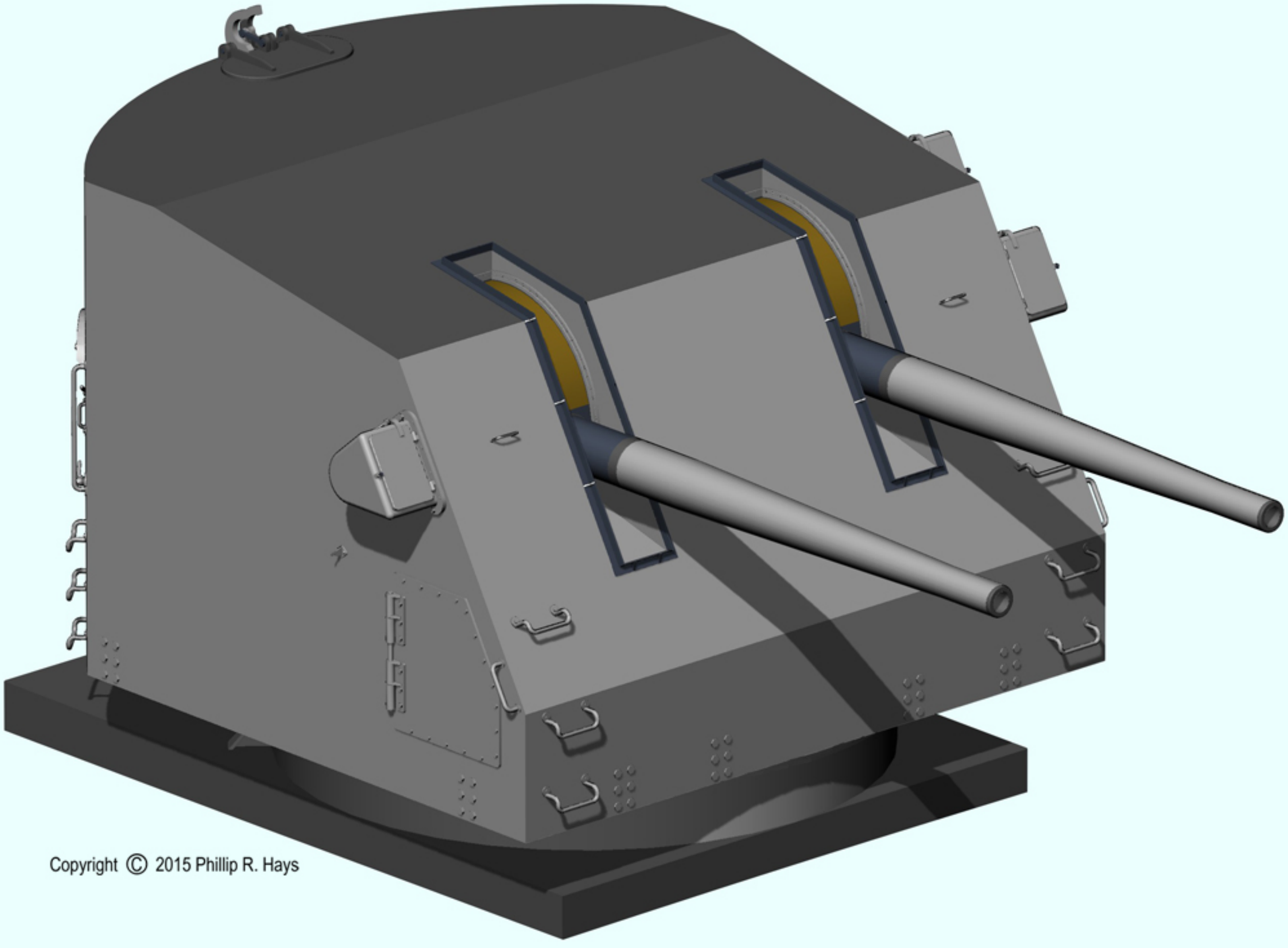

Copyright © 2015 Phillip R. Hays

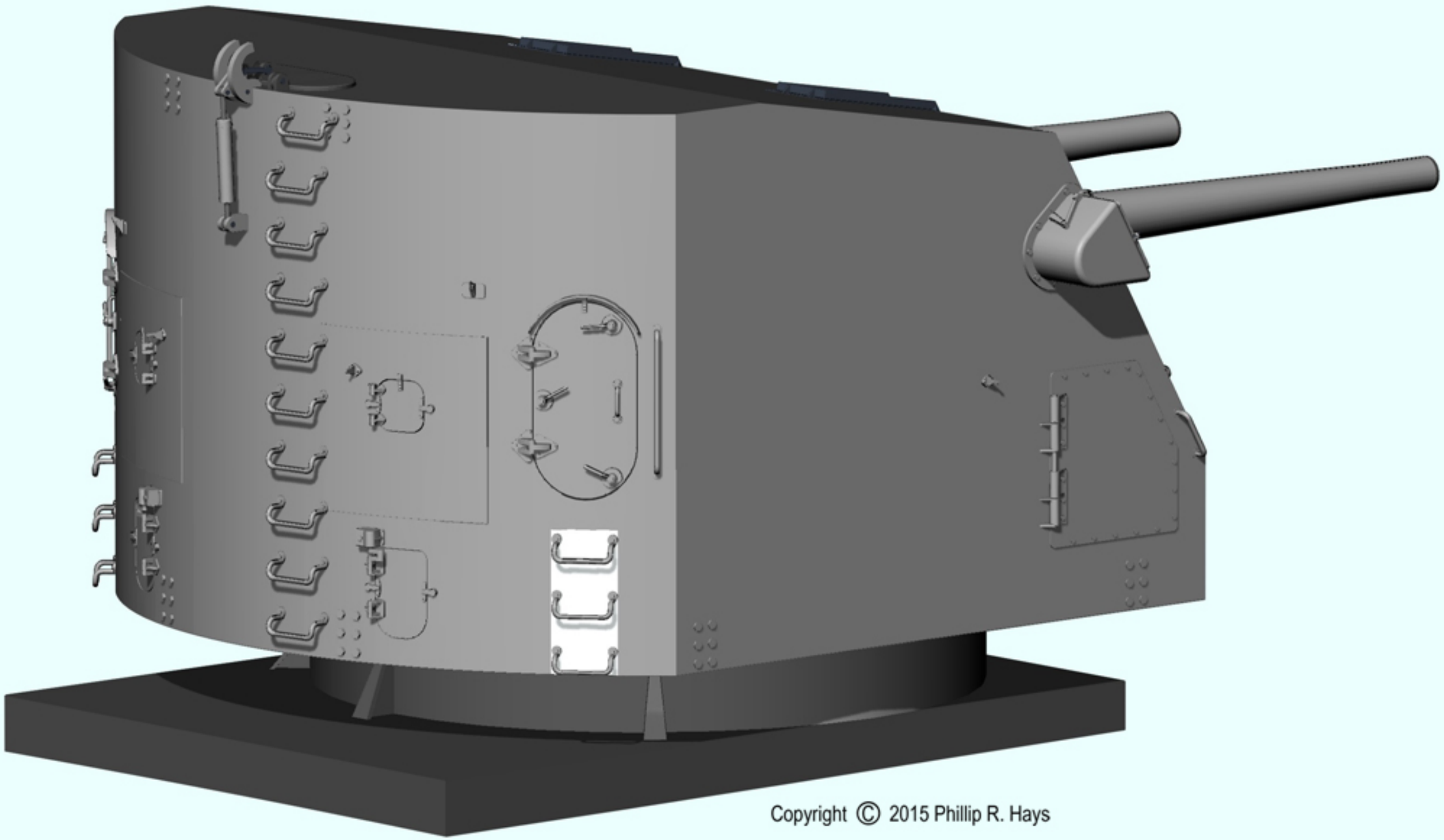

Copyright © 2015 Phillip R. Hays

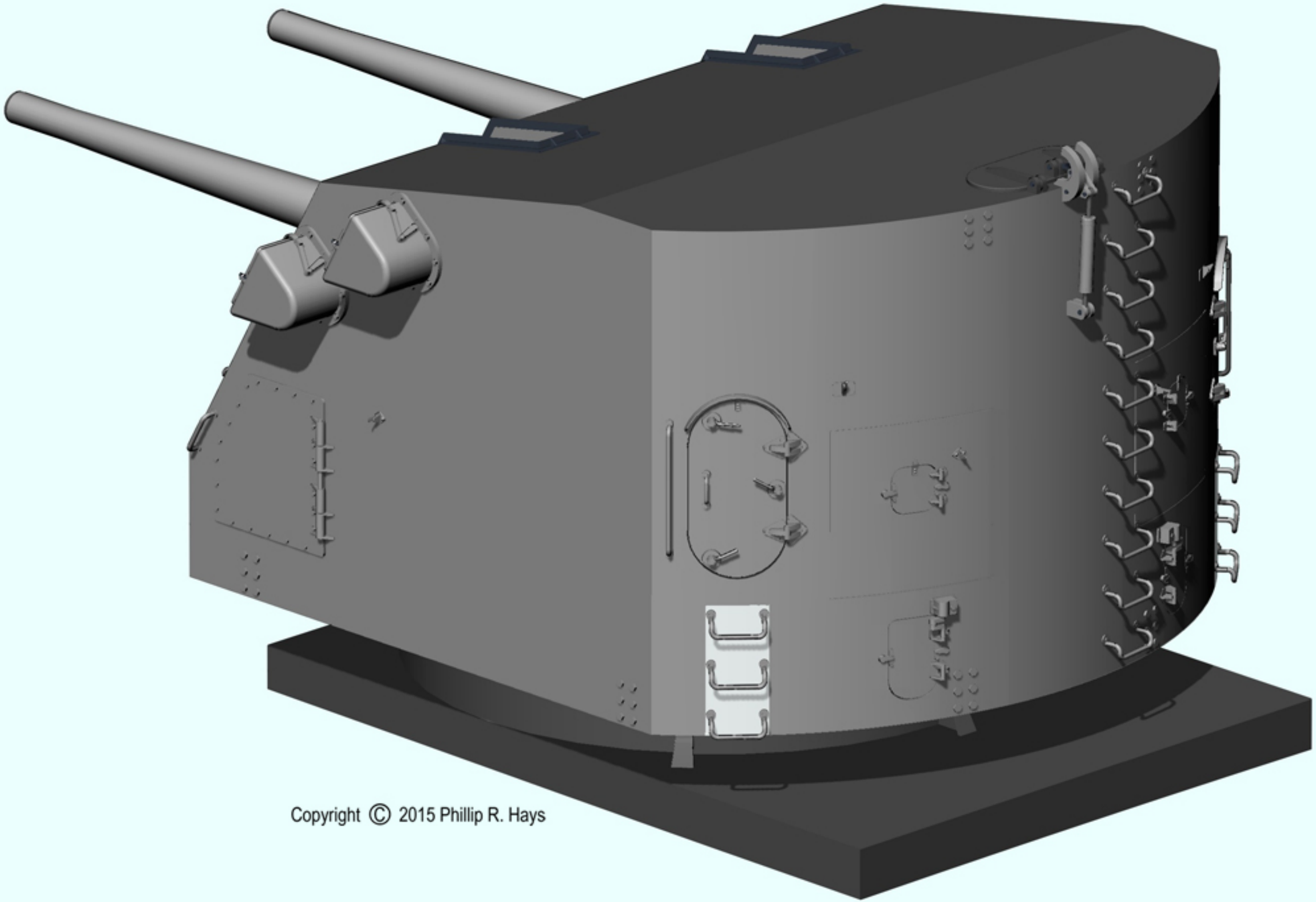

Copyright © 2015 Phillip R. Hays

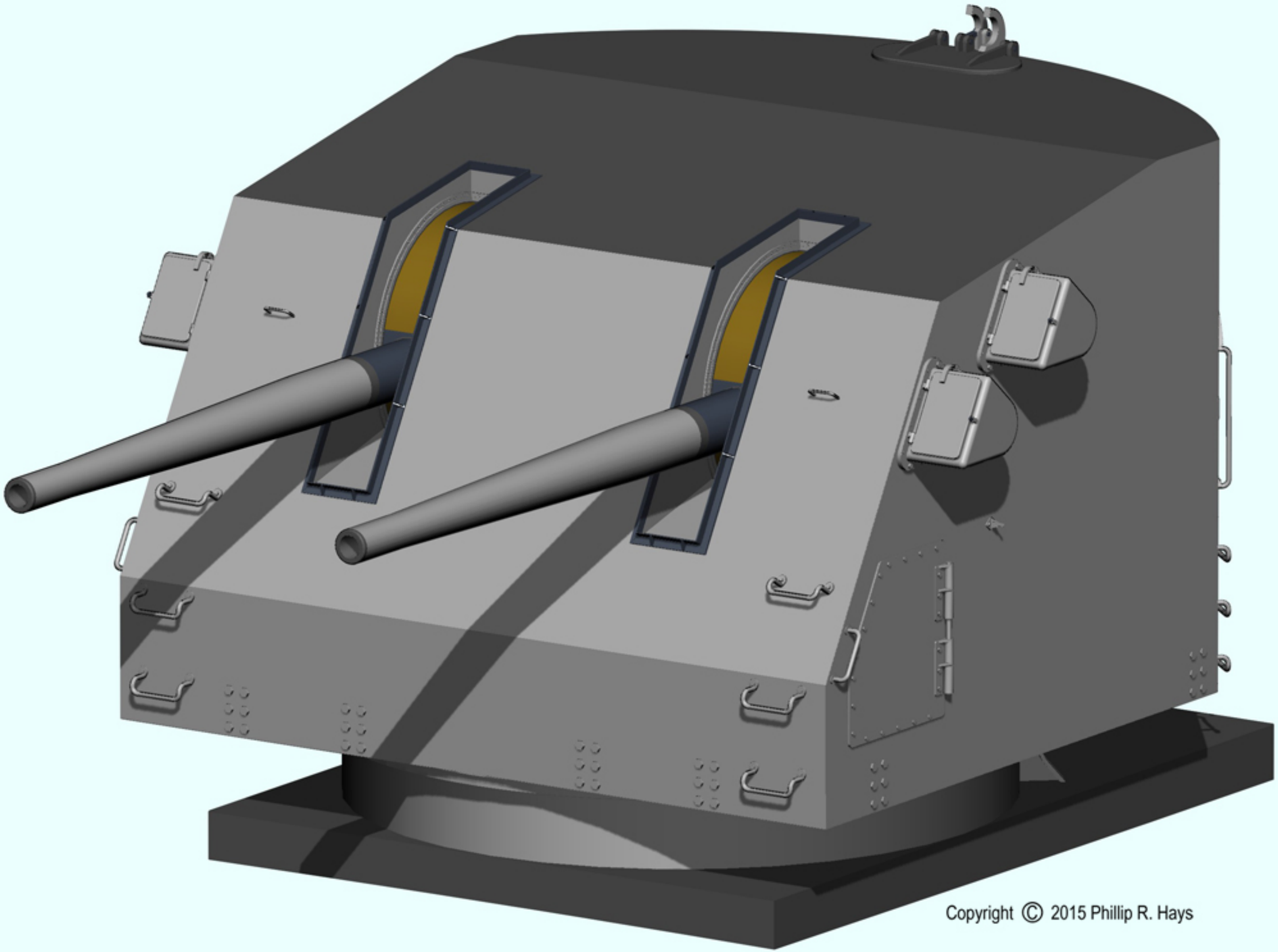

Copyright © 2015 Phillip R. Hays

Copyright © 2018 Phillip R. Hays

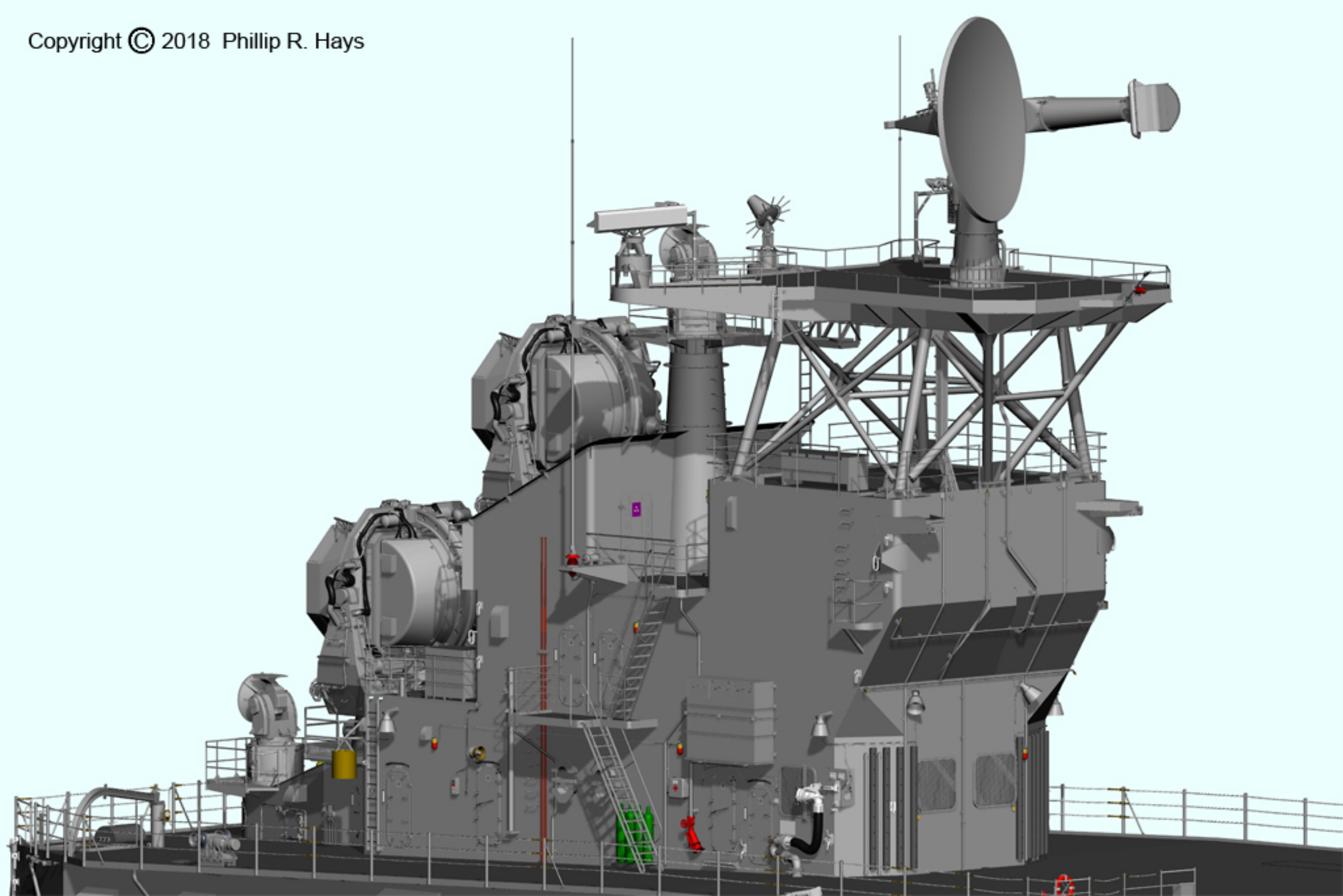

Copyright © 2018 Phillip R. Hays

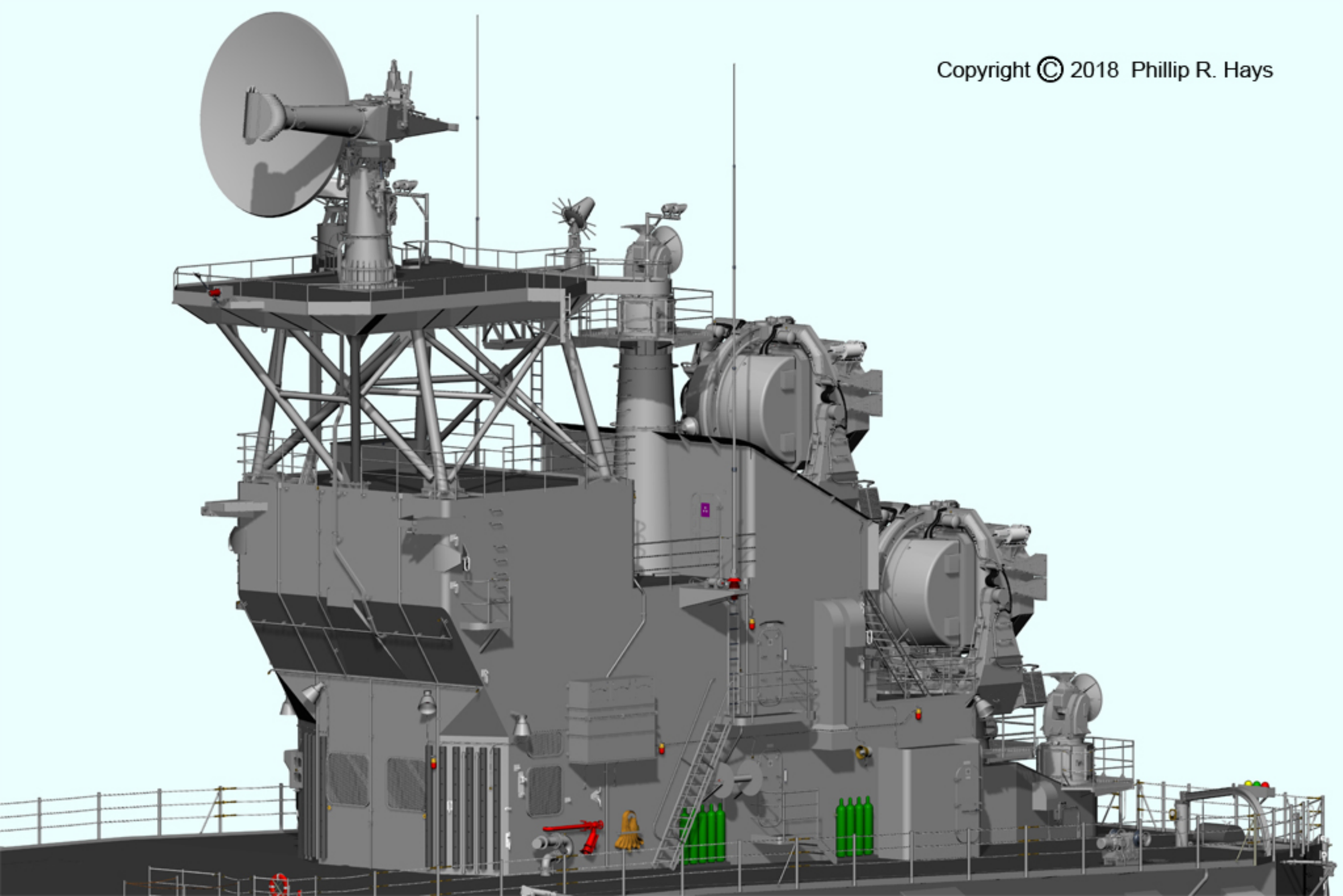

Copyright © 2018 Phillip R. Hays

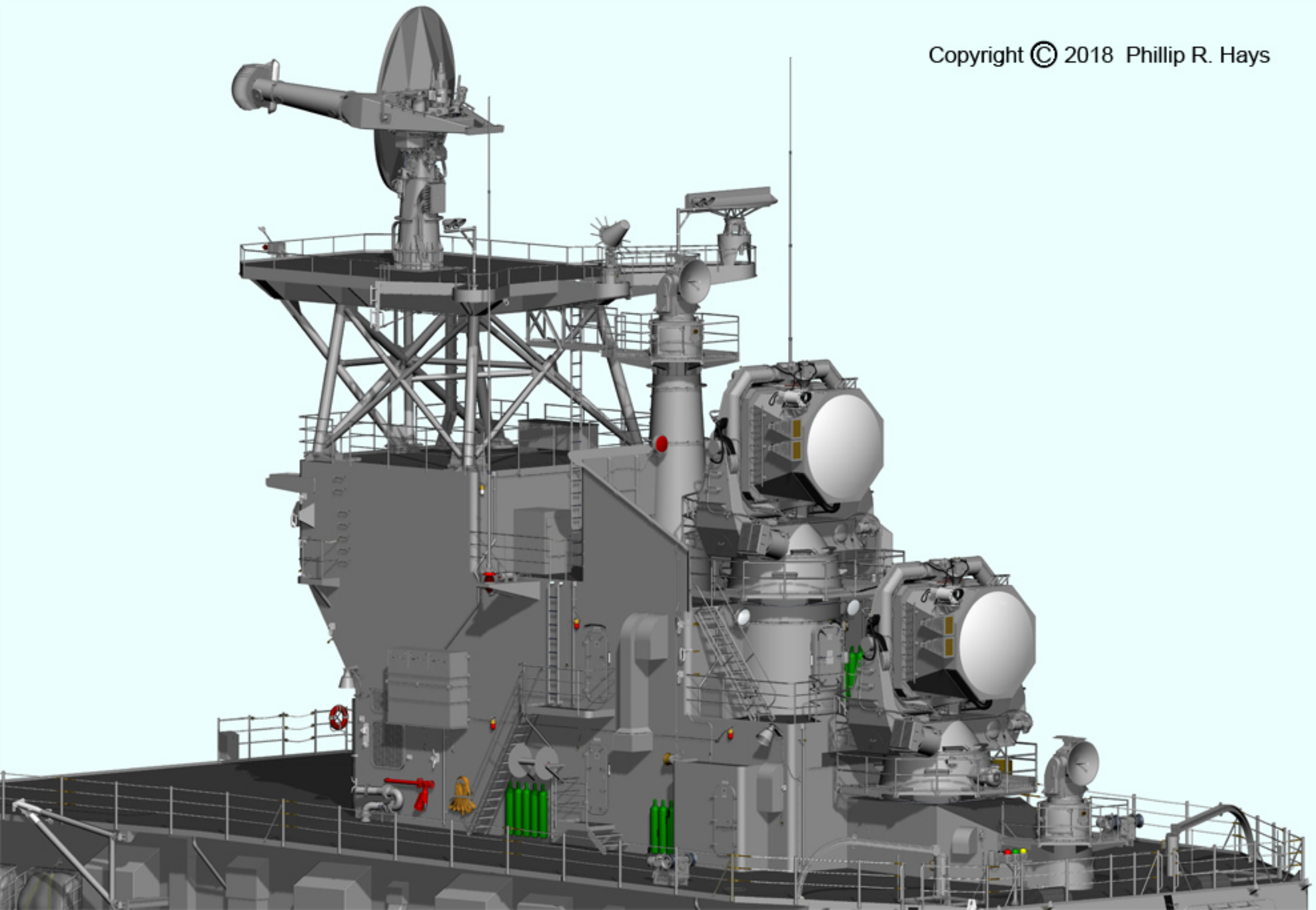

Copyright © 2018 Phillip R. Hays

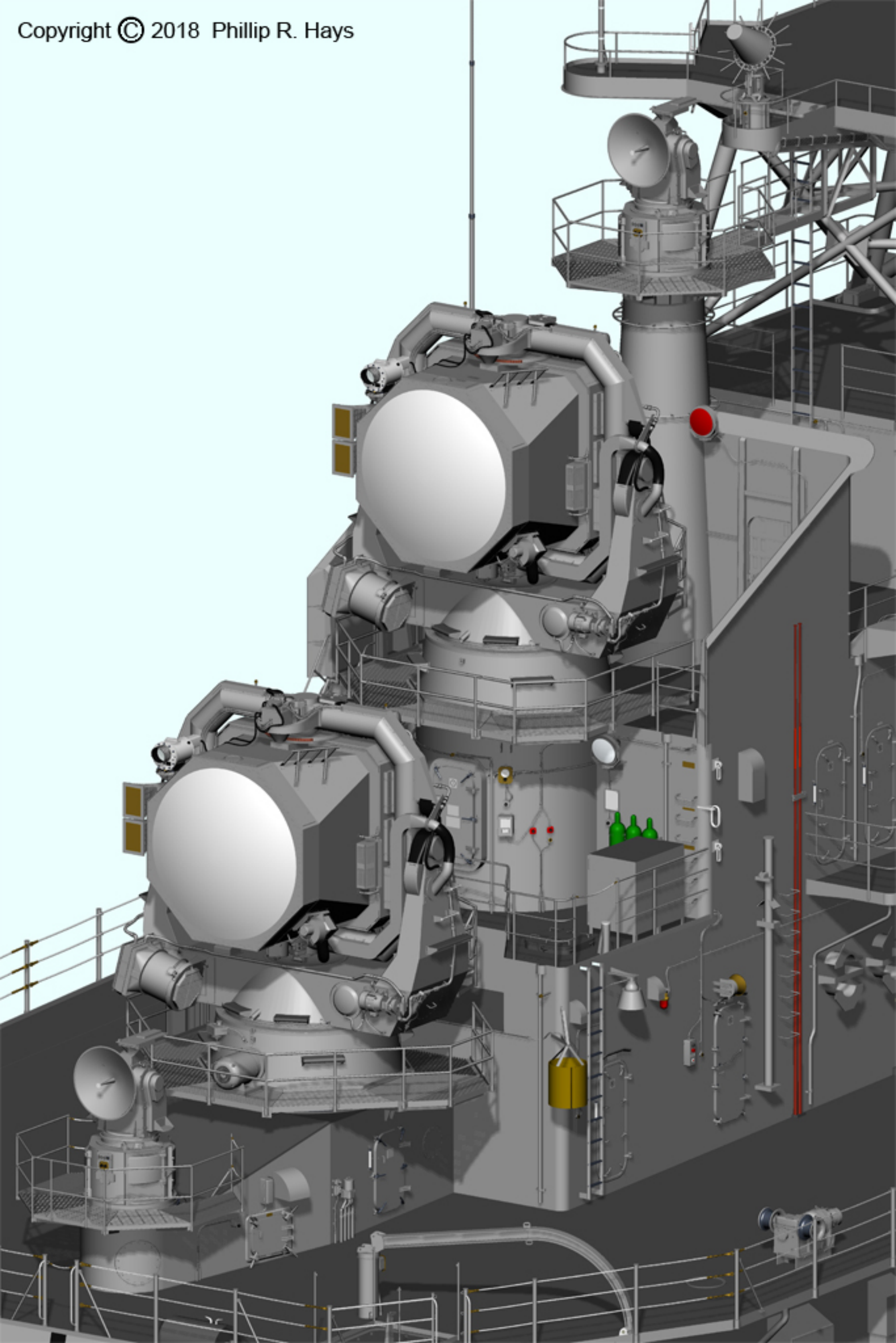

Copyright © 2018 Phillip R. Hays

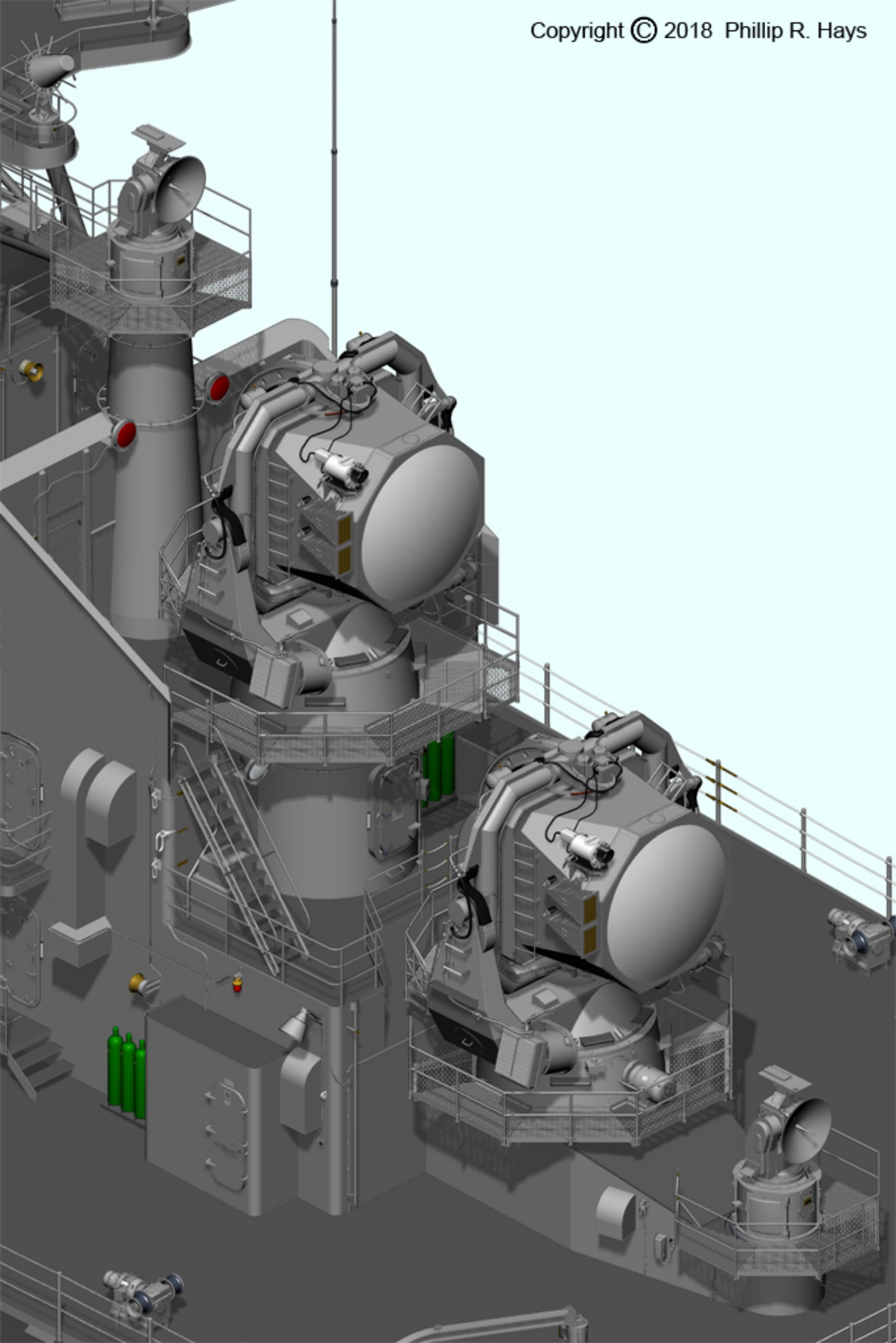

Copyright © 2018 Phillip R. Hays

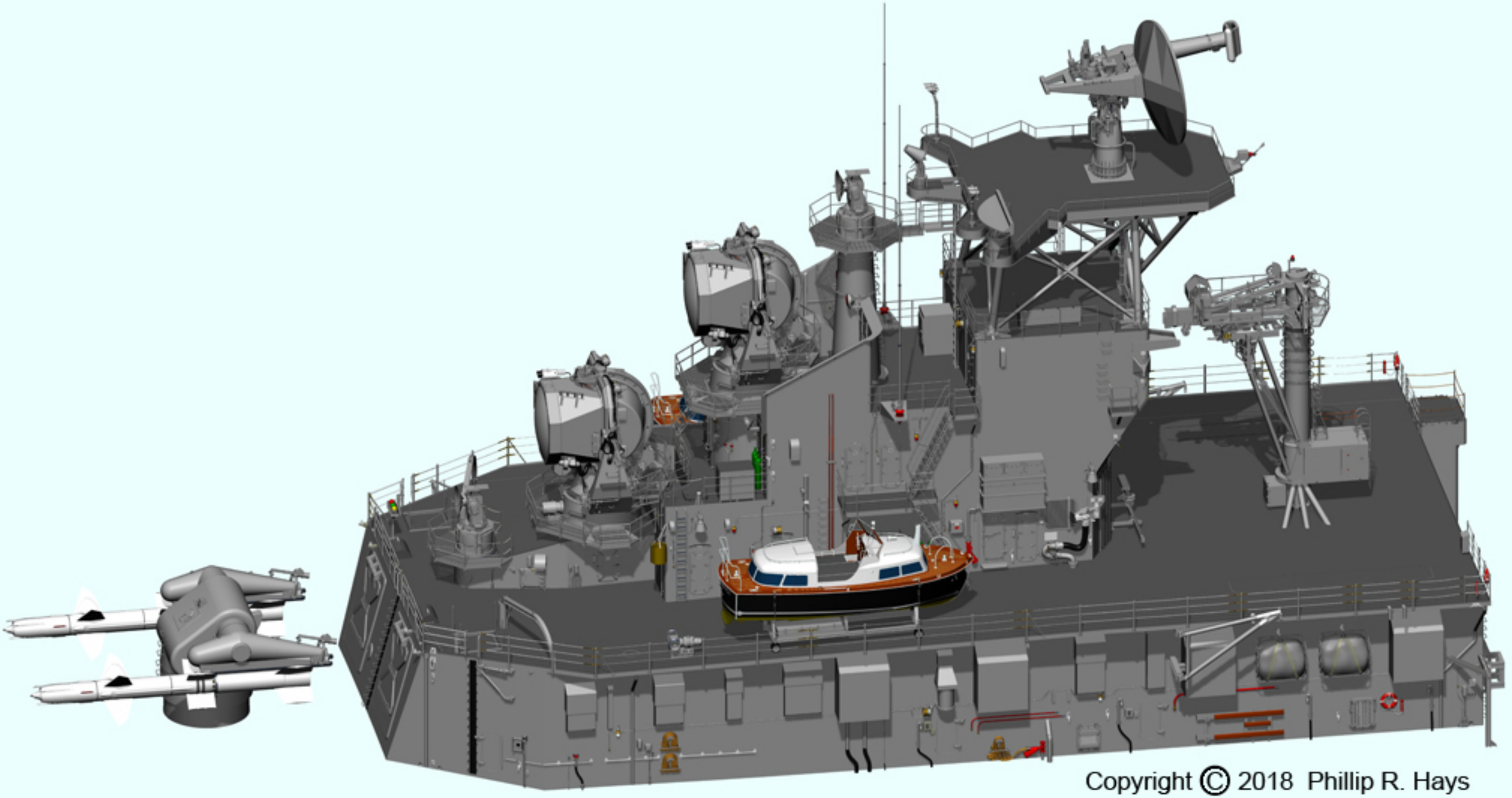

Copyright © 2018 Phillip R. Hays

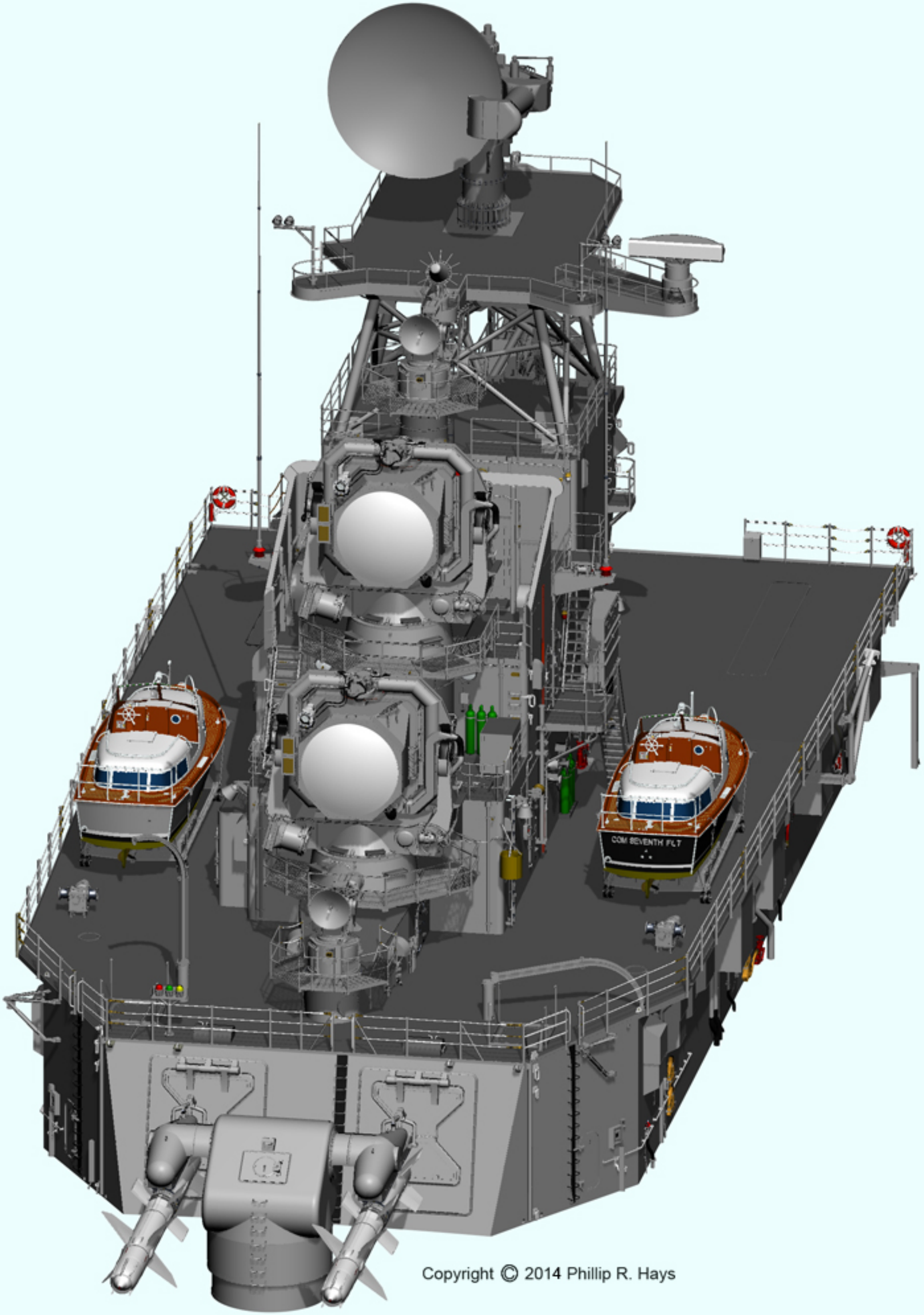

Copyright © 2014 Phillip R. Hays

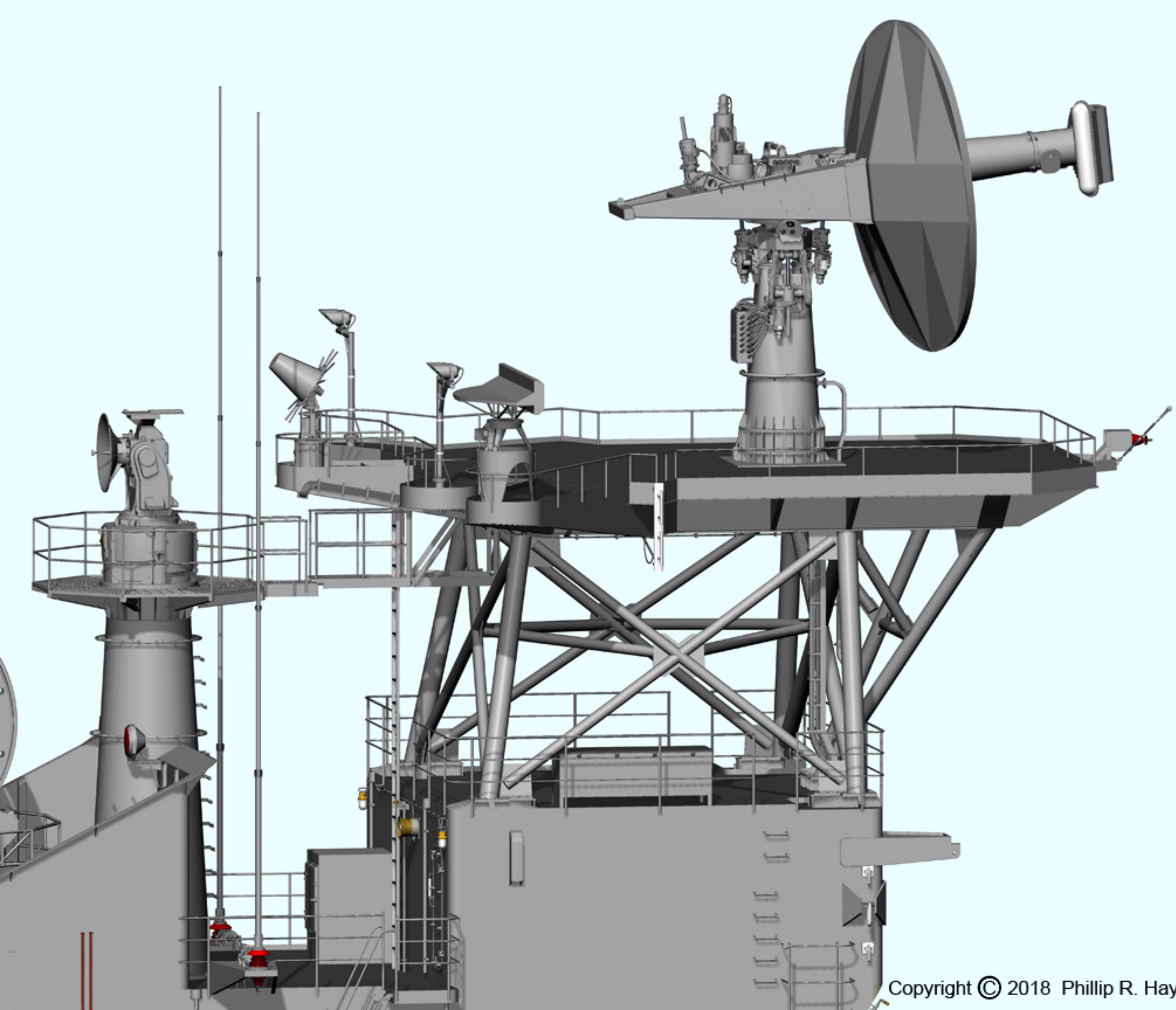
Copyright © 2018 Phillip R. Hays

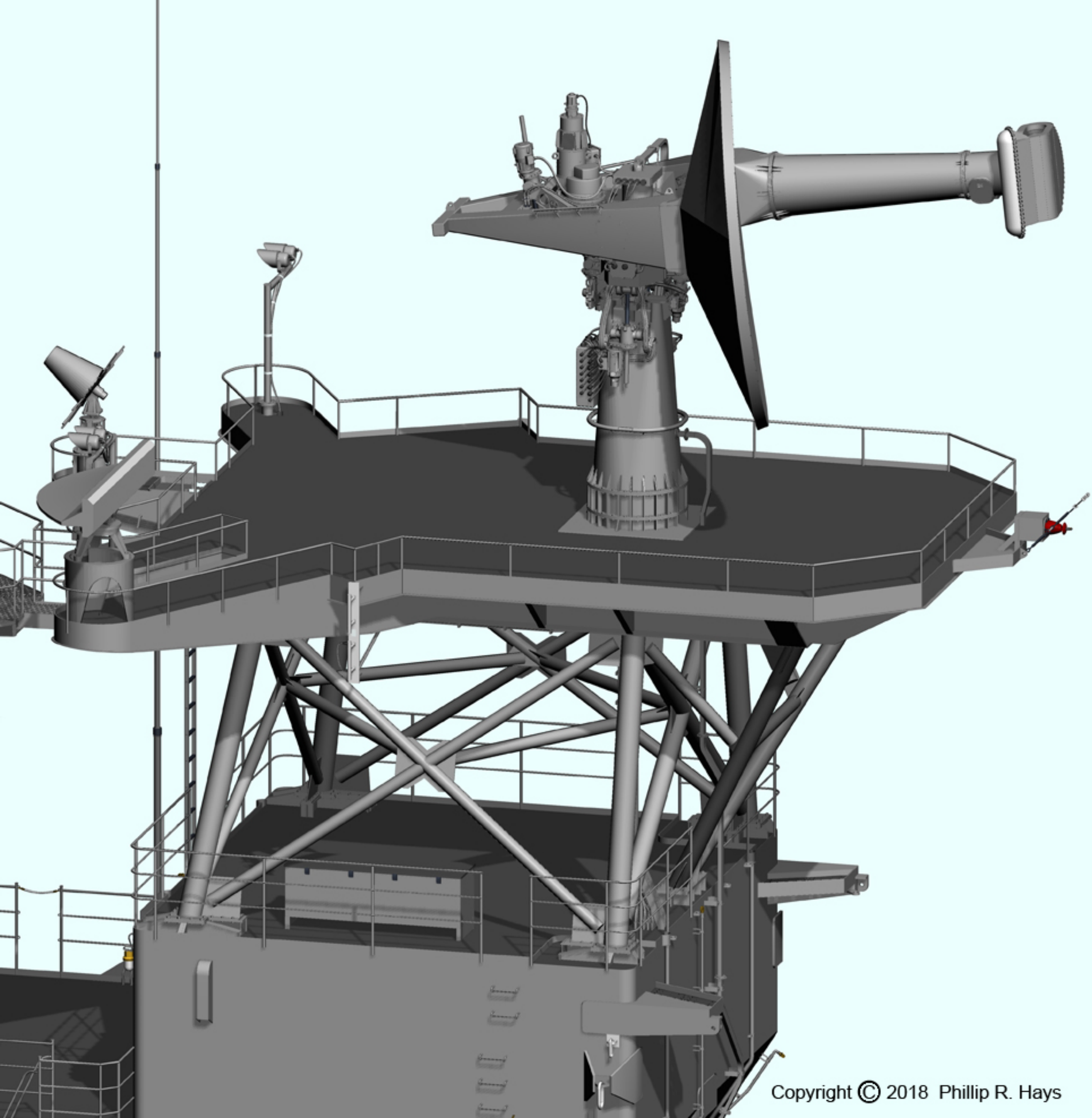

Copyright © 2018 Phillip R. Hays

Copyright © 2018 Phillip R. Hays

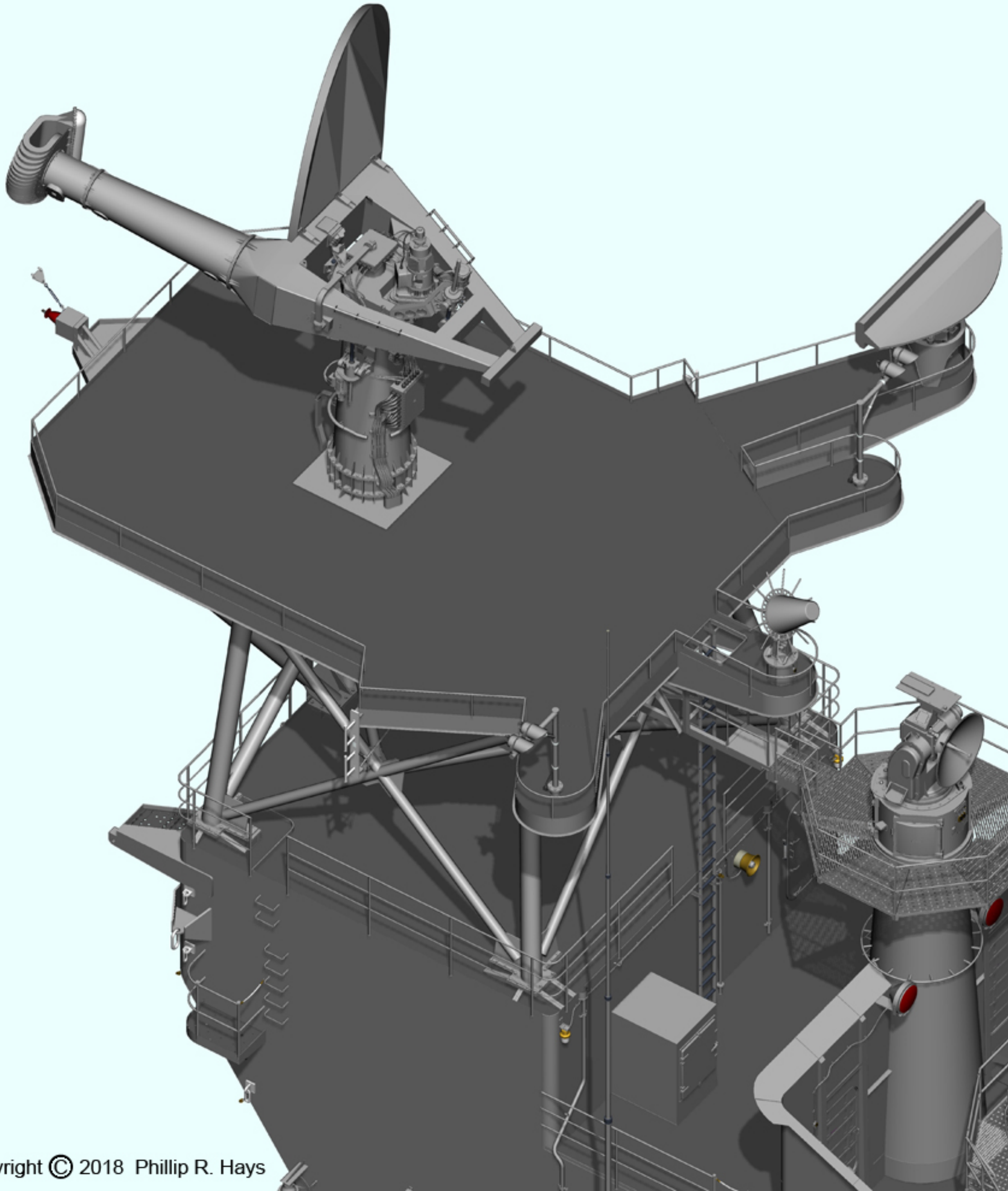

Copyright © 2018 Phillip R. Hays

Copyright © 2018 Phillip R. Hays

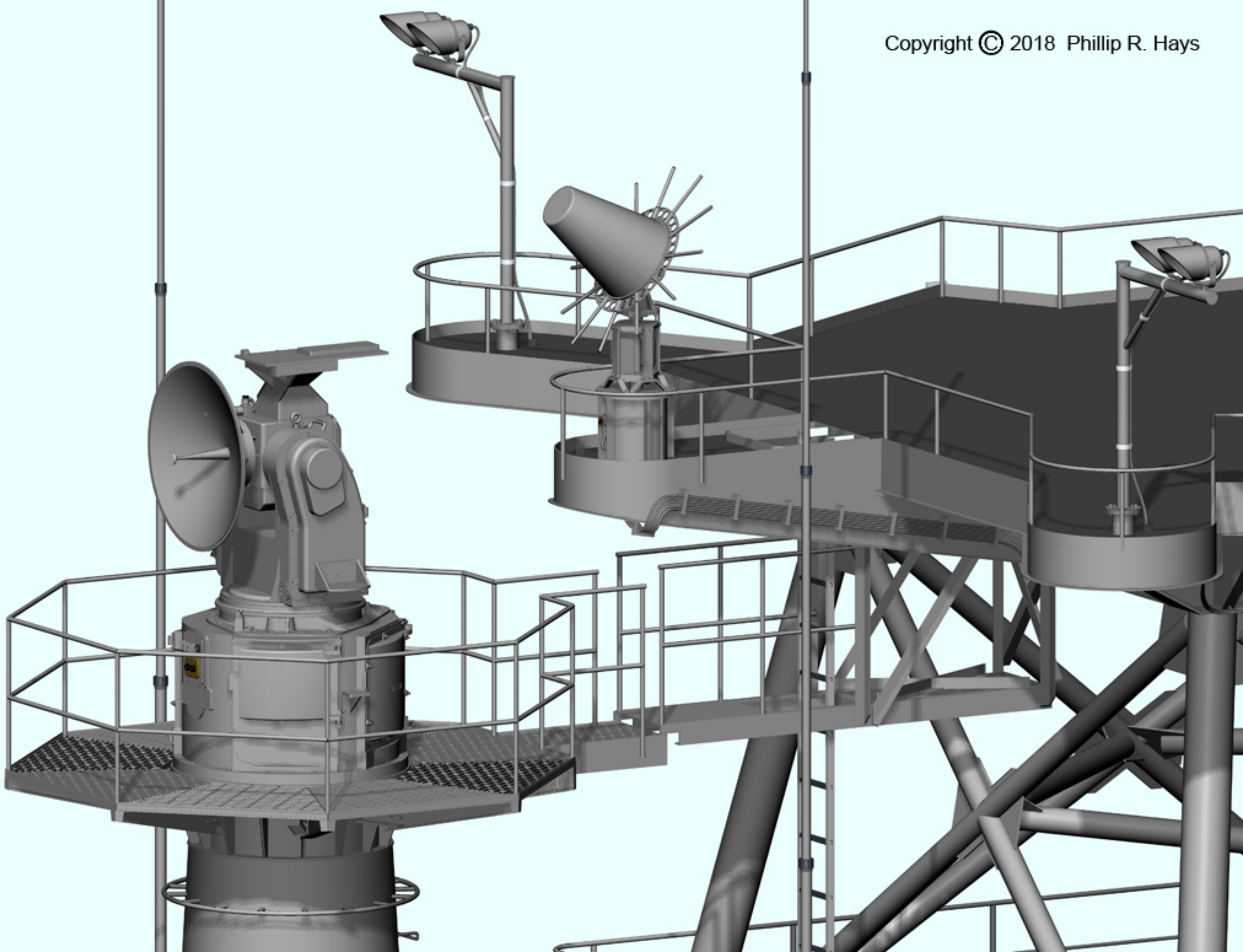

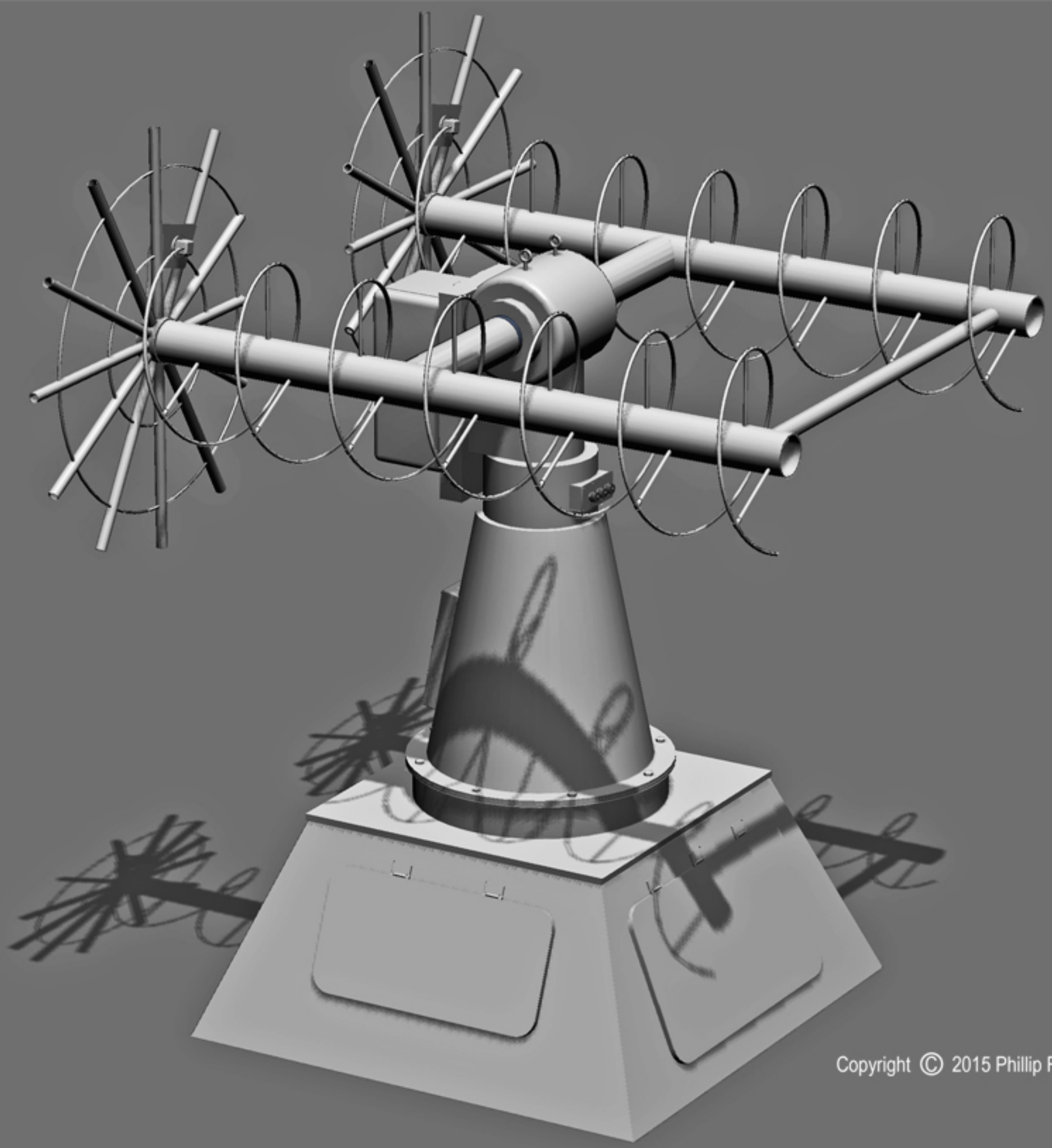

Copyright © 2015 Phillip R. Hays

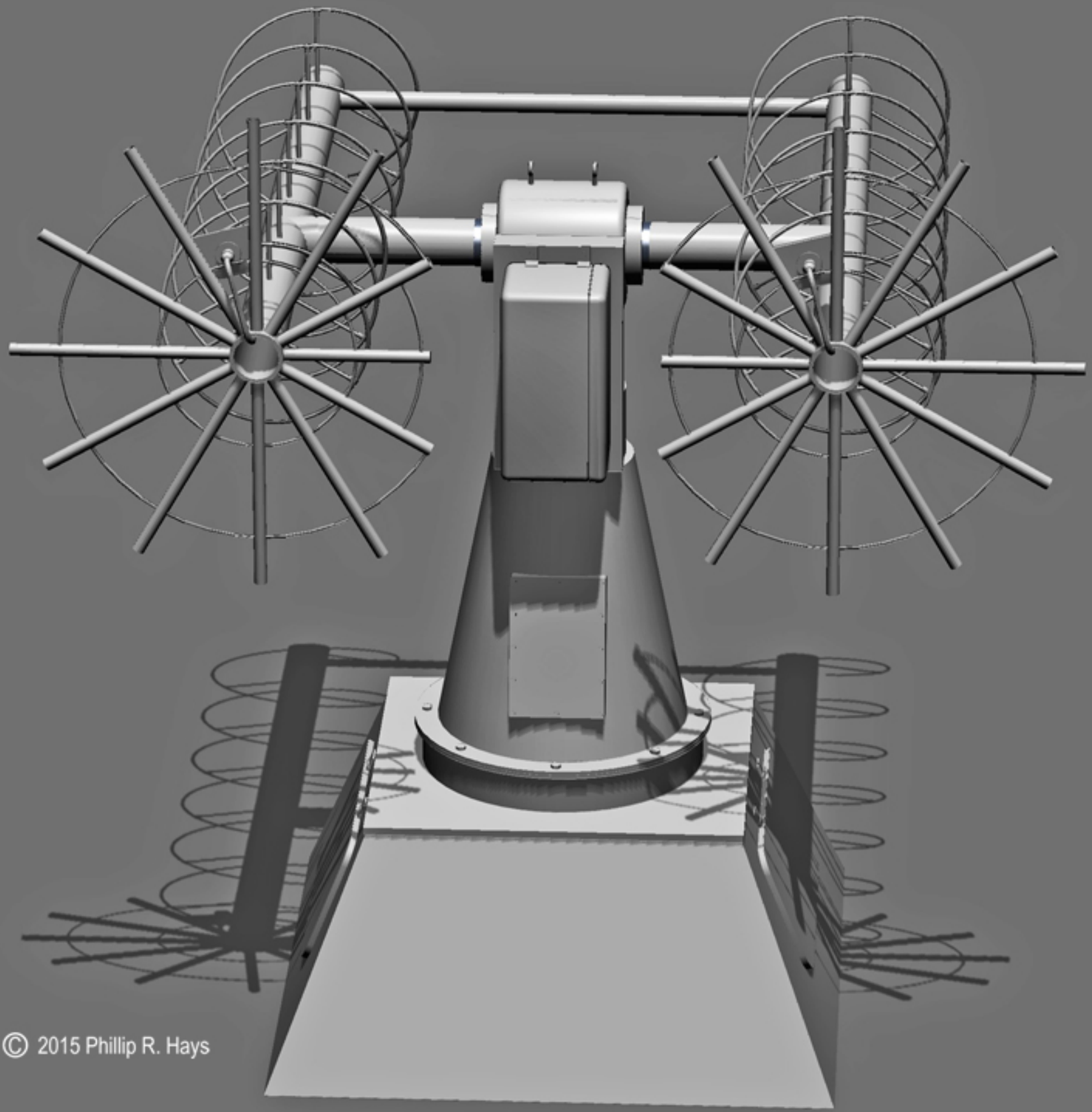

Copyright © 2015 Phillip R. Hays

Copyright © 2018 Phillip R. Hays

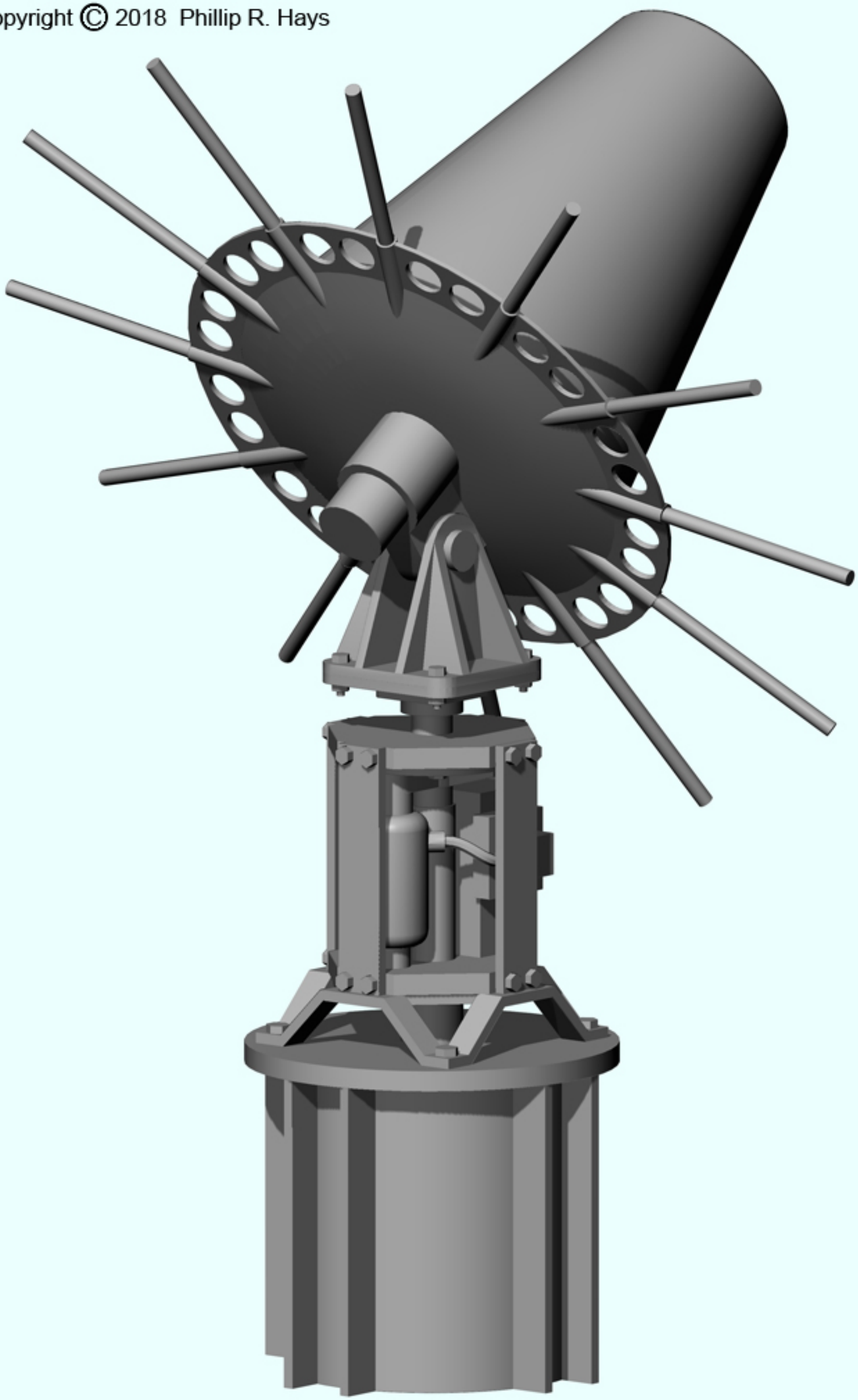

Copyright © 2018 Phillip R. Hays

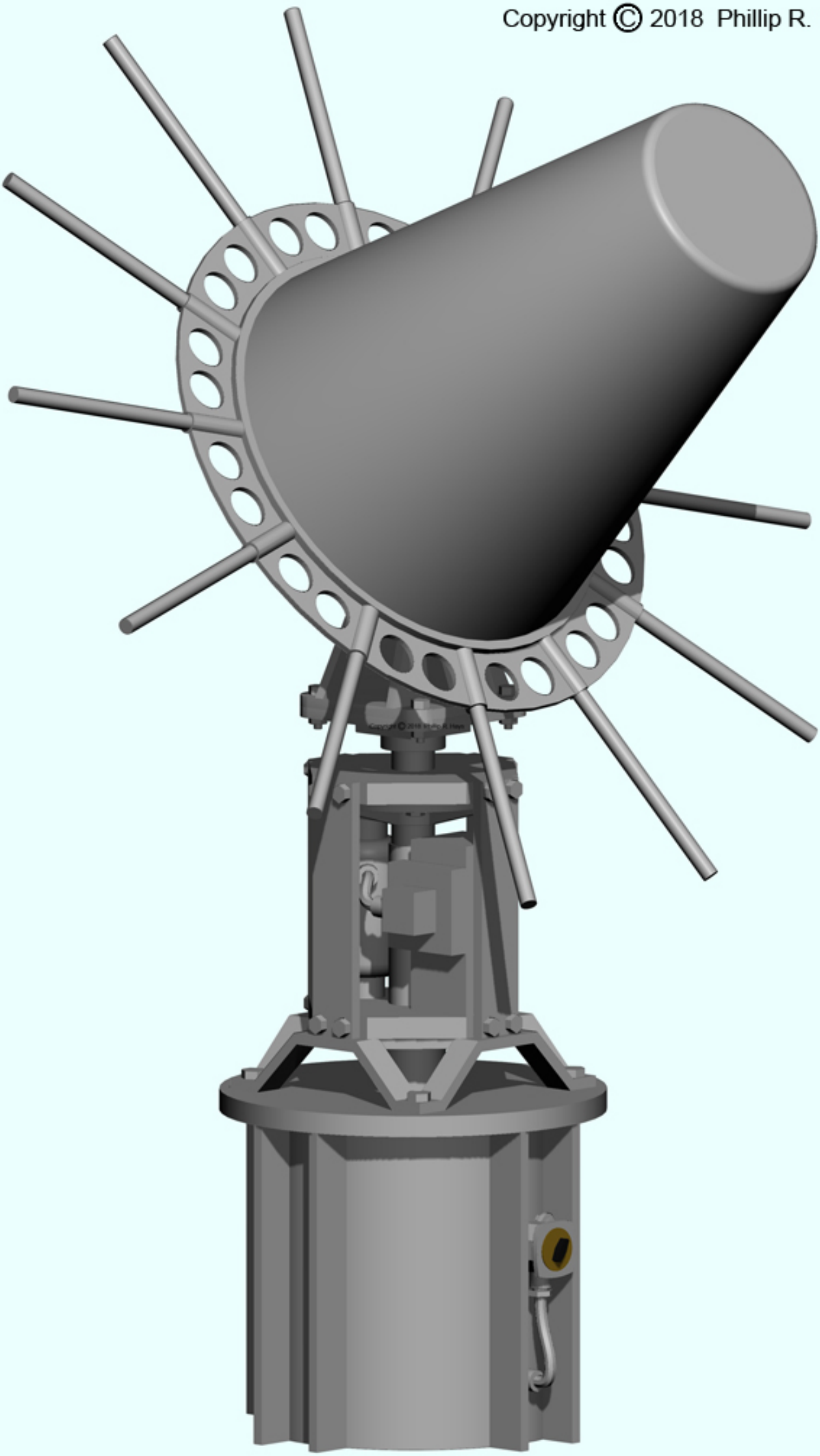

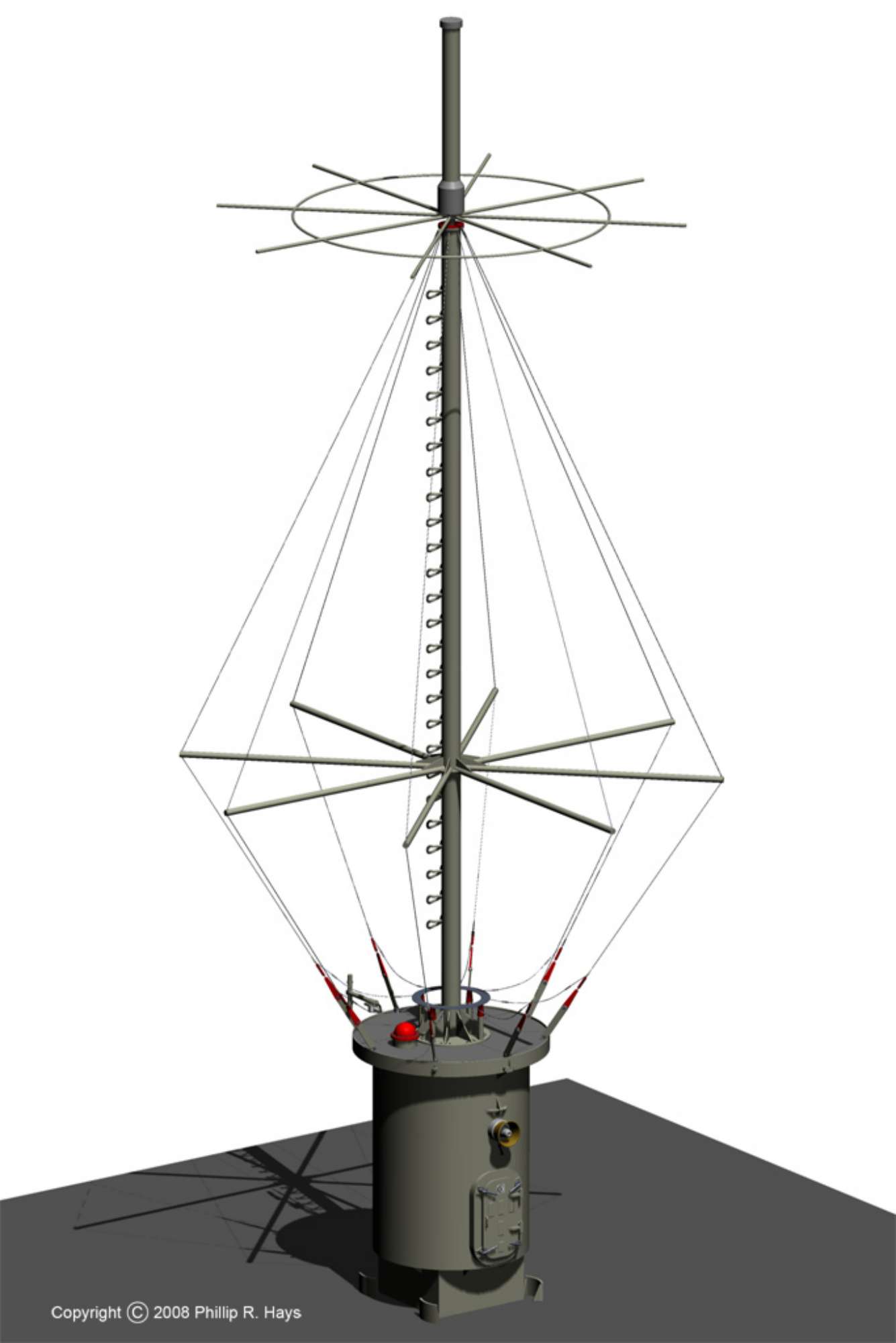

Copyright © 2008 Phillip R. Hays

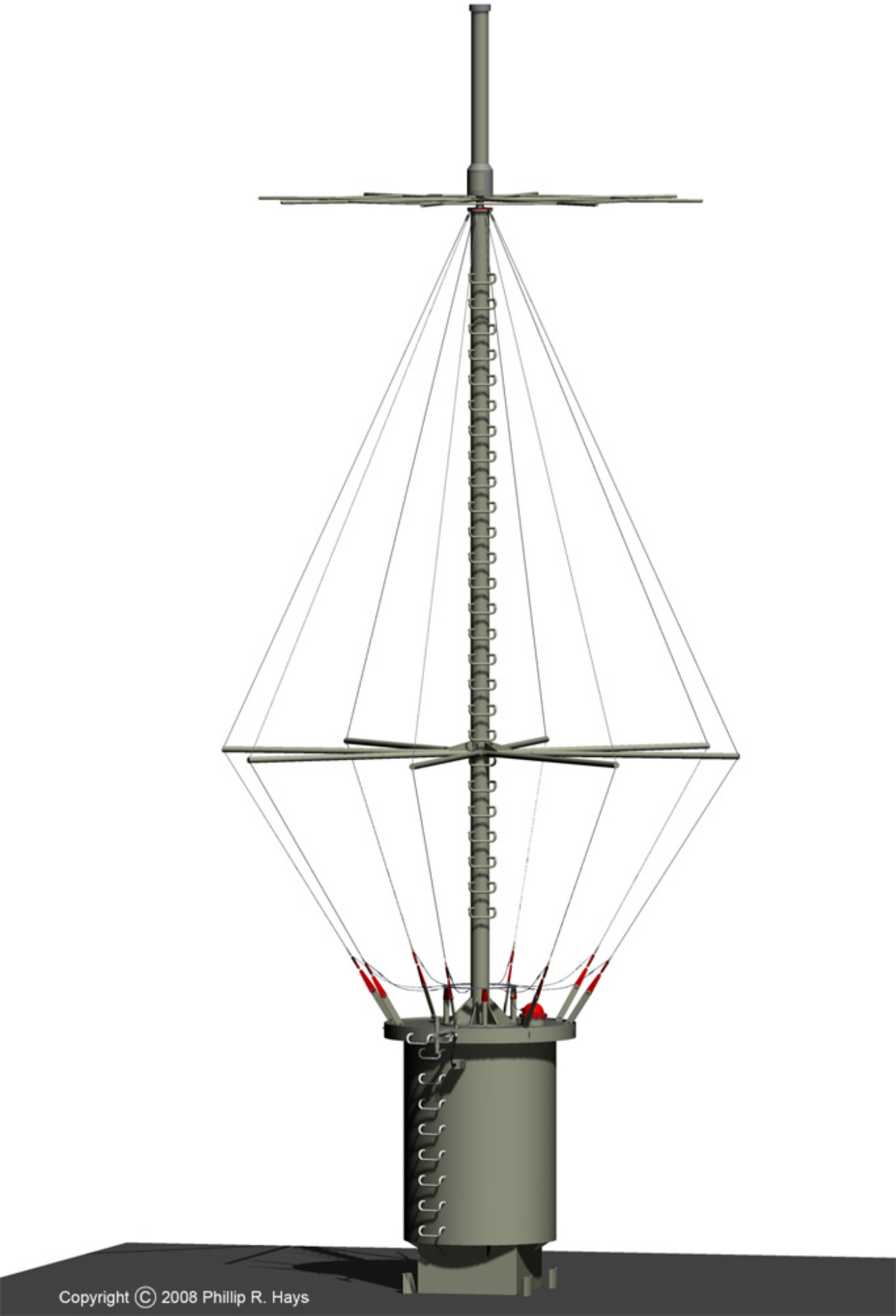

Copyright © 2008 Phillip R. Hays

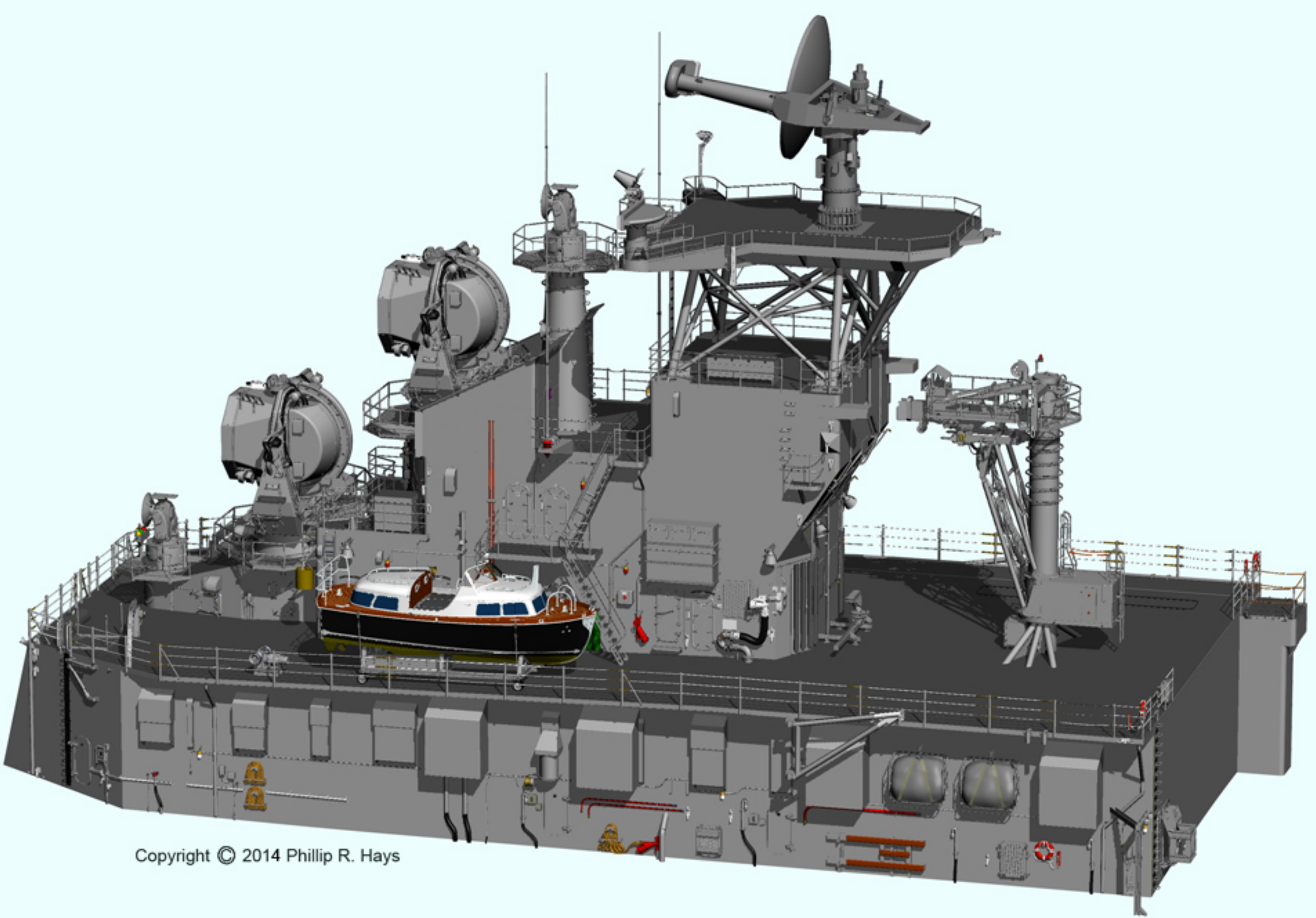

Copyright © 2014 Phillip R. Hays

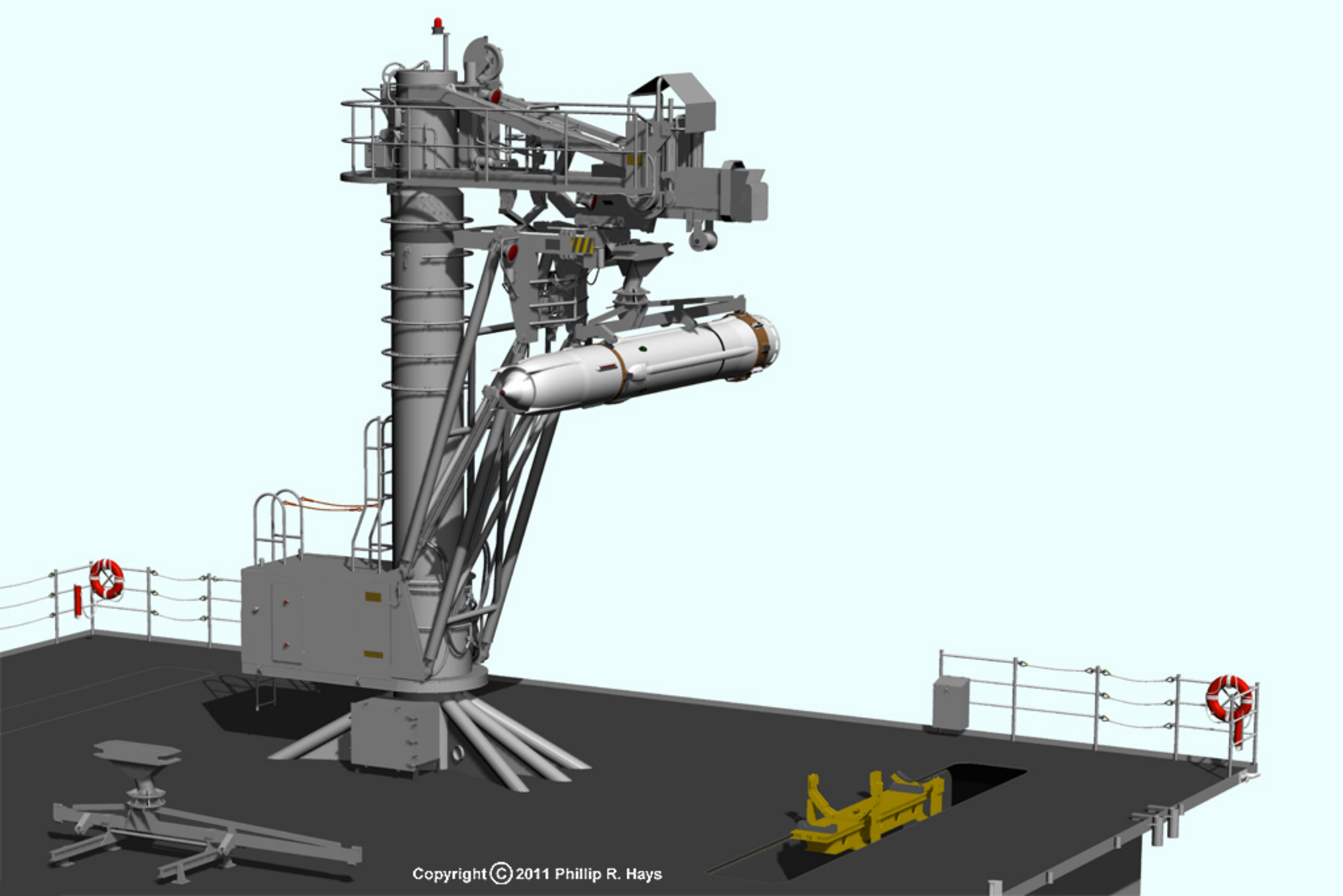
Copyright © 2011 Phillip R. Hays

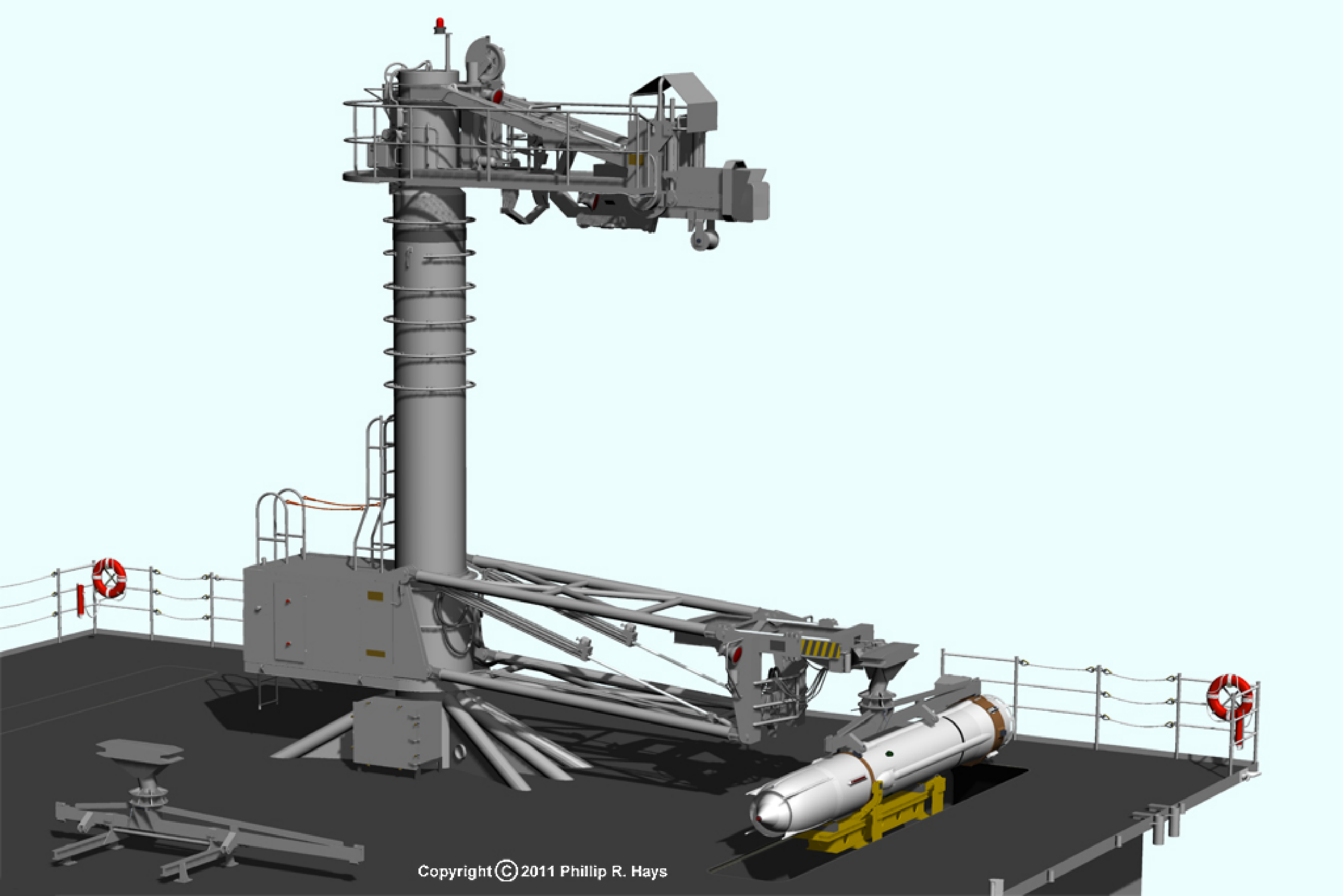
Copyright © 2011 Phillip R. Hays

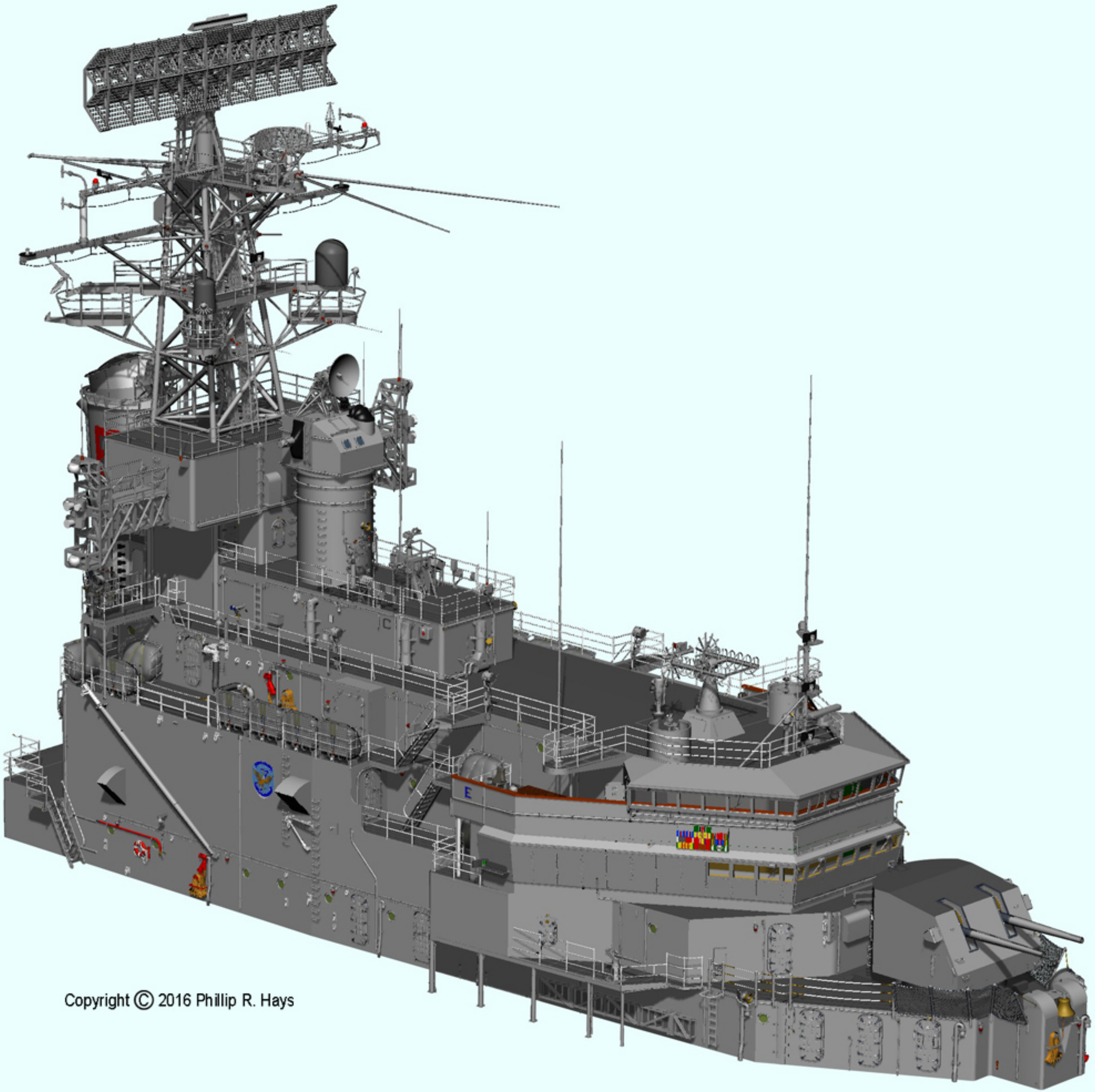

Copyright © 2016 Phillip R. Hays

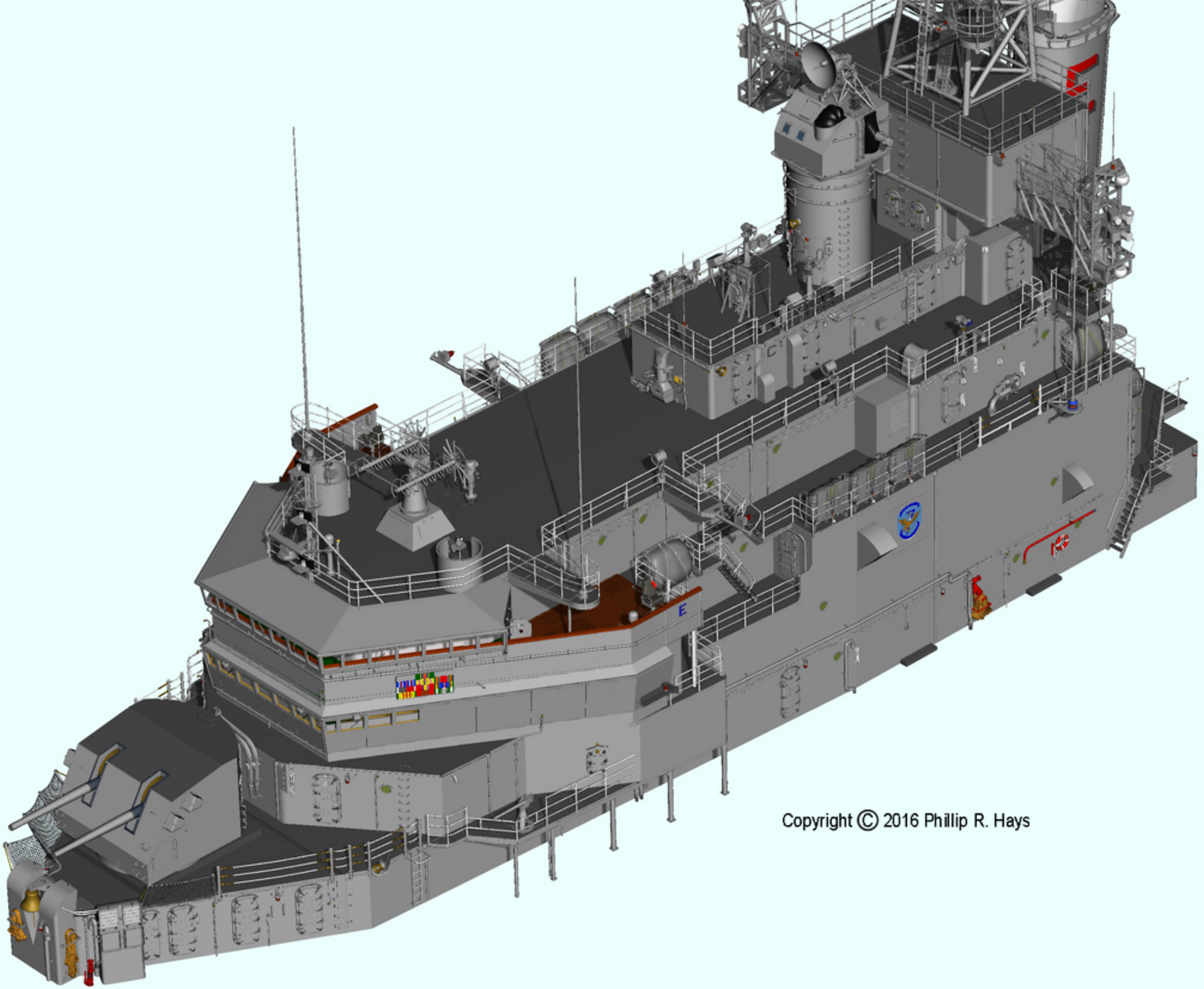

Copyright © 2016 Phillip R. Hays

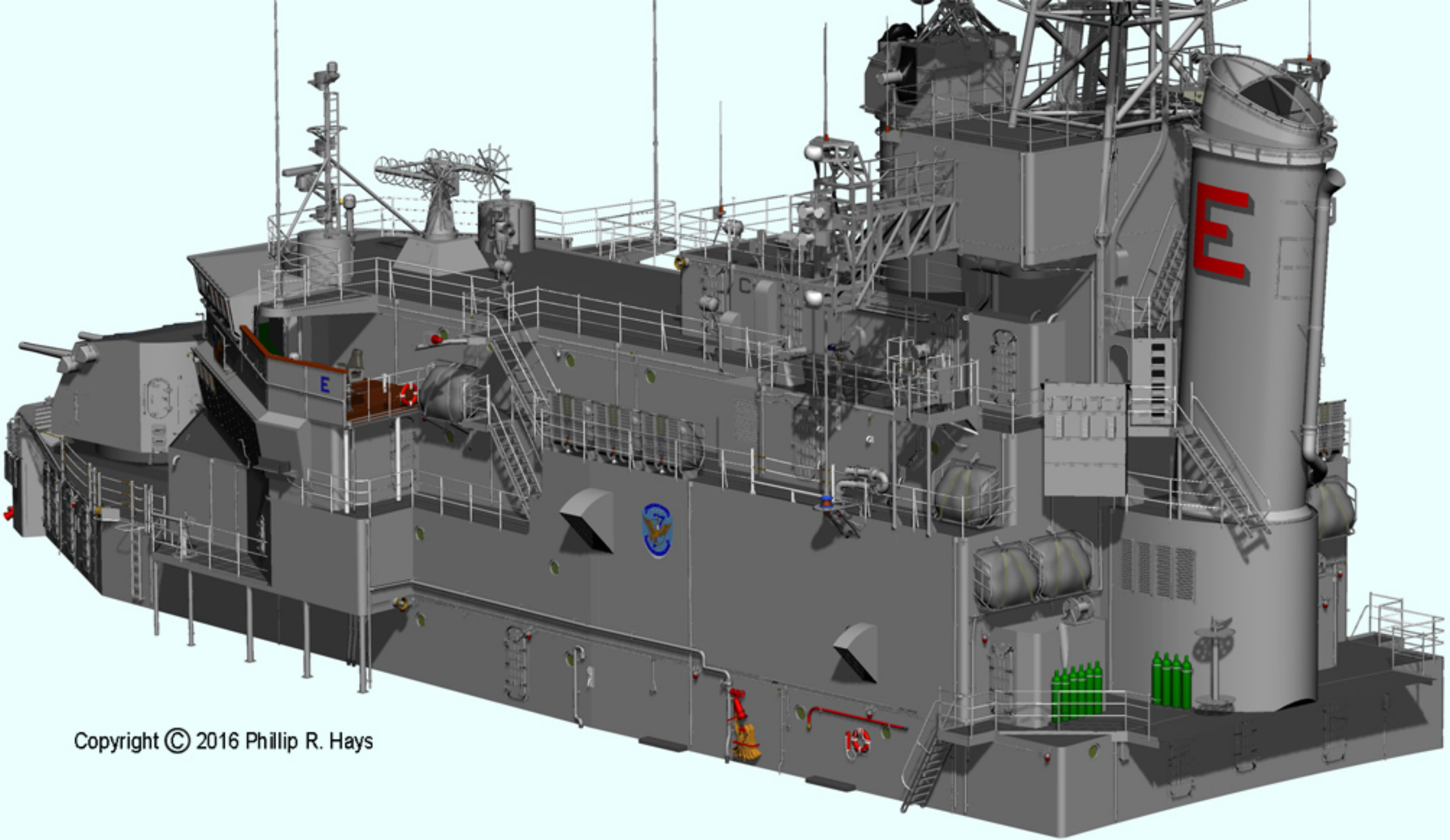

Copyright © 2016 Phillip R. Hays

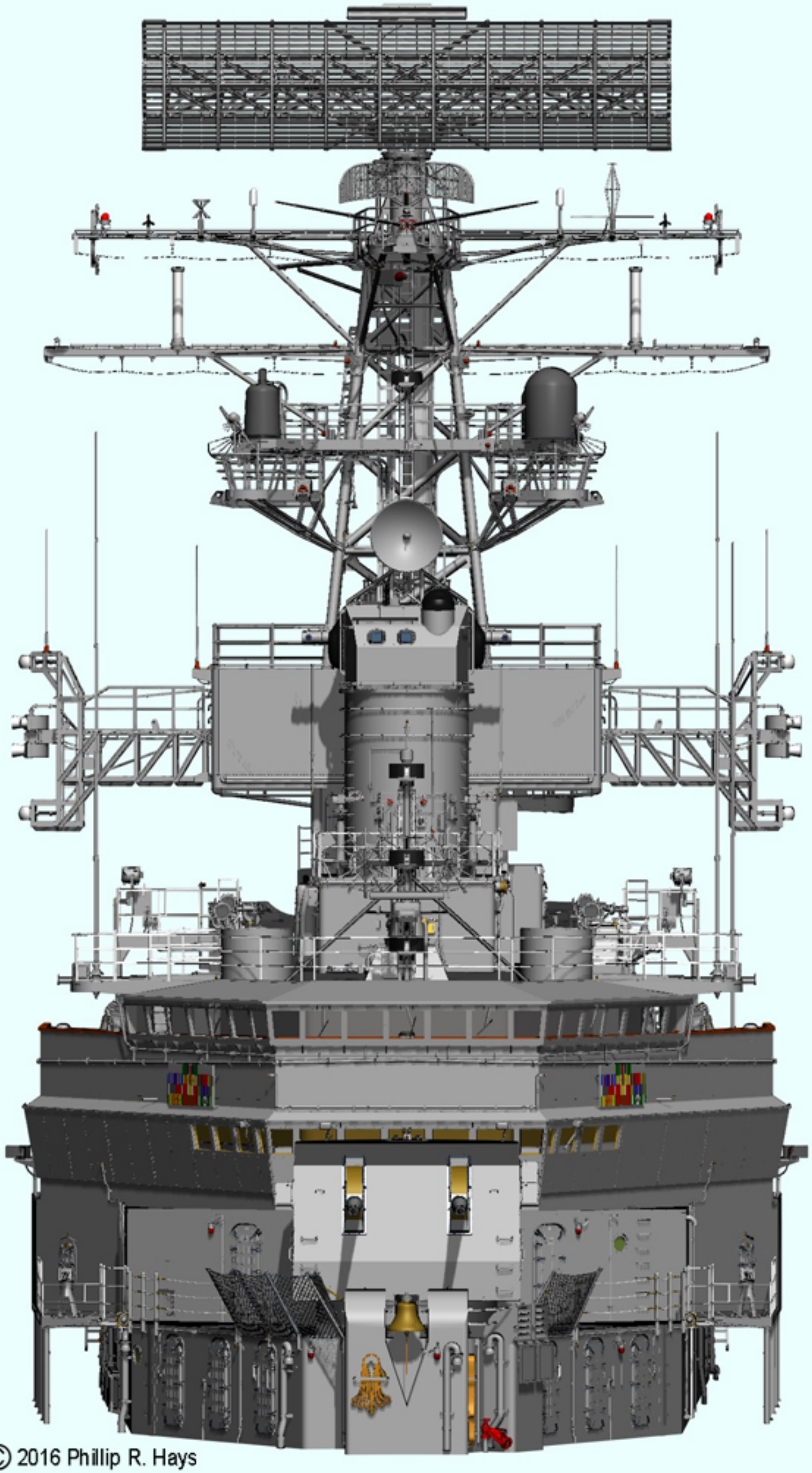

Copyright © 2016 Phillip R. Hays

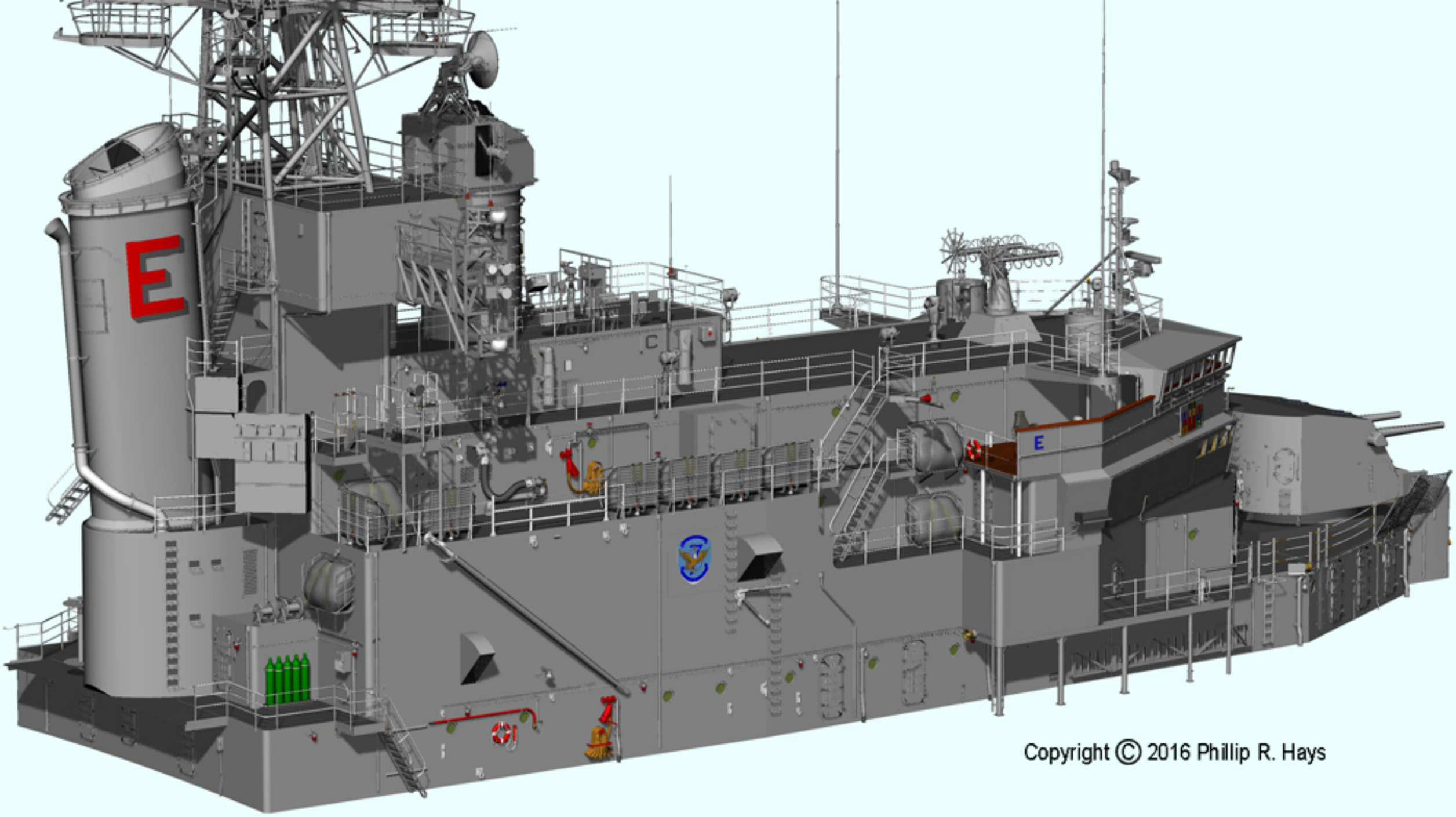

Copyright © 2016 Phillip R. Hays

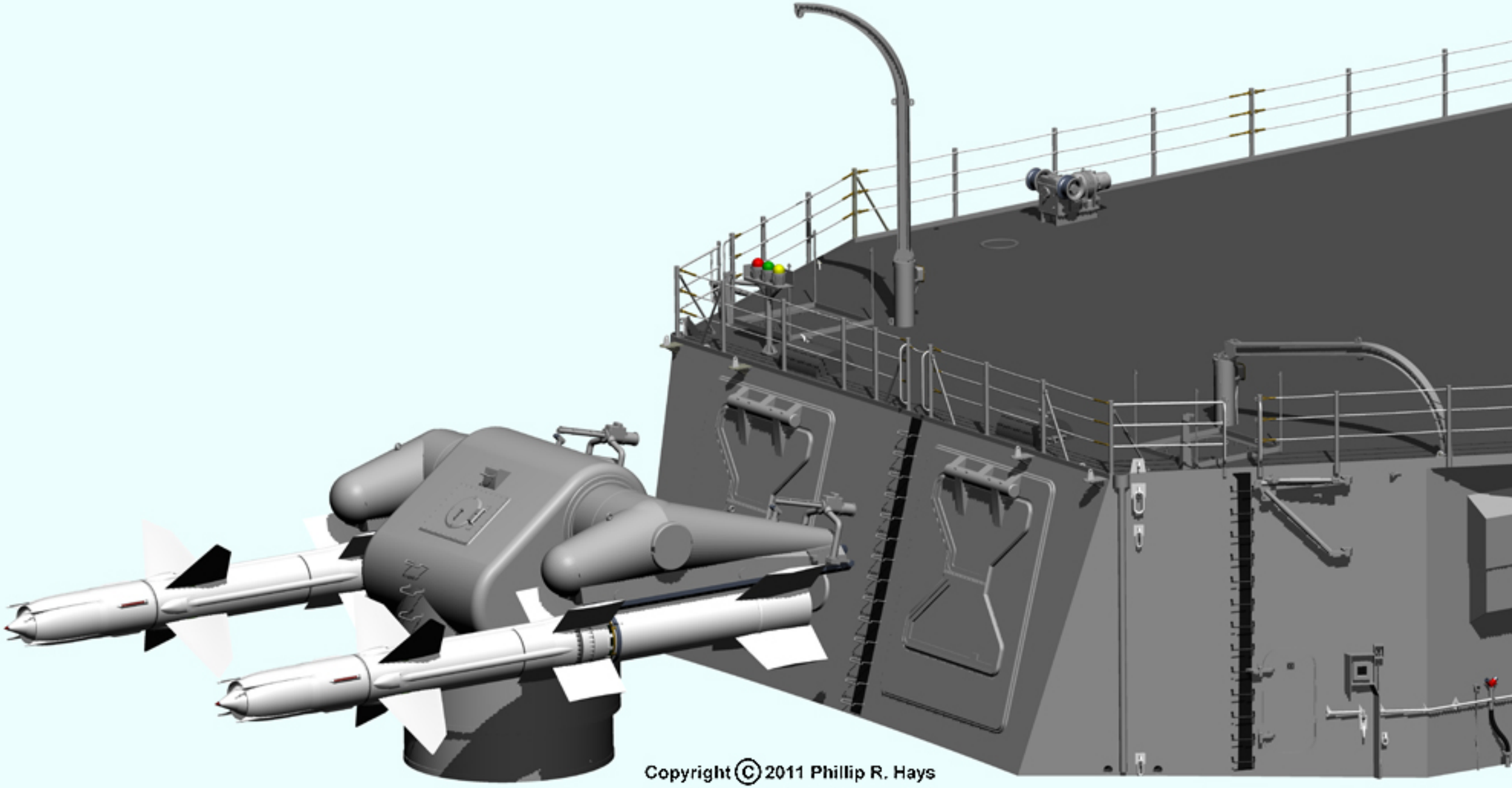
Copyright © 2011 Phillip R. Hays

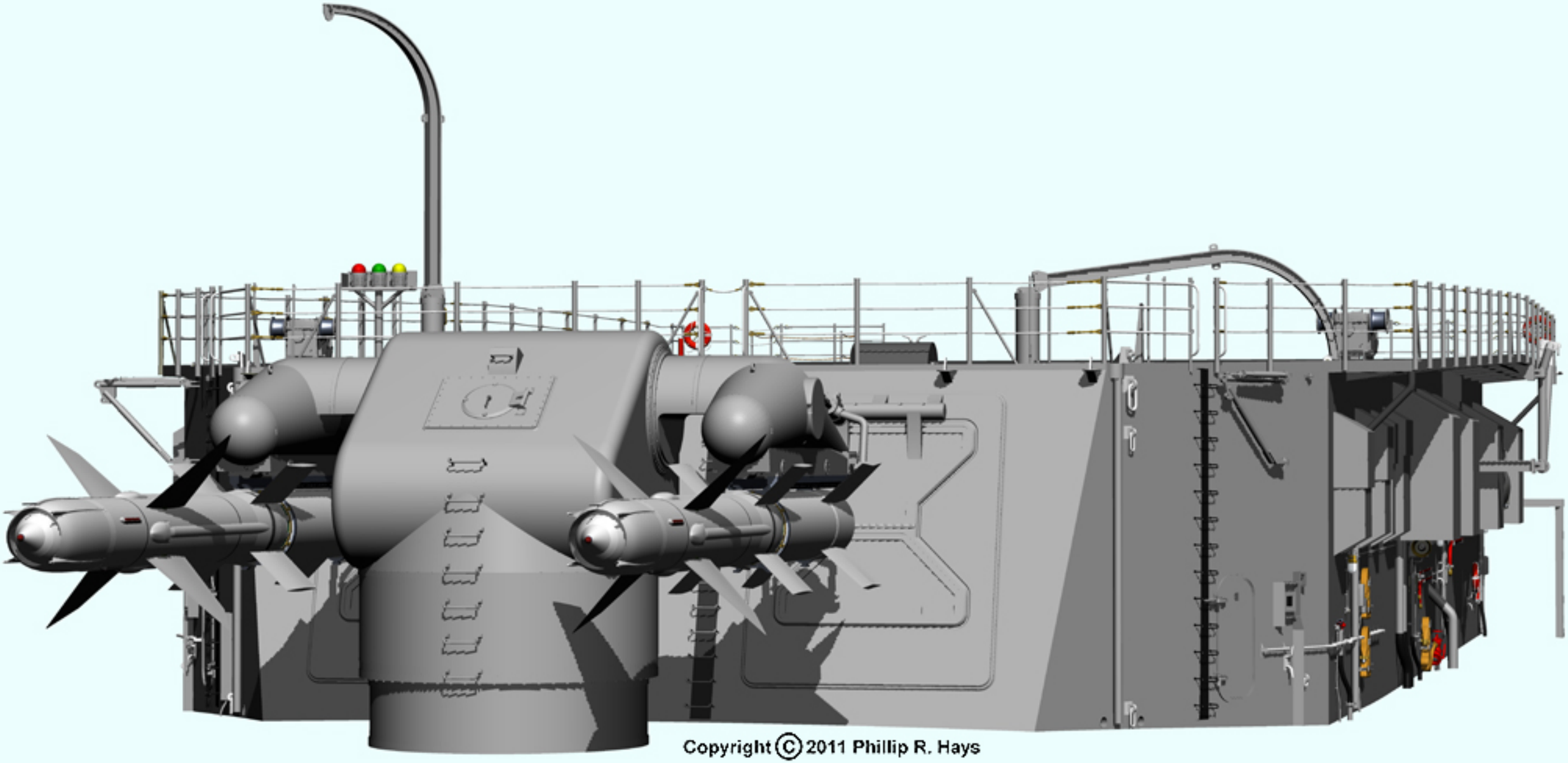
Copyright © 2011 Phillip R. Hays

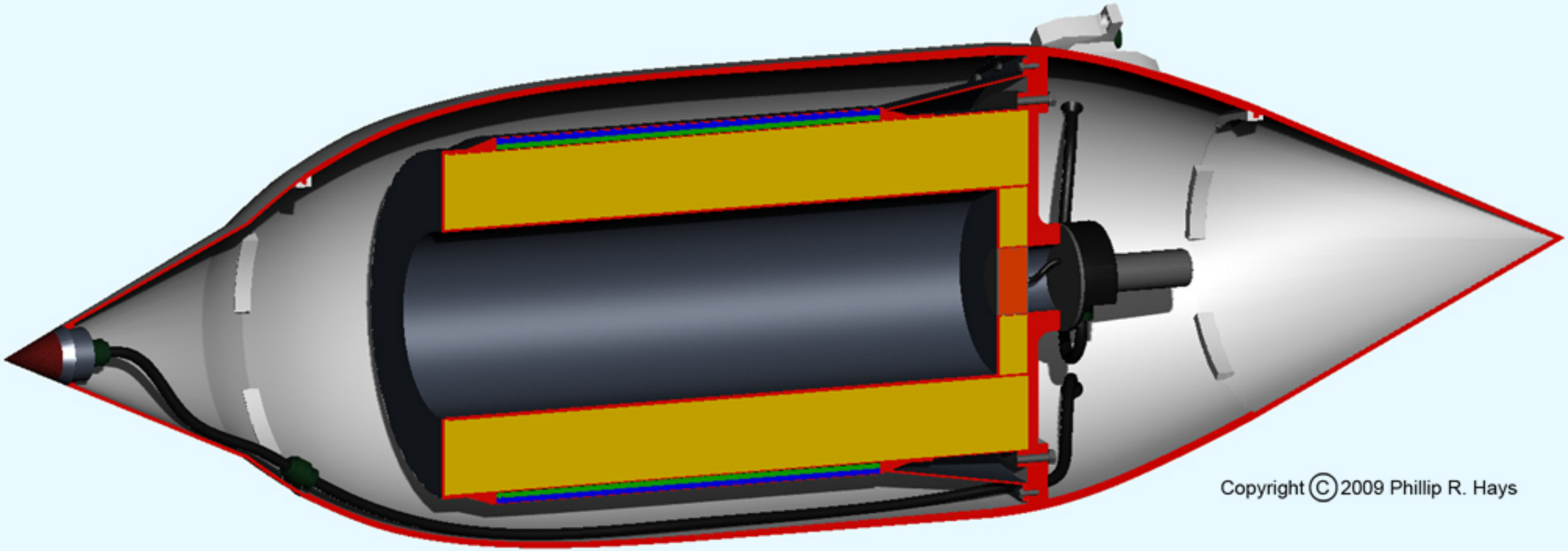
Copyright © 2009 Phillip R. Hays

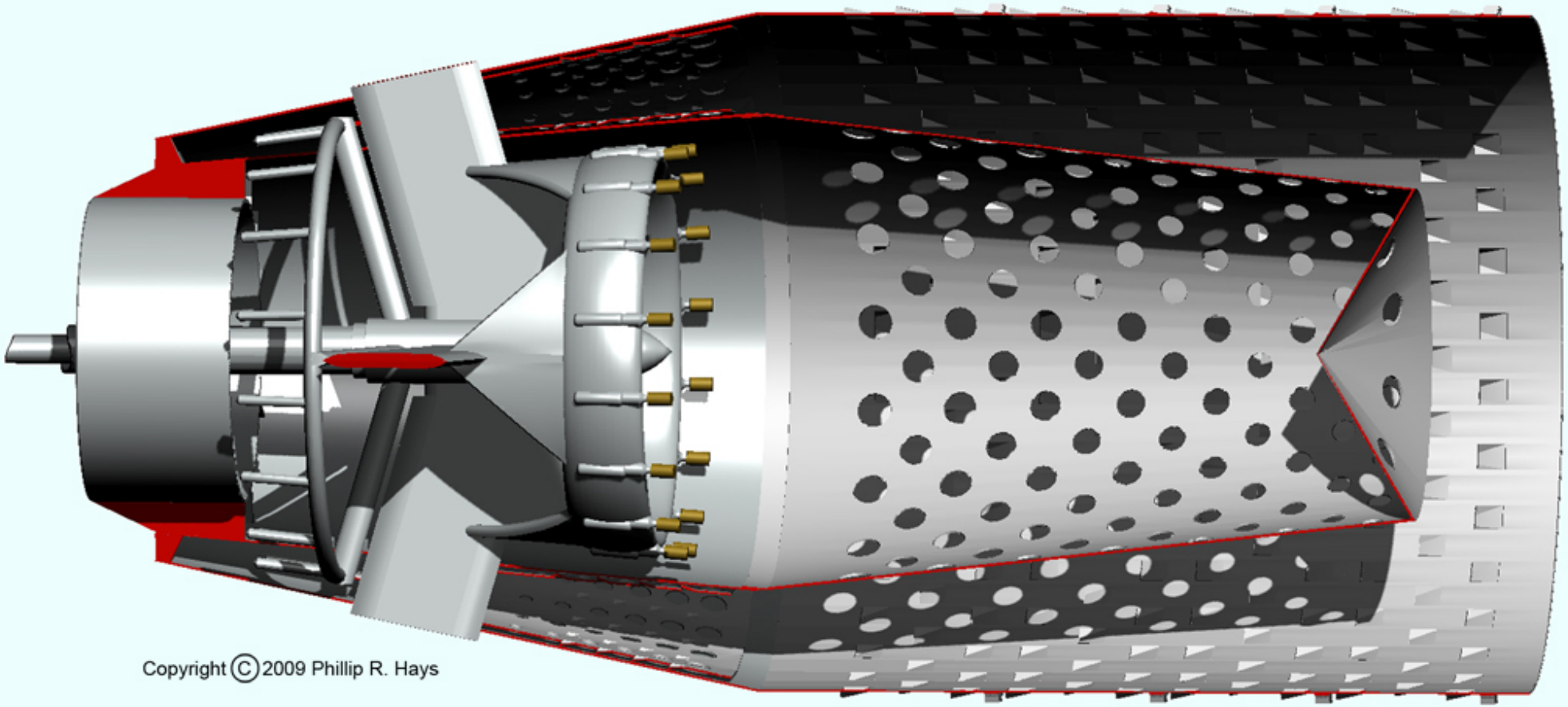
Copyright © 2009 Phillip R. Hays

Copyright © 2018 Phillip R. Hays

Copyright © 2018 Phillip R. Hays

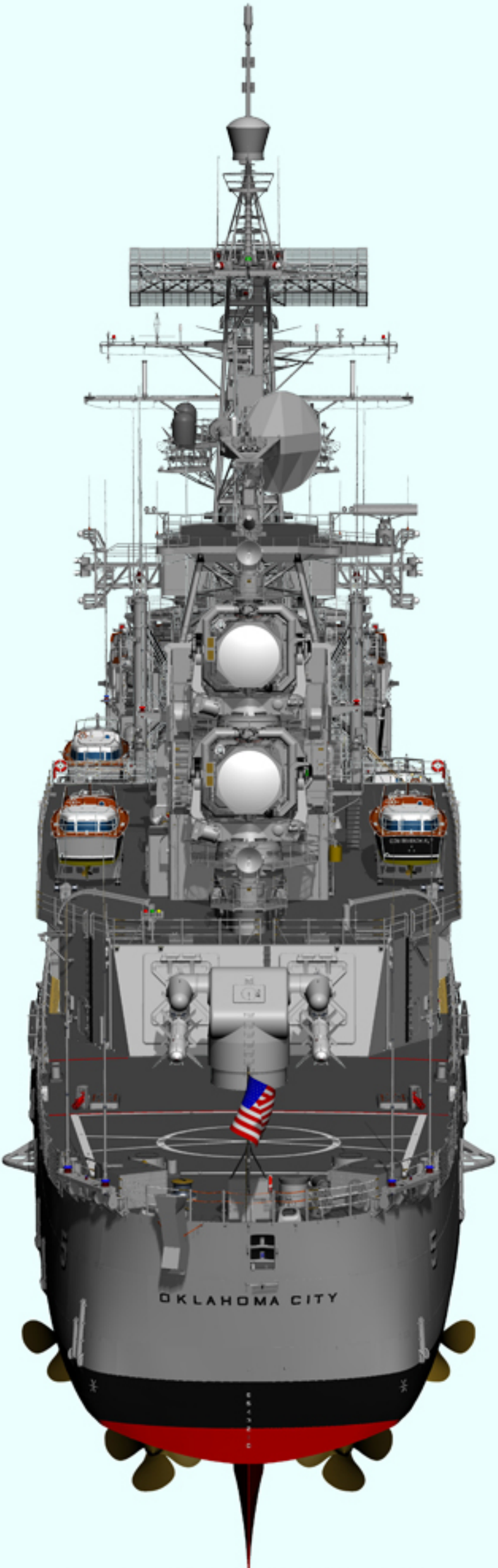

Copyright © 2018 Phillip R. Hays

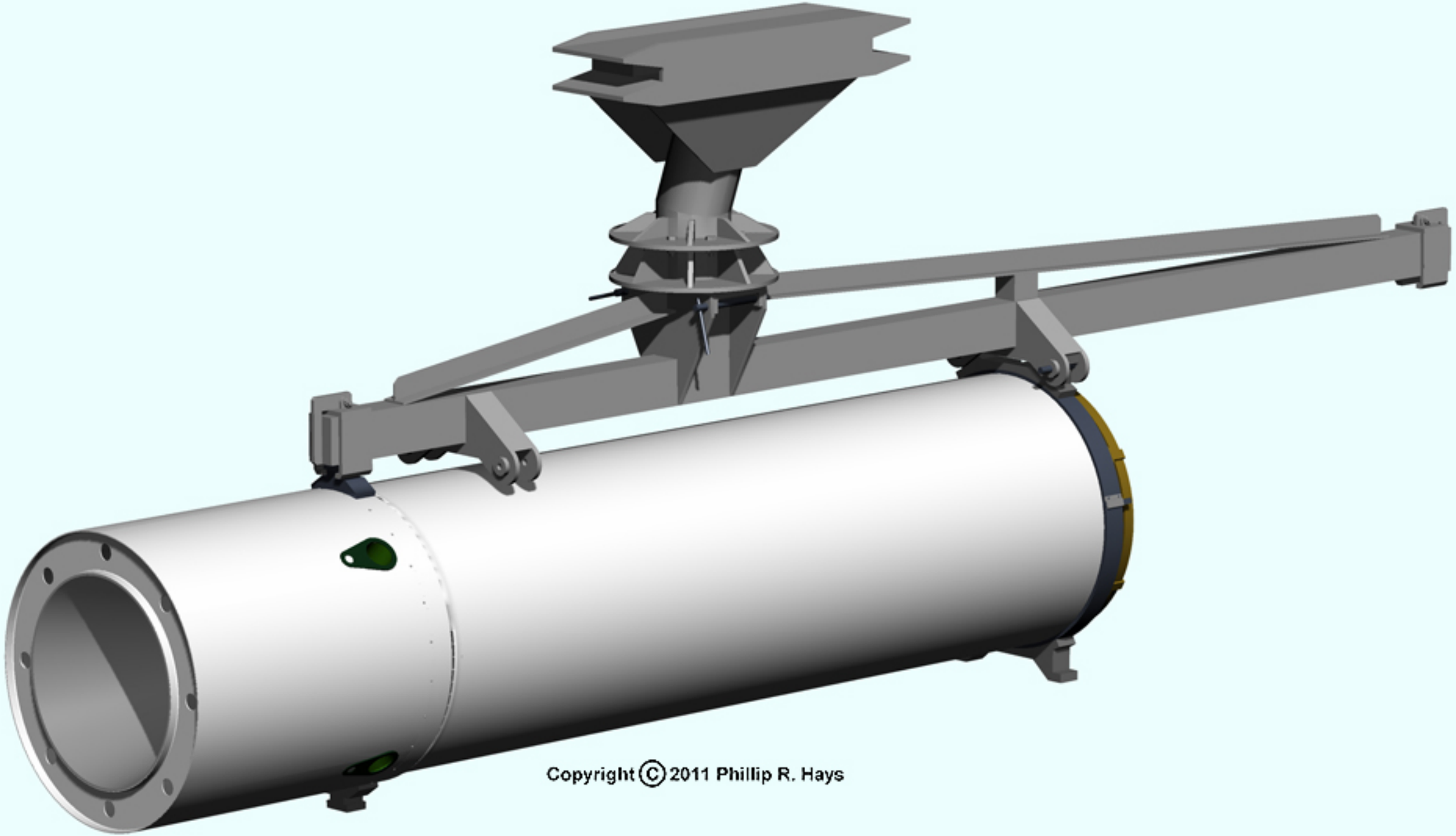
Copyright © 2011 Phillip R. Hays

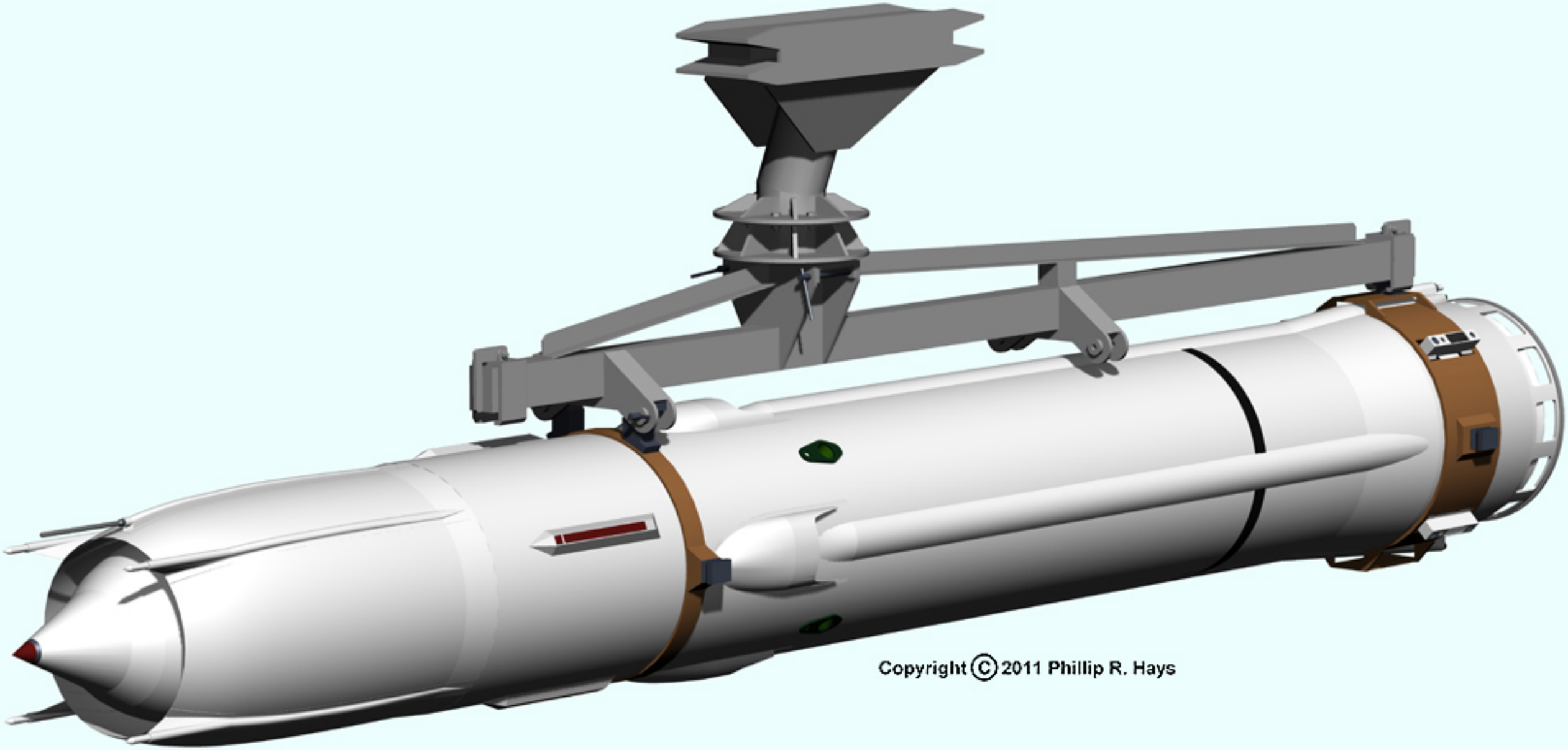
Copyright © 2011 Phillip R. Hays

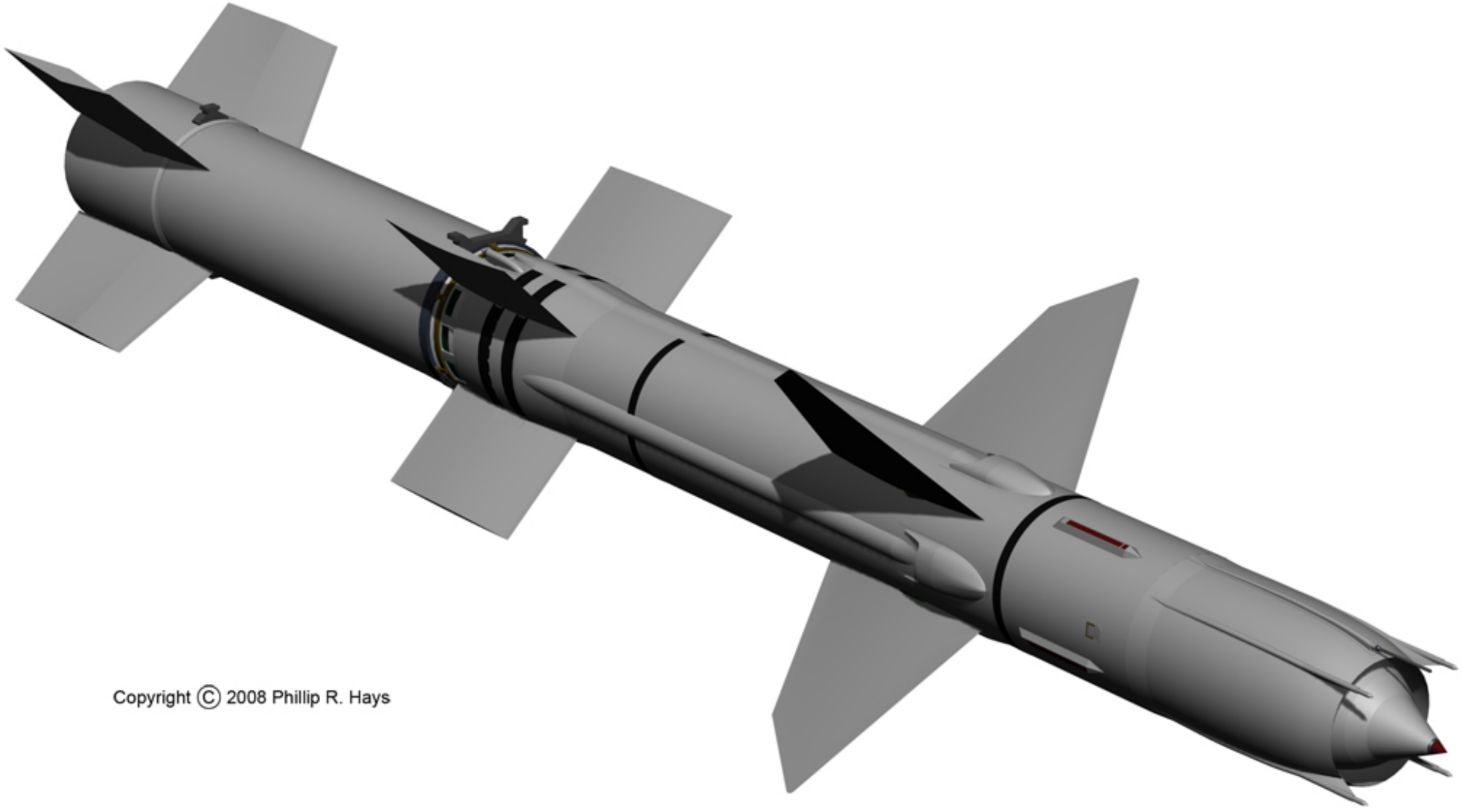

Copyright © 2008 Phillip R. Hays

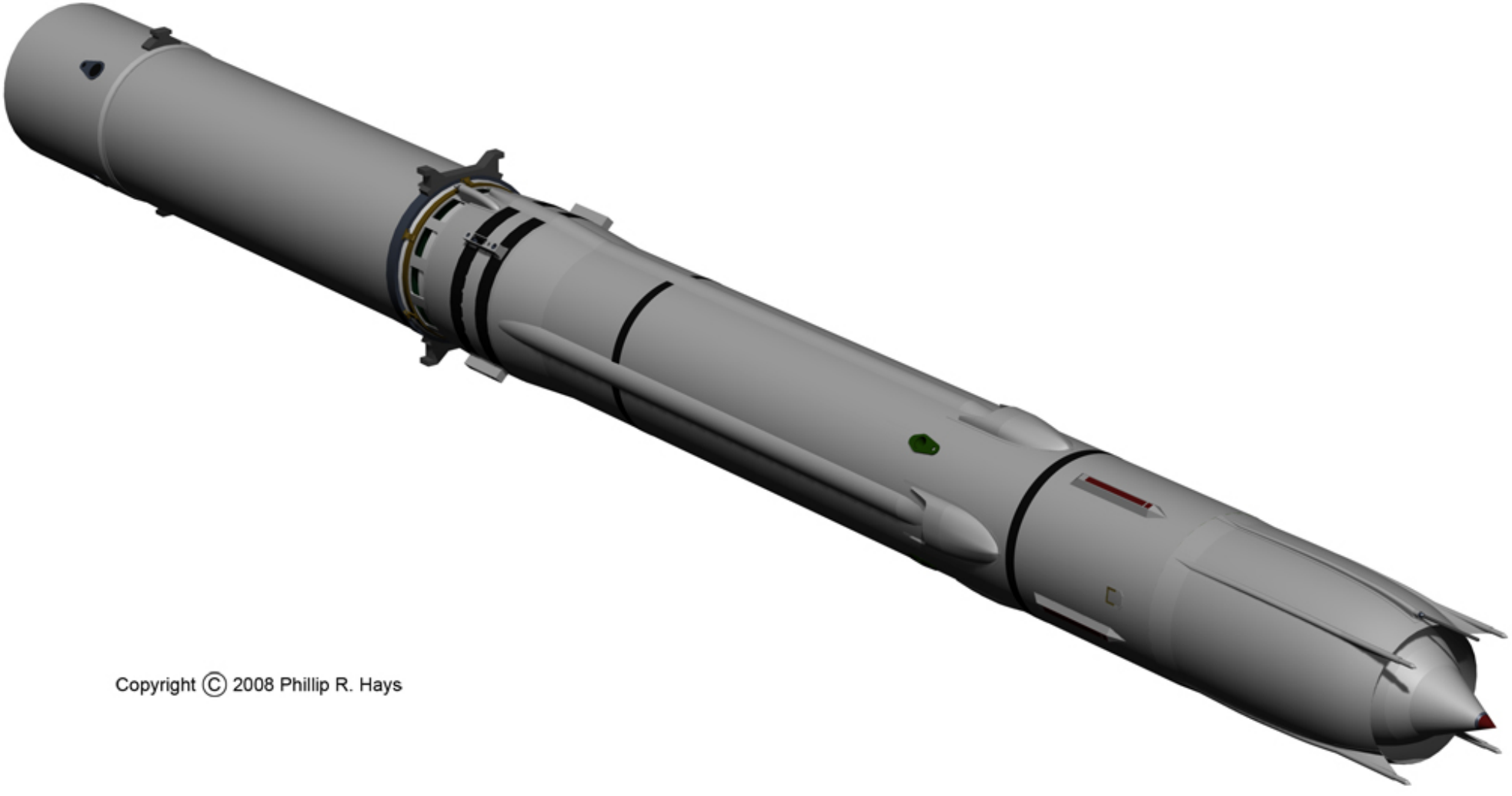

Copyright © 2008 Phillip R. Hays

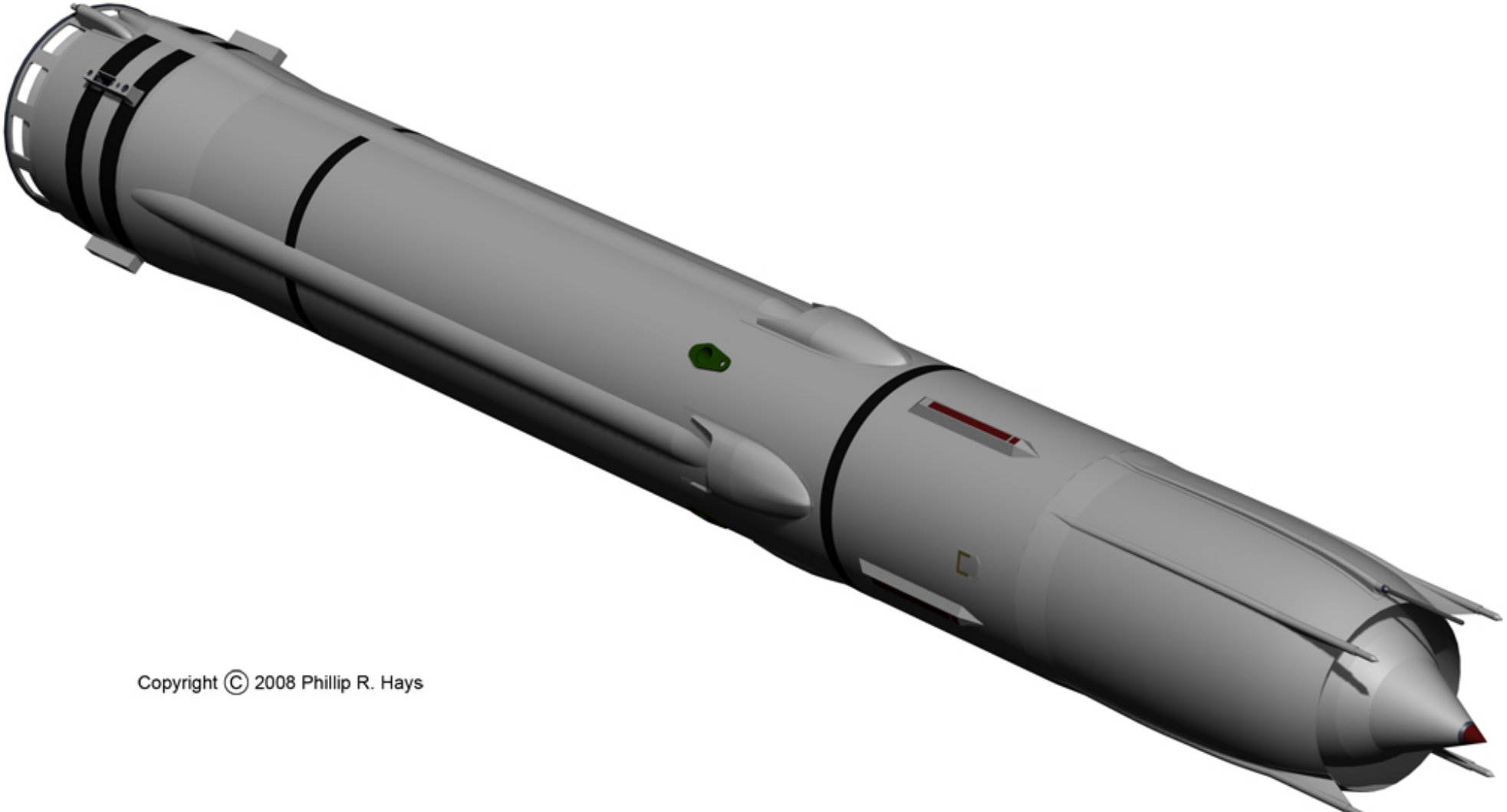

Copyright © 2008 Phillip R. Hays

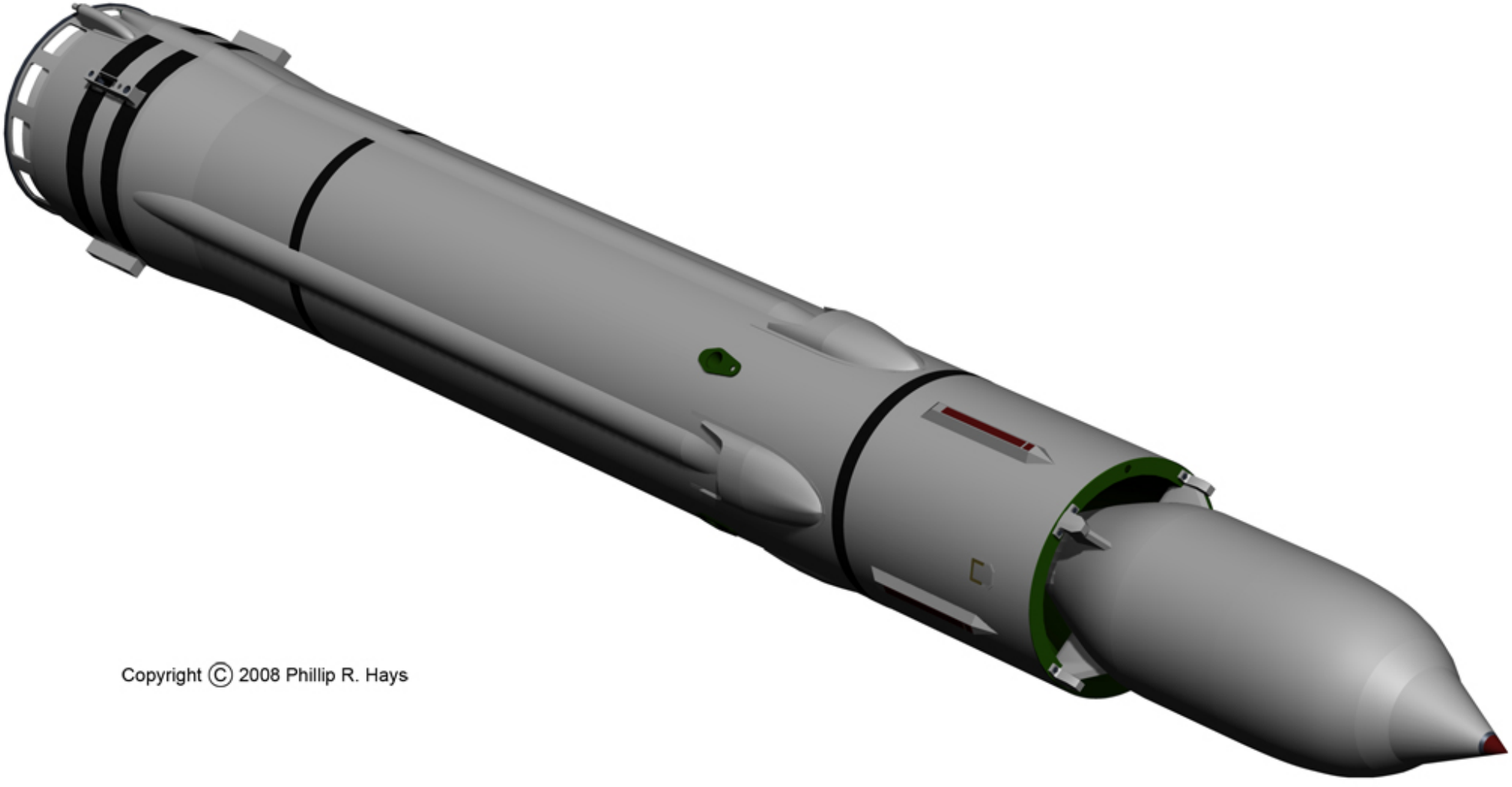

Copyright © 2008 Phillip R. Hays

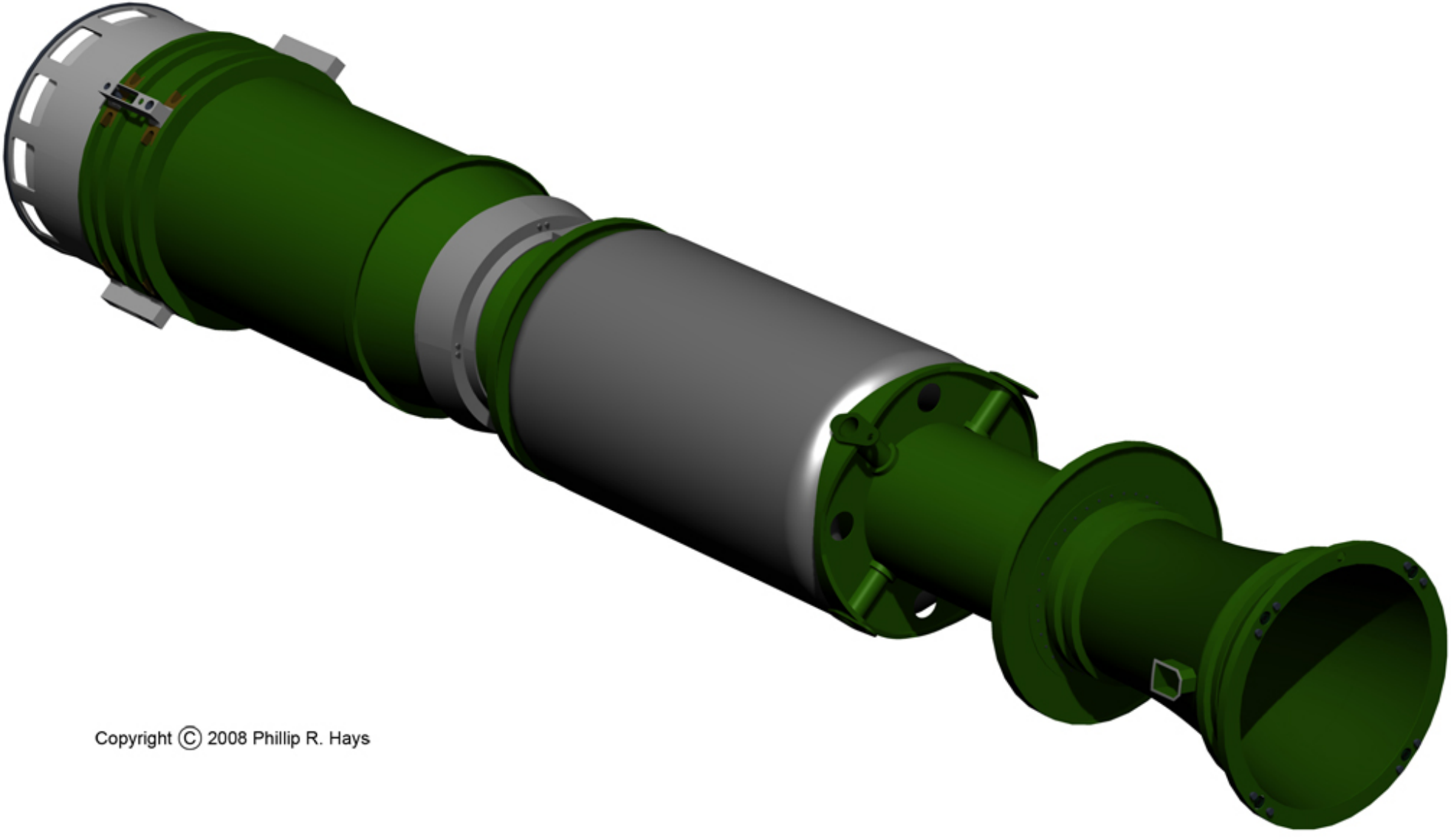

Copyright © 2008 Phillip R. Hays

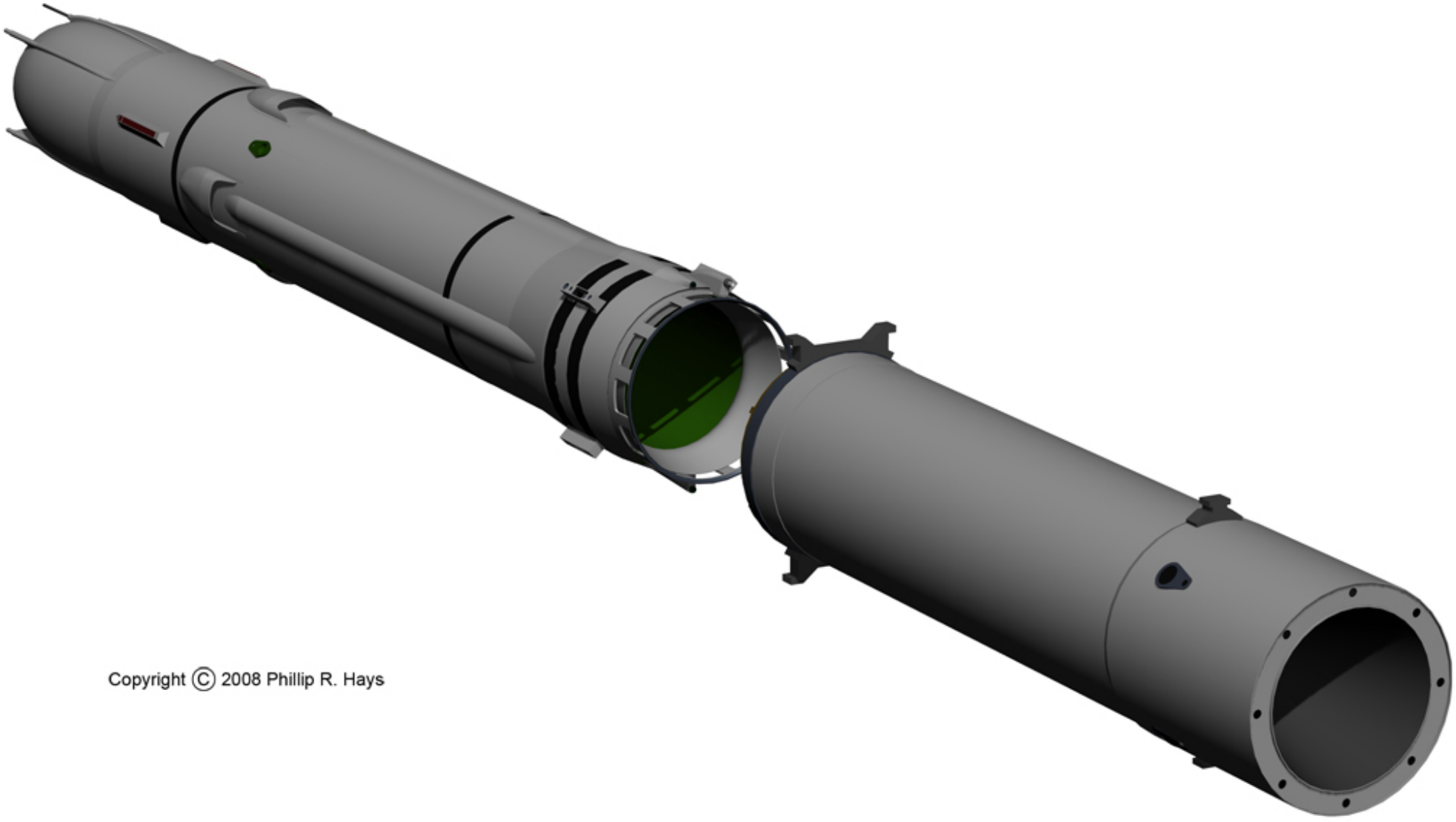

Copyright © 2008 Phillip R. Hays

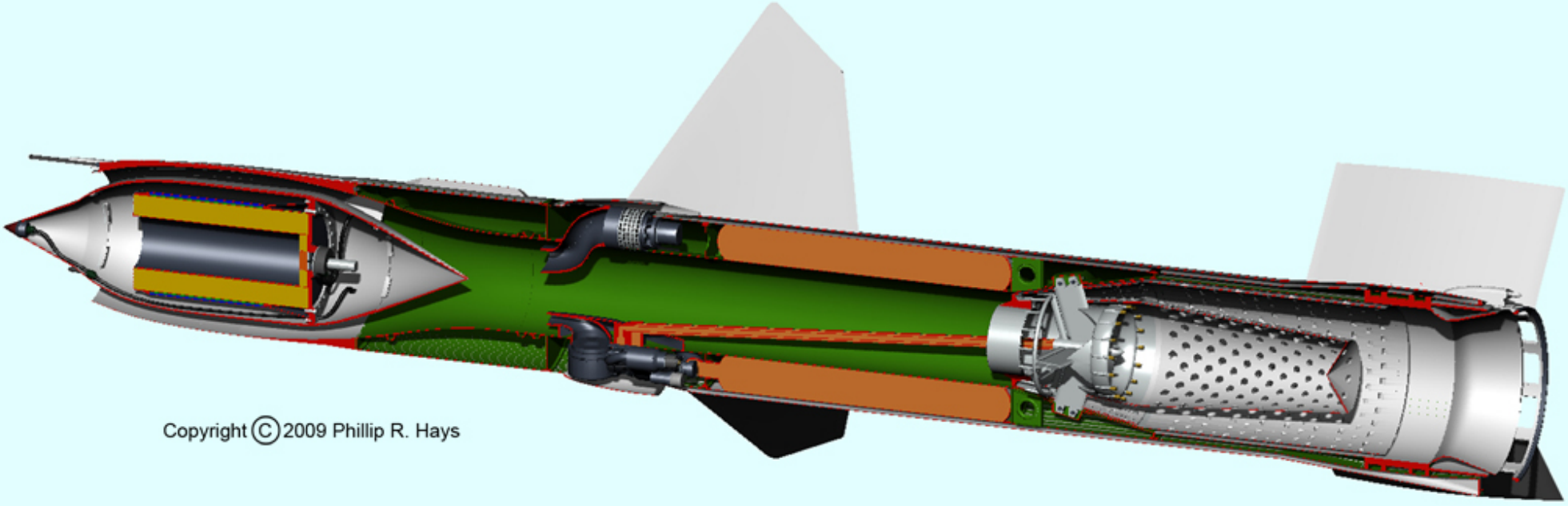

Copyright © 2009 Phillip R. Hays

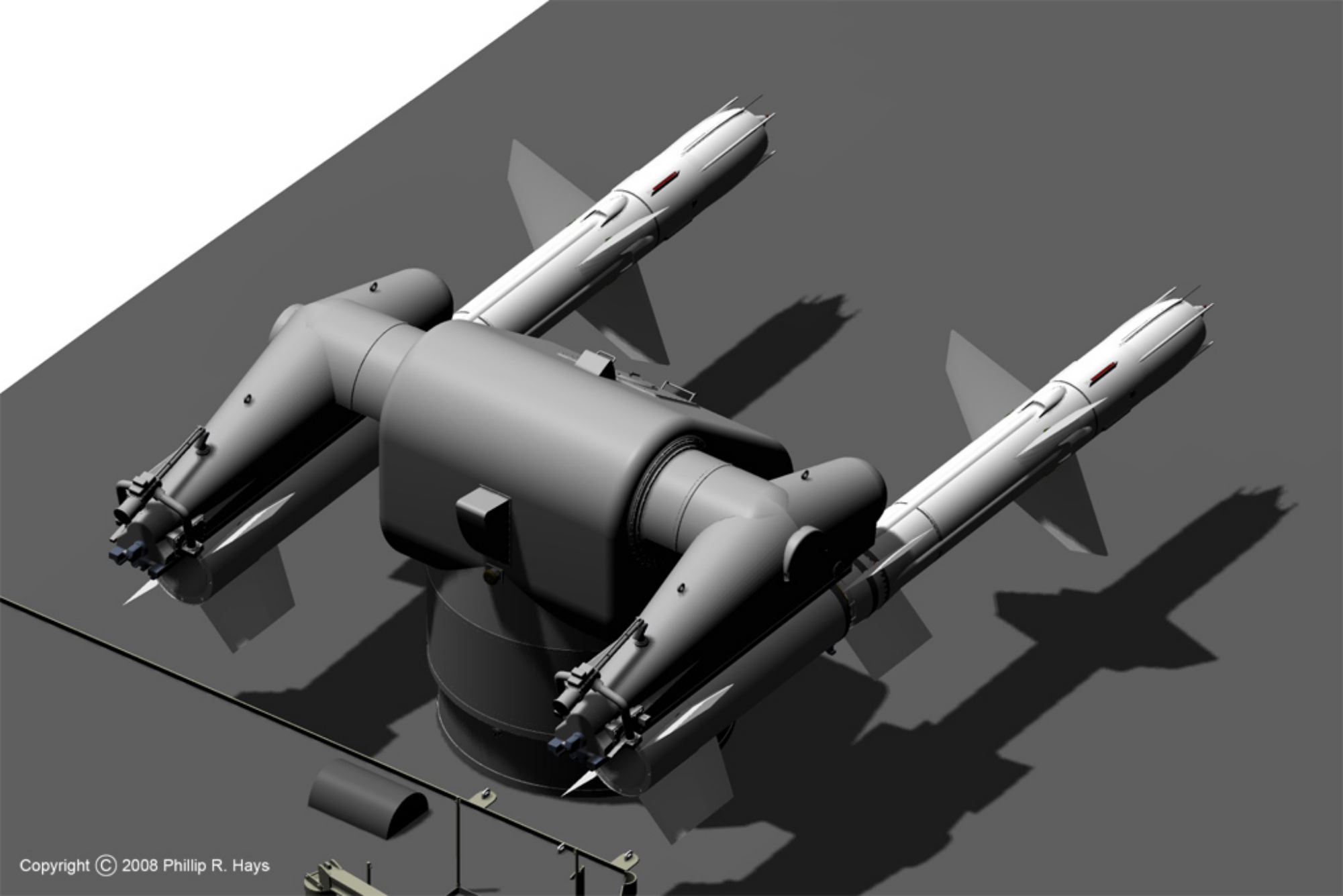
Copyright © 2008 Phillip R. Hays

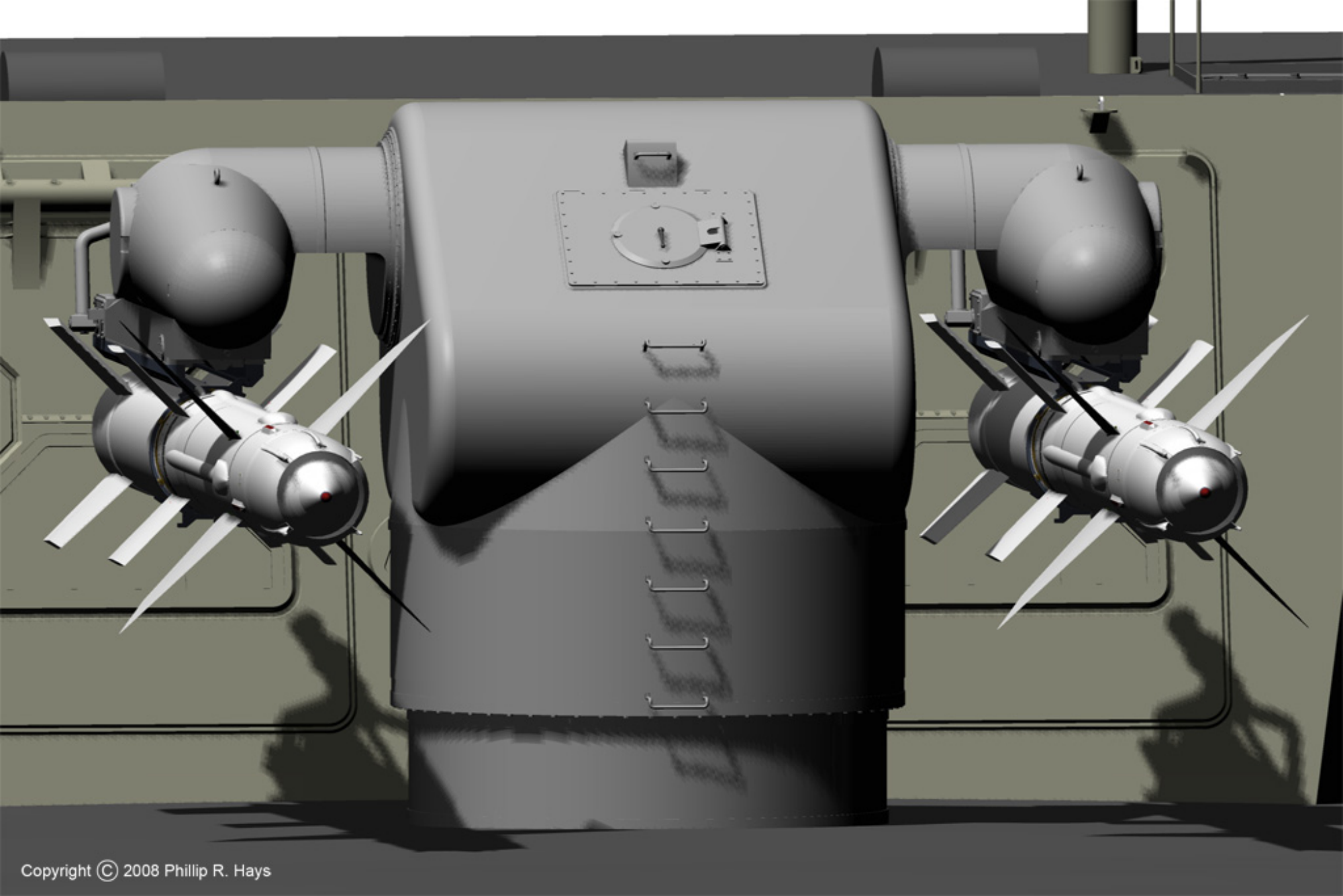
Copyright © 2008 Phillip R. Hays

Copyright © 2008 Phillip R. Hays

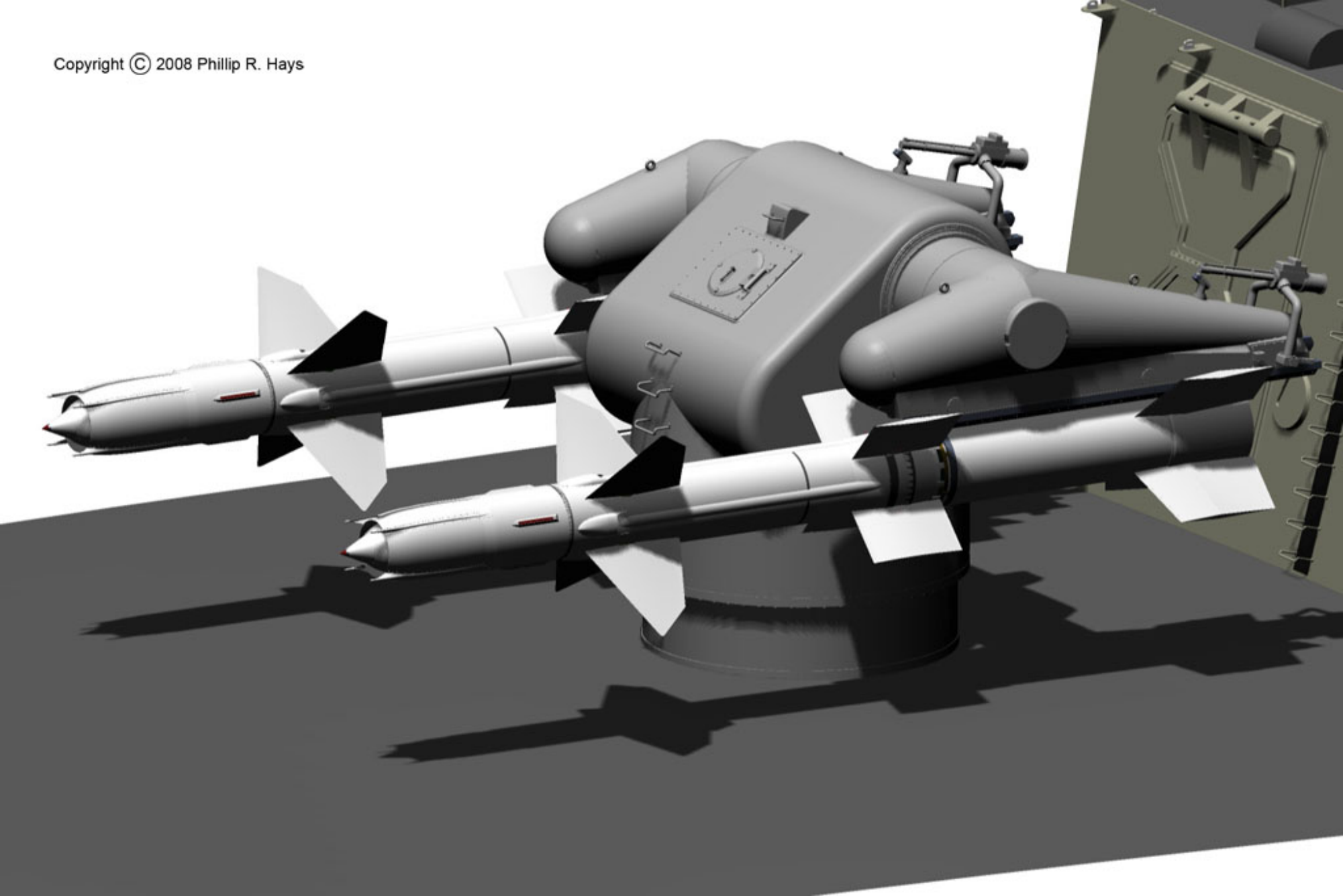

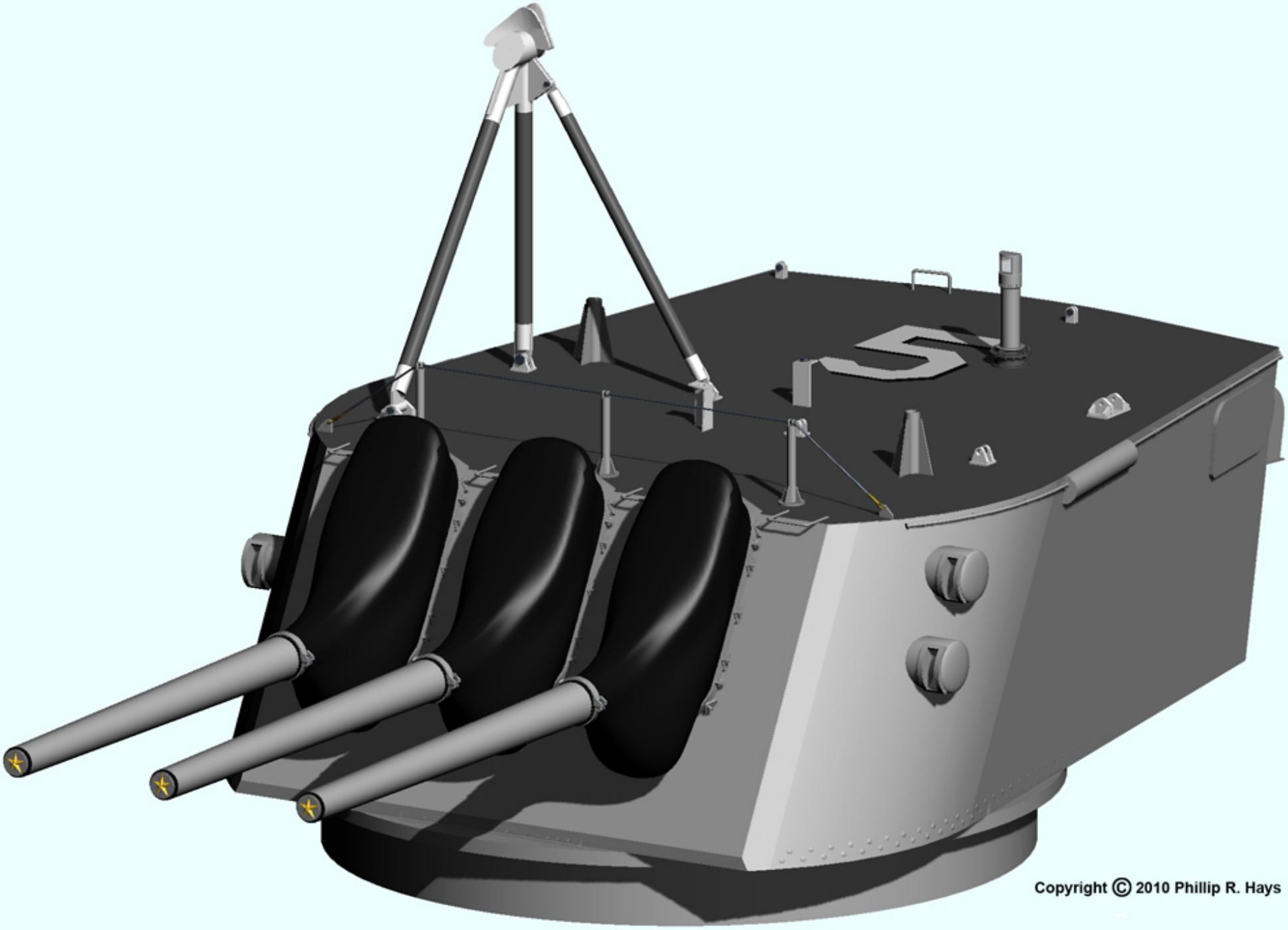
Copyright © 2010 Phillip R. Hays

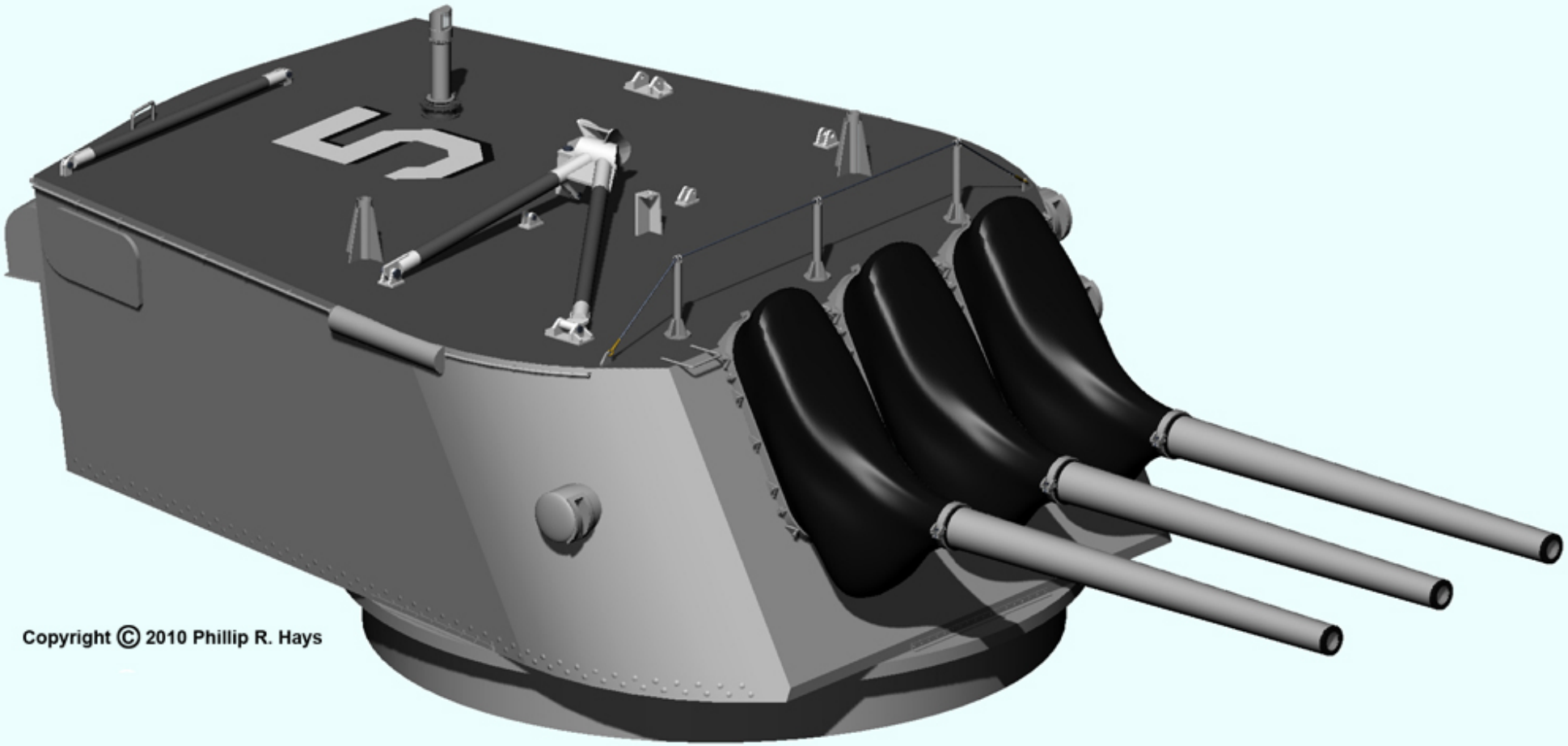

Copyright © 2010 Phillip R. Hays

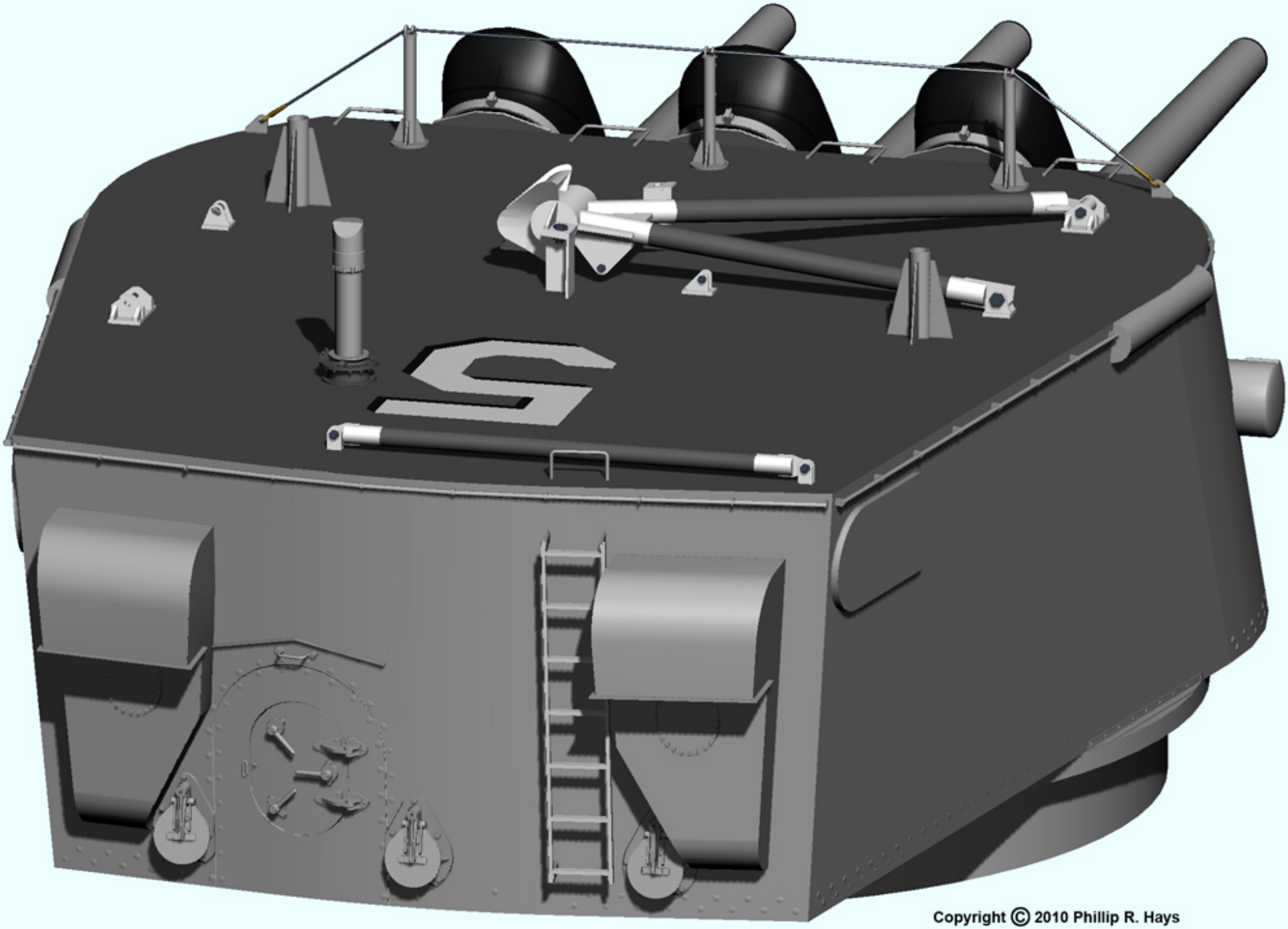

Copyright © 2010 Phillip R. Hays

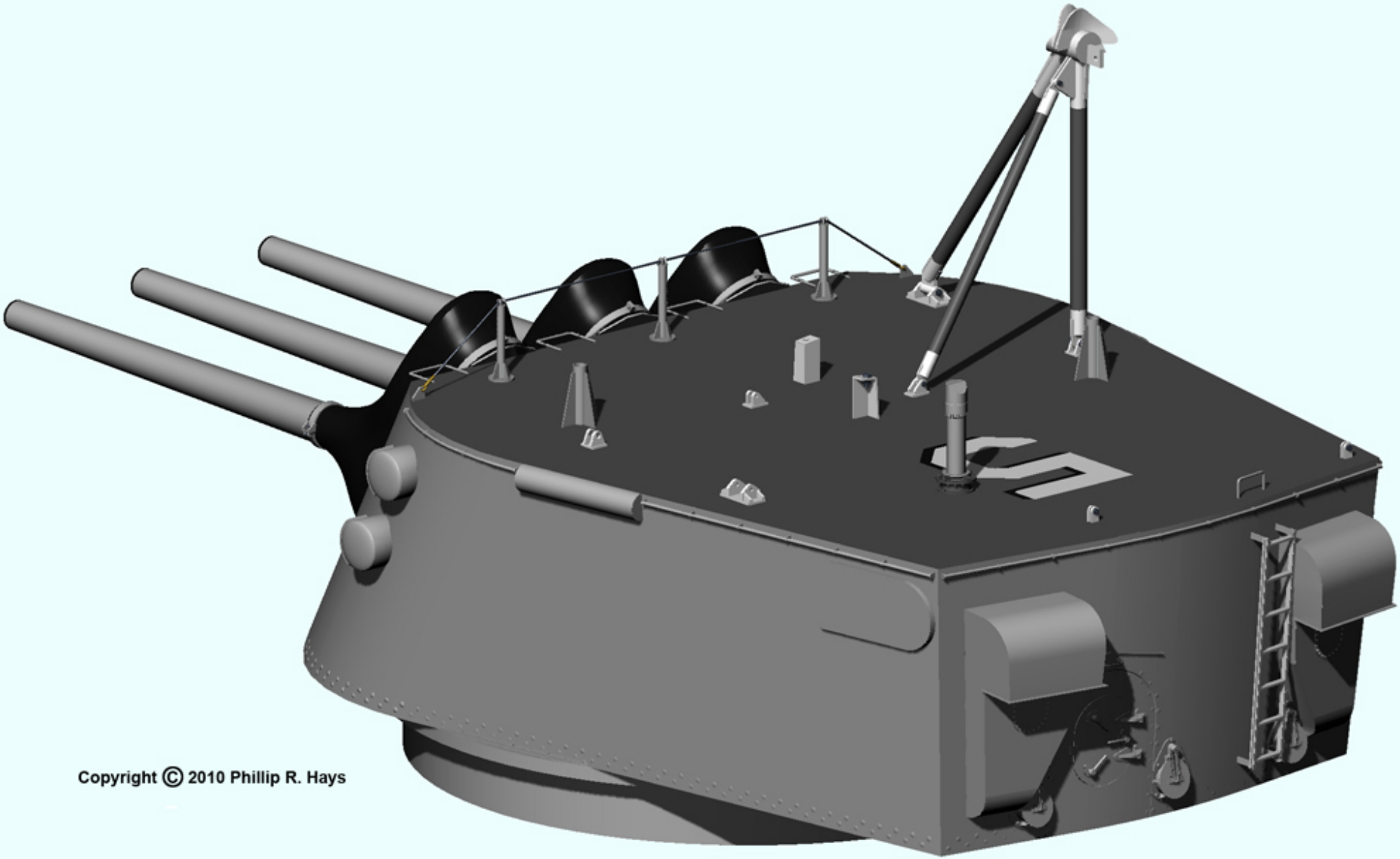

Copyright © 2010 Phillip R. Hays

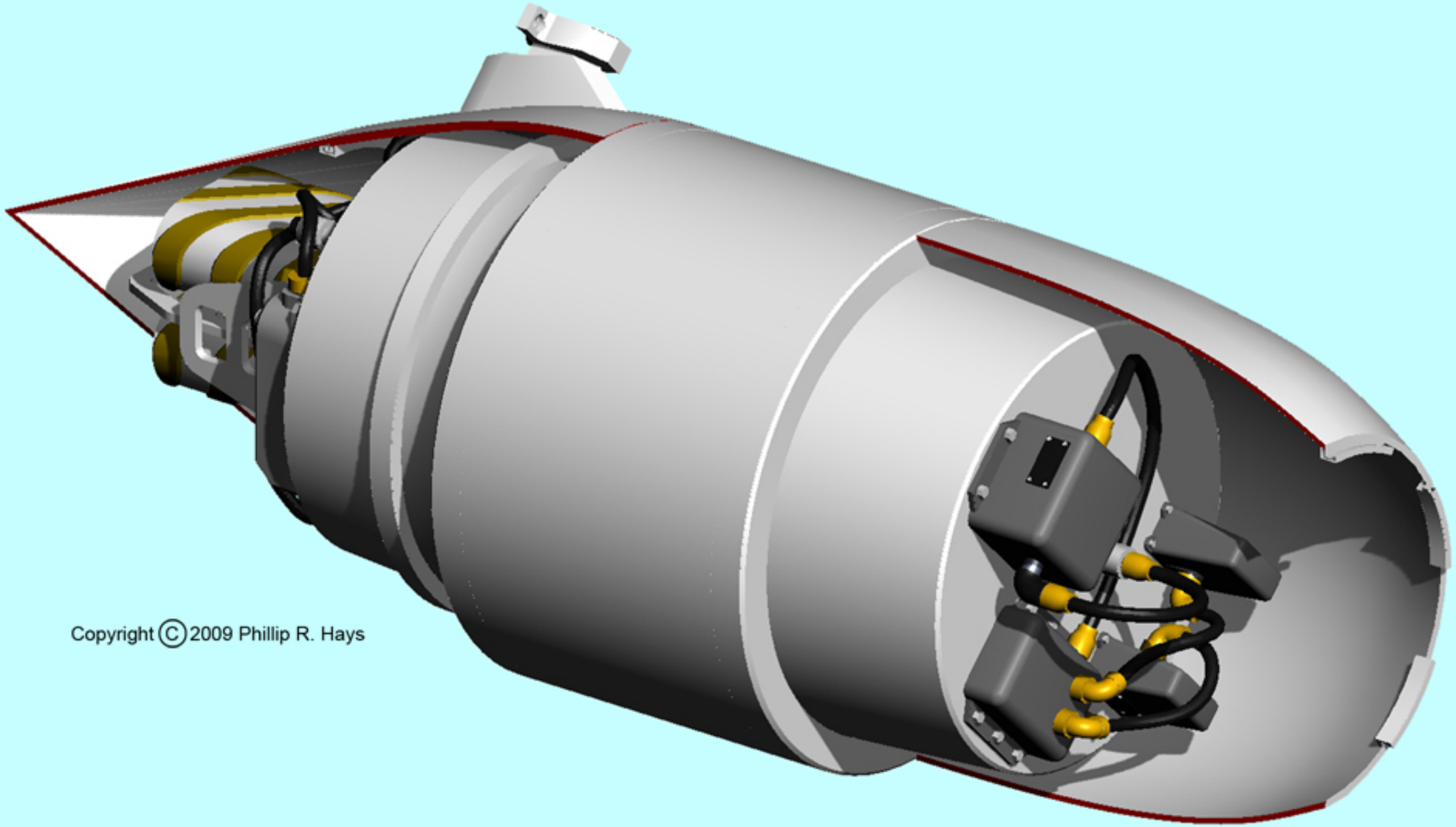
Copyright © 2009 Phillip R. Hays

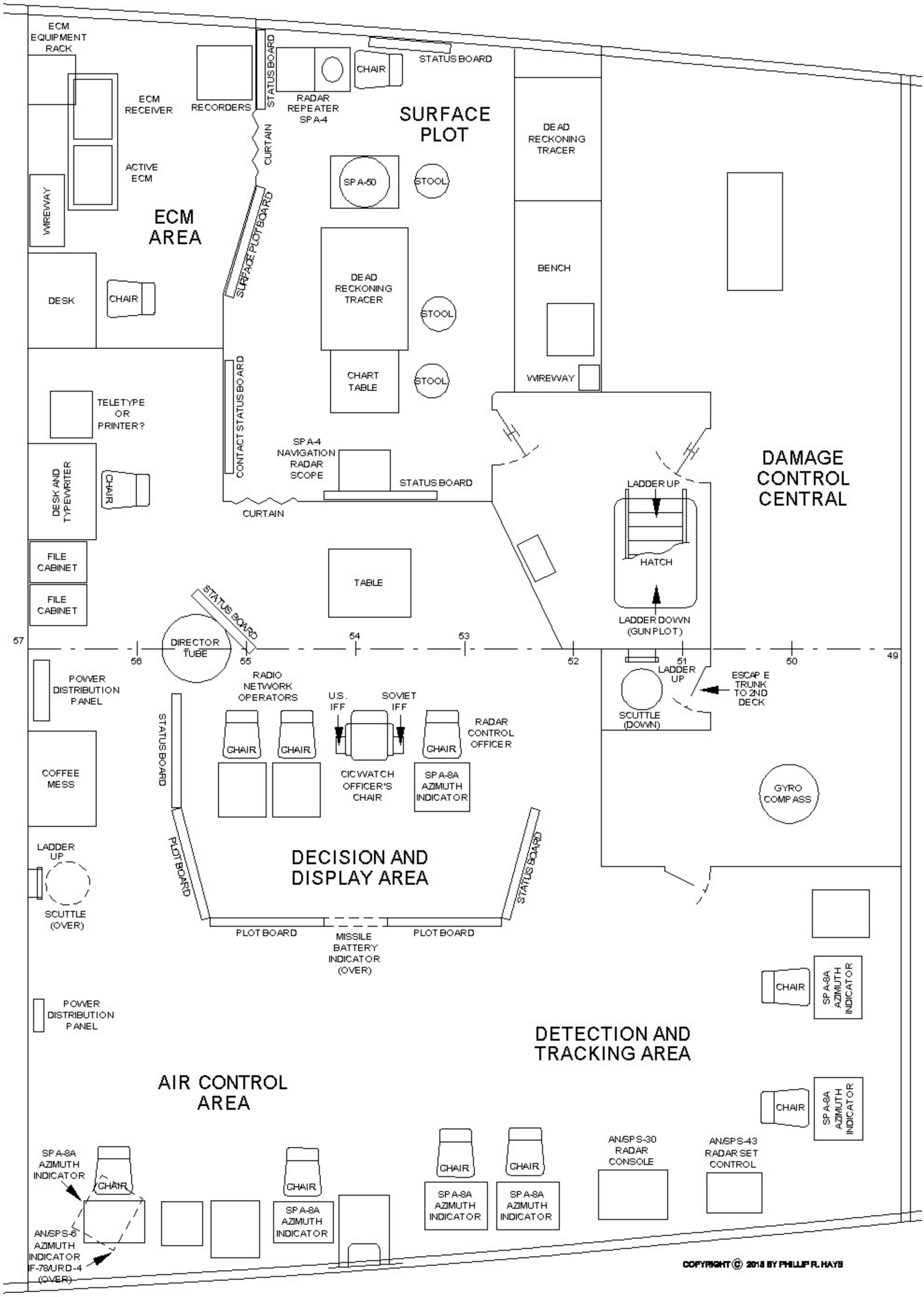

COPYRIGHT © 2018 BY PHILLIP R. HAYS

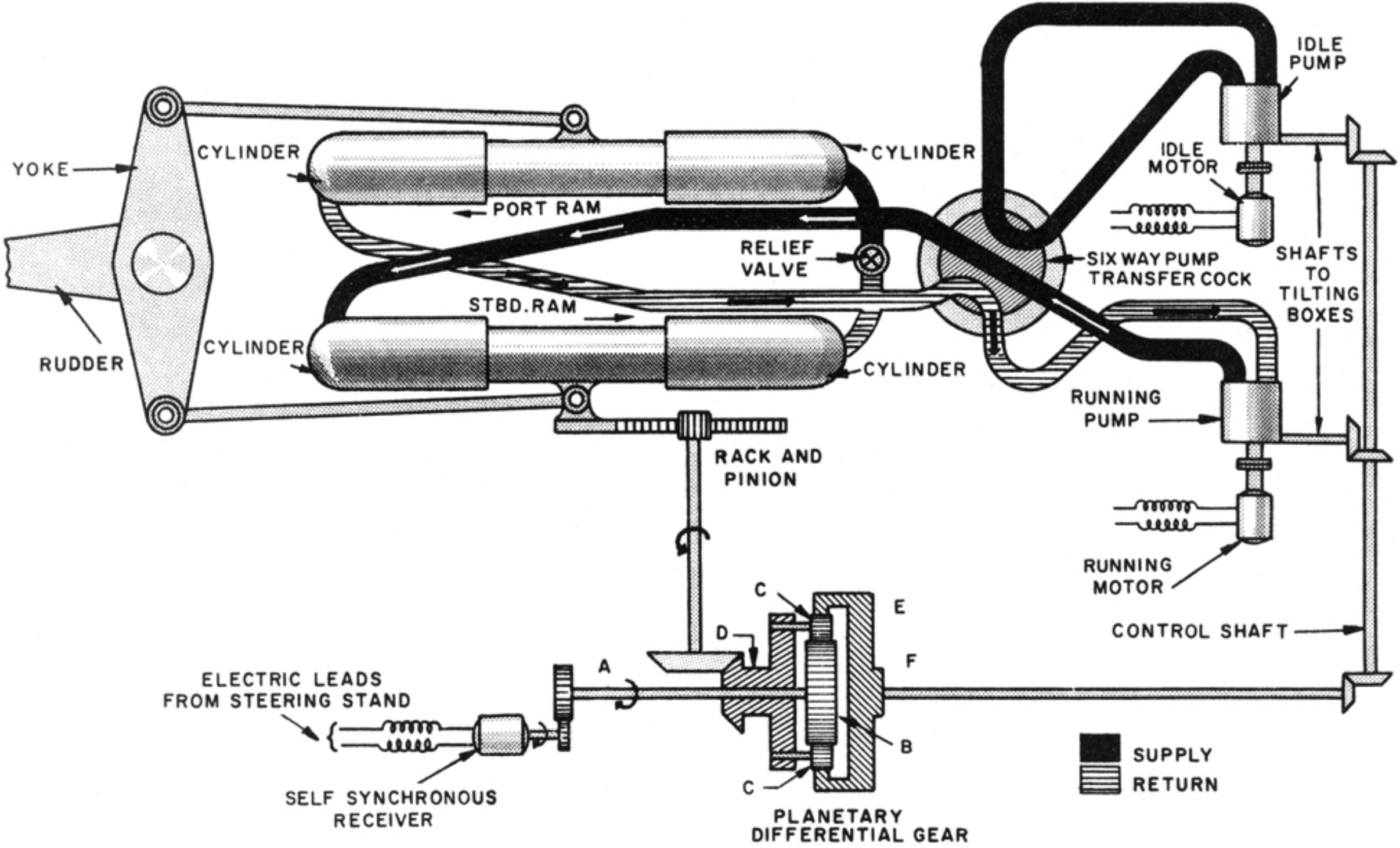
IDLE PUMP
IDLE MOTOR
YOKE
CYLINDER
CYLINDER
PORT RAM
RELIEF VALVE
SIX WAY PUMP TRANSFER COCK
SHAFTS TO TILTING BOXES
STBD. RAM
RUDDER
CYLINDER
CYLINDER
RUNNING PUMP
RACK AND PINION
RUNNING MOTOR
C
E
D
CONTROL SHAFT
A
F
ELECTRIC LEADS FROM STEERING STAND
B
C
SUPPLY
RETURN
SELF SYNCHRONOUS RECEIVER
PLANETARY DIFFERENTIAL GEAR

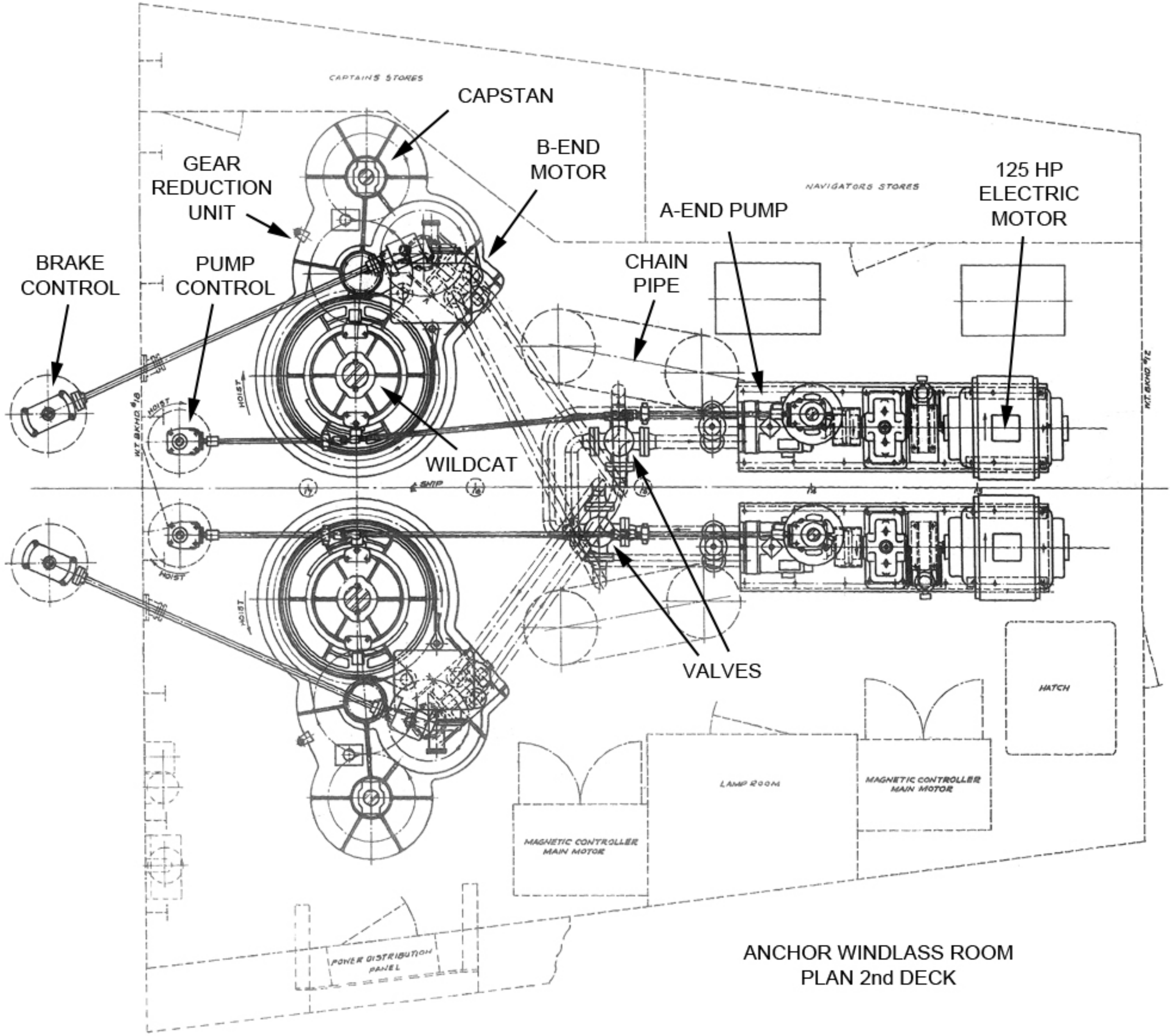

ANCHOR WINDLASS ROOM
PLAN 2nd DECK

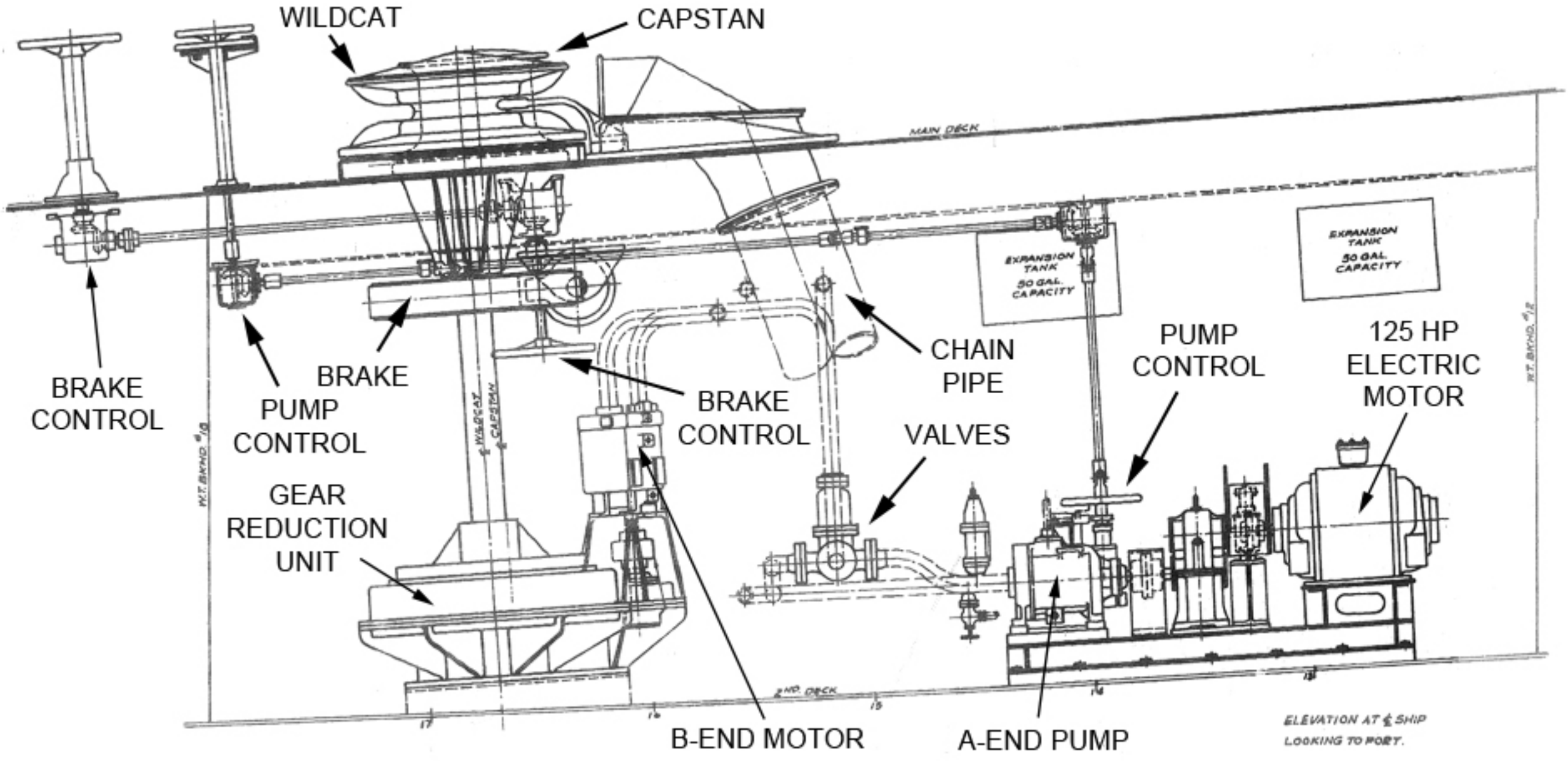
WILDCAT
CAPSTAN
MAIN DECK
EXPANSION TANK 50 GAL. CAPACITY
EXPANSION TANK 50 GAL. CAPACITY
BRAKE CONTROL
BRAKE PUMP CONTROL
BRAKE
BRAKE CONTROL
CHAIN PIPE
PUMP CONTROL
125 HP ELECTRIC MOTOR
VALVES
GEAR REDUCTION UNIT
W.T. BKHD. #13
W.T. BKHD. #12
WILDCAT & CAPSTAN
2ND. DECK
B-END MOTOR
A-END PUMP
ELEVATION AT ℄ SHIP LOOKING TO PORT.

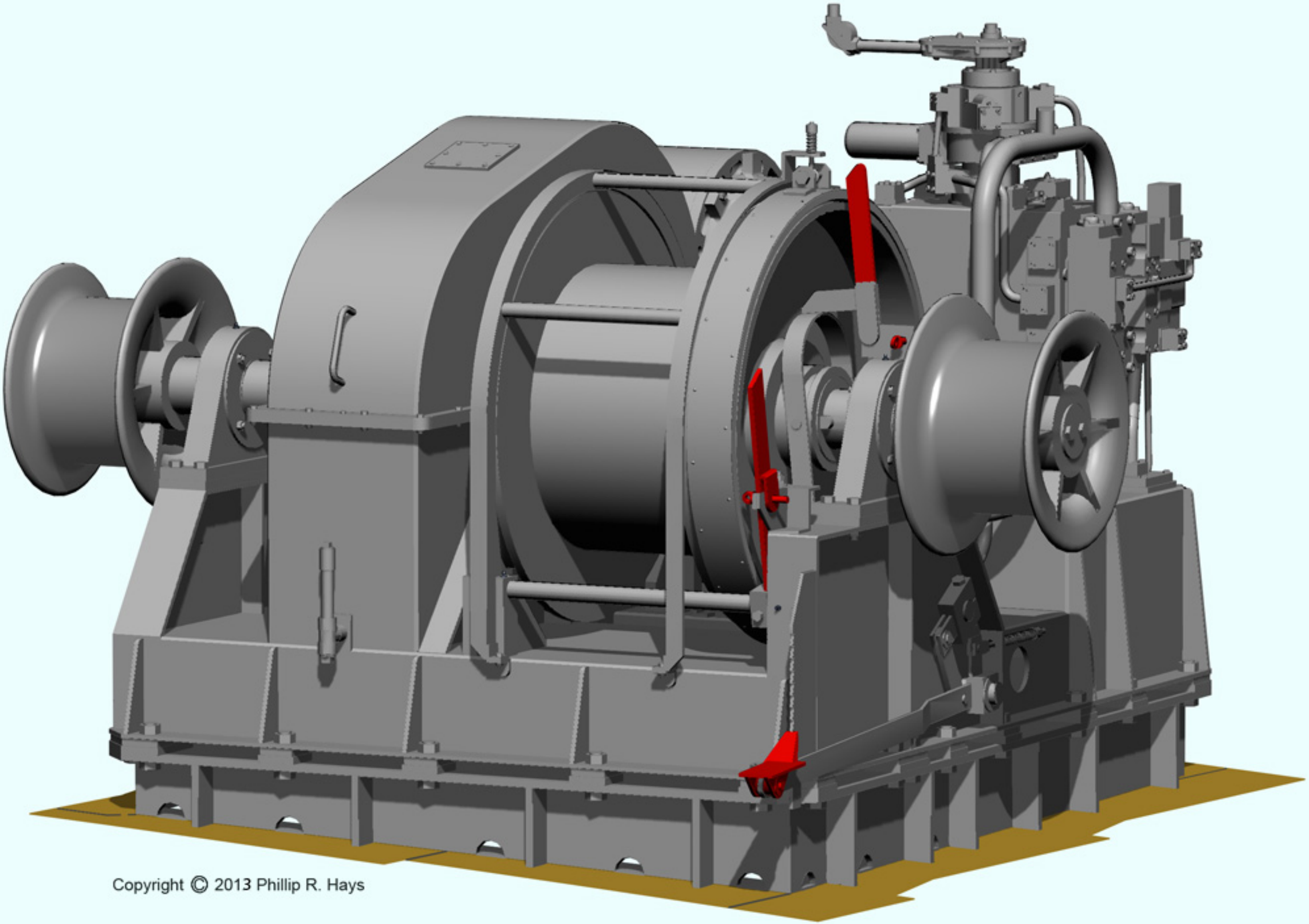

Copyright © 2013 Phillip R. Hays

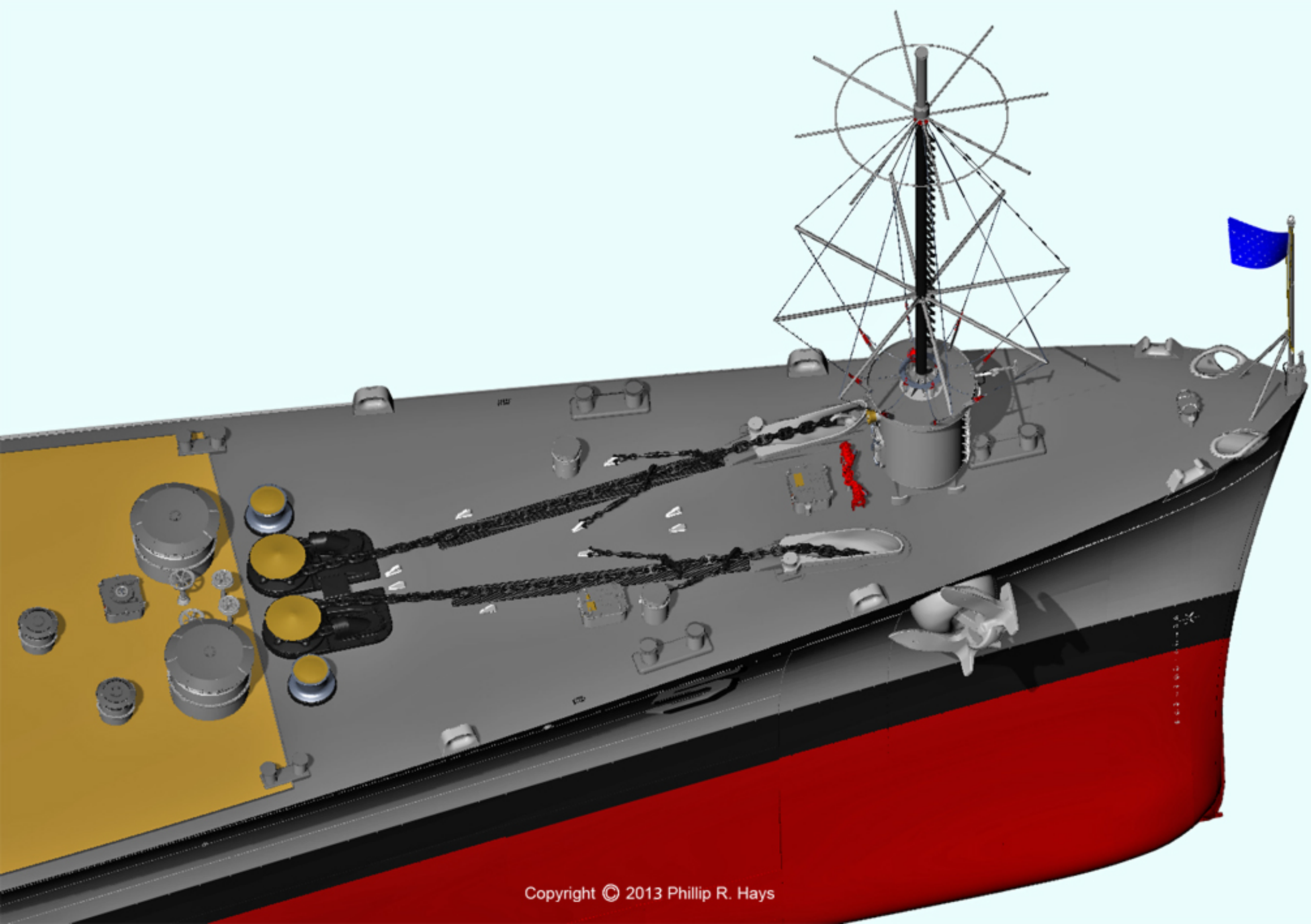
Copyright © 2013 Phillip R. Hays

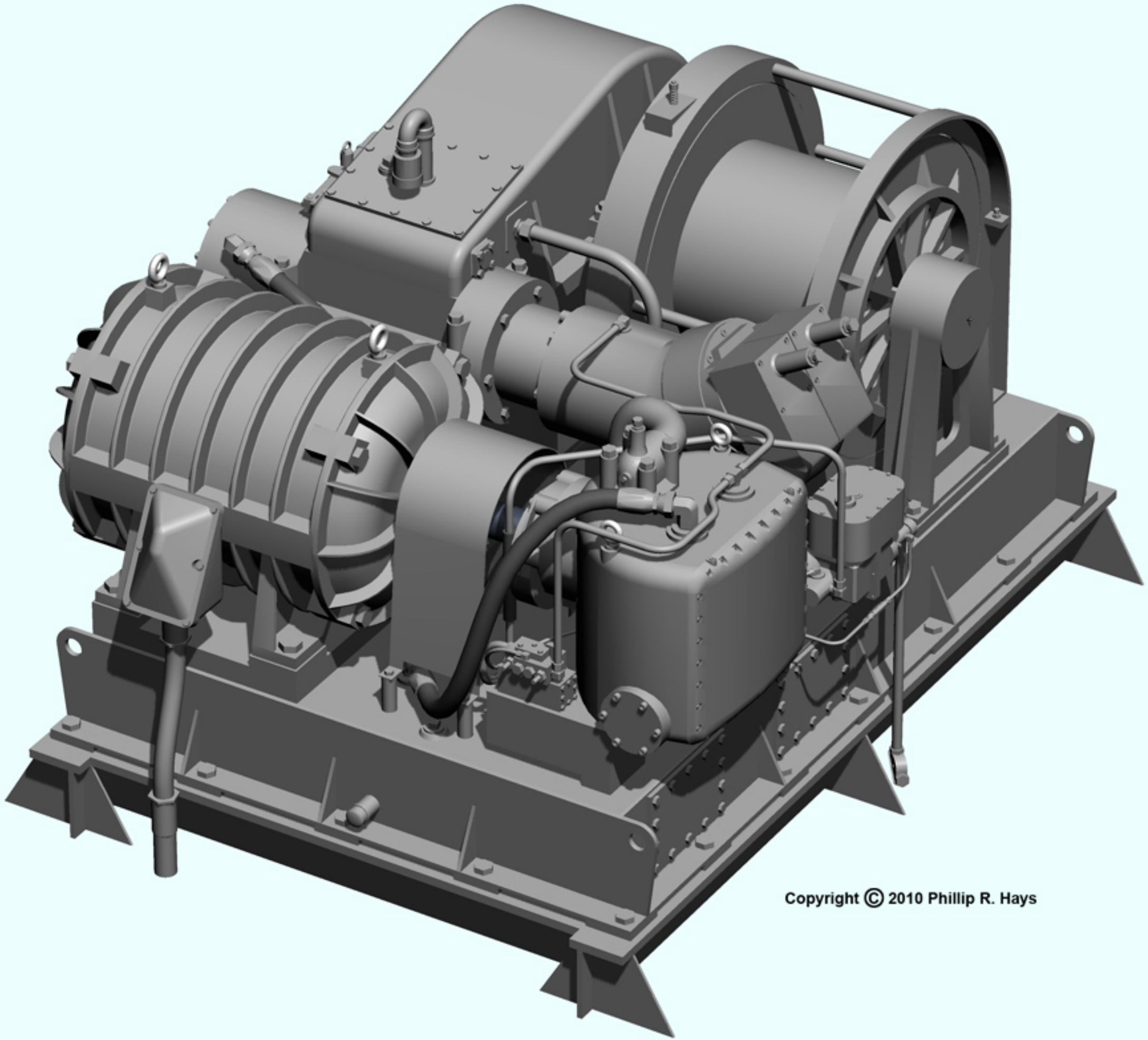

Copyright © 2010 Phillip R. Hays

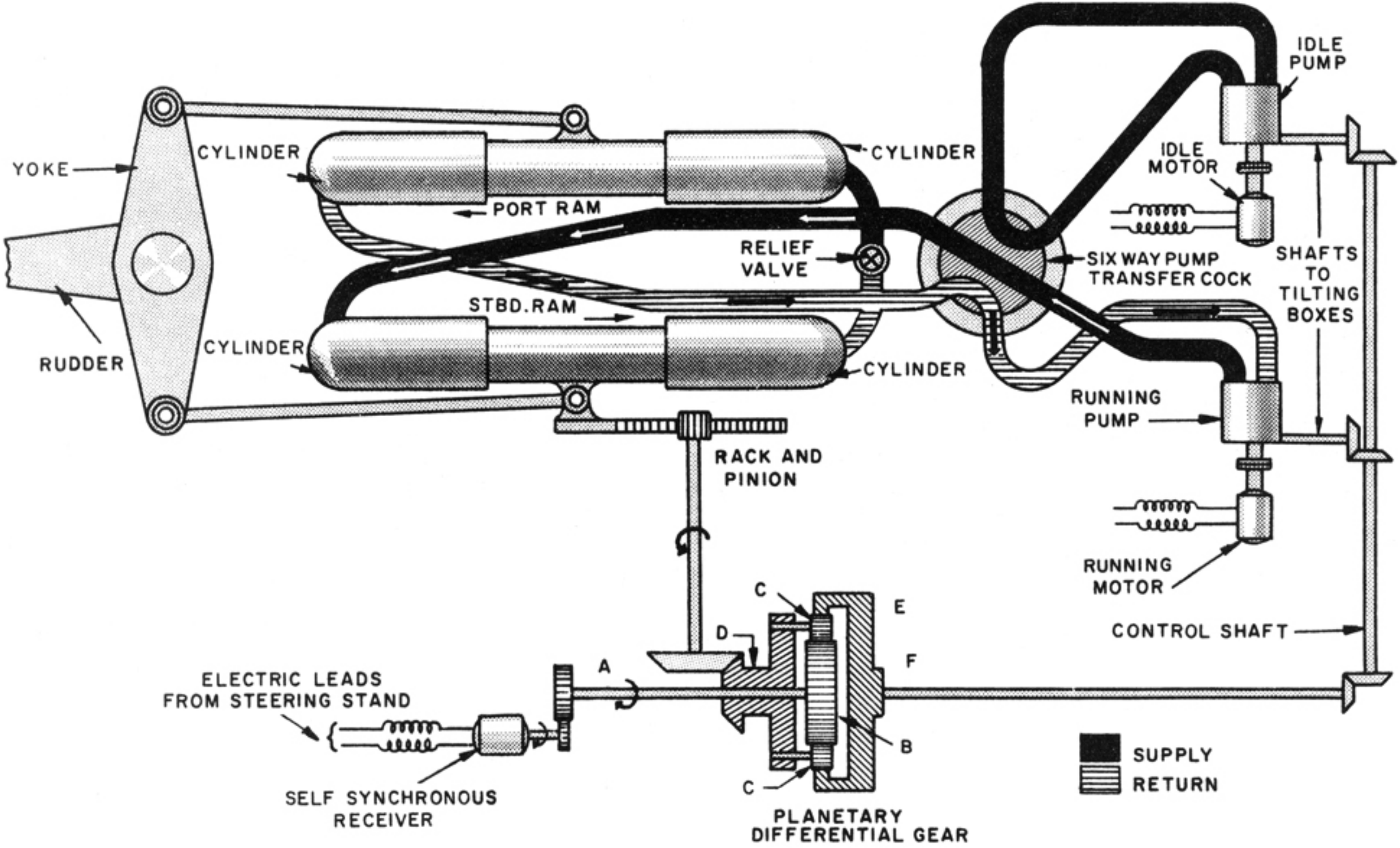
IDLE PUMP
IDLE MOTOR
YOKE
CYLINDER
CYLINDER
PORT RAM
RELIEF VALVE
SIX WAY PUMP TRANSFER COCK
SHAFTS TO TILTING BOXES
STBD. RAM
RUDDER
CYLINDER
CYLINDER
RUNNING PUMP
RACK AND PINION
RUNNING MOTOR
C
E
D
CONTROL SHAFT
A
F
ELECTRIC LEADS FROM STEERING STAND
B
C
SUPPLY
RETURN
SELF SYNCHRONOUS RECEIVER
PLANETARY DIFFERENTIAL GEAR

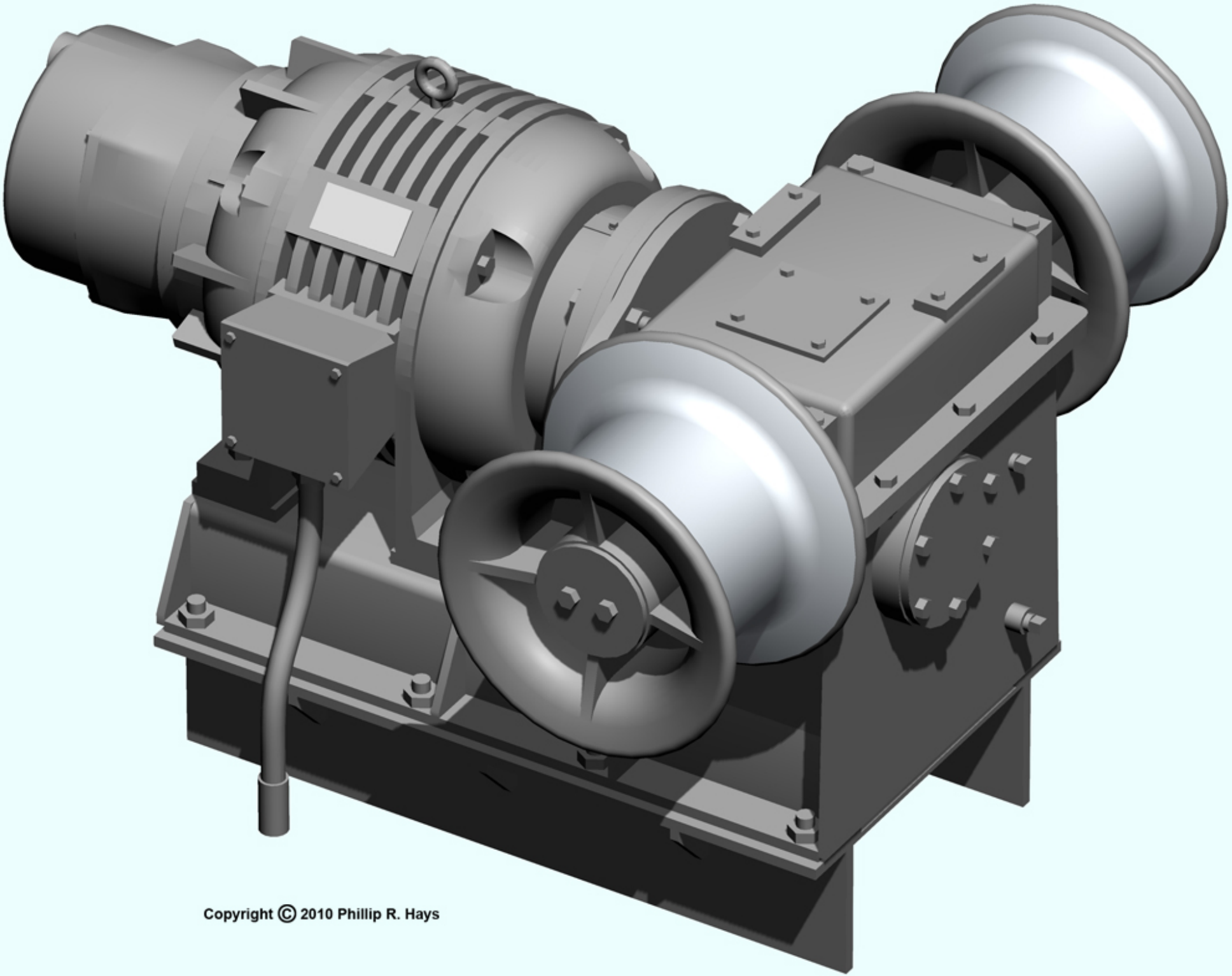

Copyright © 2010 Phillip R. Hays

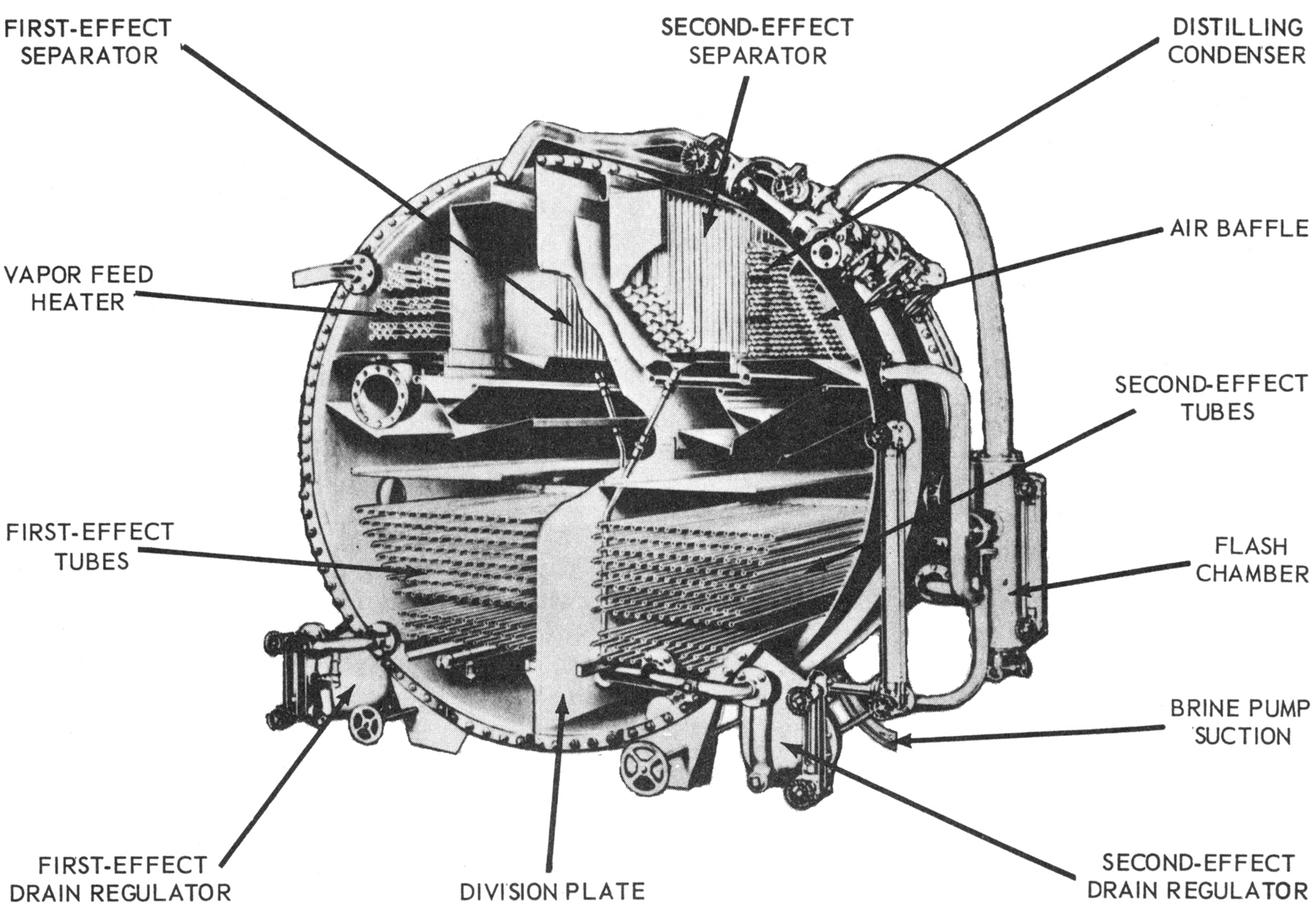
FIRST-EFFECT SEPARATOR
SECOND-EFFECT SEPARATOR
DISTILLING CONDENSER
AIR BAFFLE
VAPOR FEED HEATER
SECOND-EFFECT TUBES
FIRST-EFFECT TUBES
FLASH CHAMBER
BRINE PUMP SUCTION
FIRST-EFFECT DRAIN REGULATOR
DIVISION PLATE
SECOND-EFFECT DRAIN REGULATOR

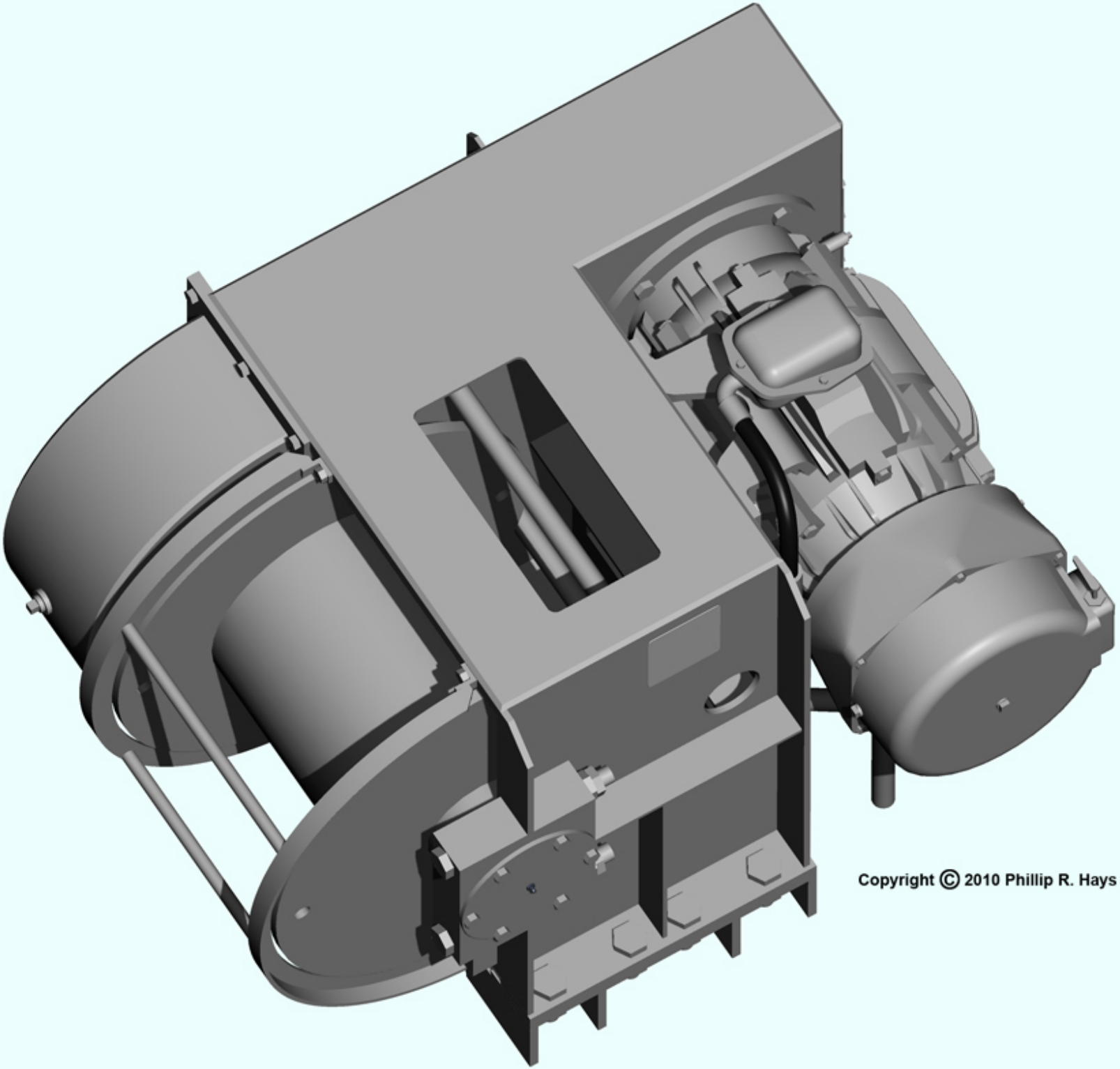

Copyright © 2010 Phillip R. Hays

SEA WATER
BRINE
STEAM
VAPOR
DISTILLATE
CONDENSATE
VAPOR AND AIR
STEAM AND AIR
TREATMENT SOLUTION

LEGEND			
	ANGLE VALVE		RELIEF VALVE
	STOP VALVE		THERMOMETER
	GATE VALVE		SALINITY CELL
	SWING CHECK VALVE		STEAM SEP'OR & TRAP
	SPRING-LOADED BACK PRESSURE VALVE	VP	COMBINATION VACUUM & PRESSURE GAGE
	MACOMB STRAINER	V	VACUUM GAGE
	WATER METER	P	PRESSURE GAGE

AIR EJECTORS
DISTILLING CONDENSER
AIR EJECTOR CONDENSER
TO 2ND EFFECT SHELL
HOSE CONN FROM FIREMAIN FOR CHILL SHOCK'G
WEIGHT-LOADED REGULATING VALVE
TREATMENT MIX'G TANK
TEST TANK
FROM 1ST EFFECT TUBE NEST
1ST EFFECT EVAPORATOR
FLUSHING PIPE
ORIFICE PLATE
TREATMENT SUPPLY TANK
2ND EFFECT EVAPORATOR
FRESH WATER PUMP
DIS-TILLATE COOLER
D'S'H' SPRAY LINE
"A"
DIS-TILLATE PUMP
OVER-BOARD BRINE PUMP
FROM VALVES MARKED "A" USED ONLY WHEN CHILL SHOCKING
DISTILLING CONDENSER CIRCULATING WATER PUMP
TUBE-NEST DRAIN PUMP

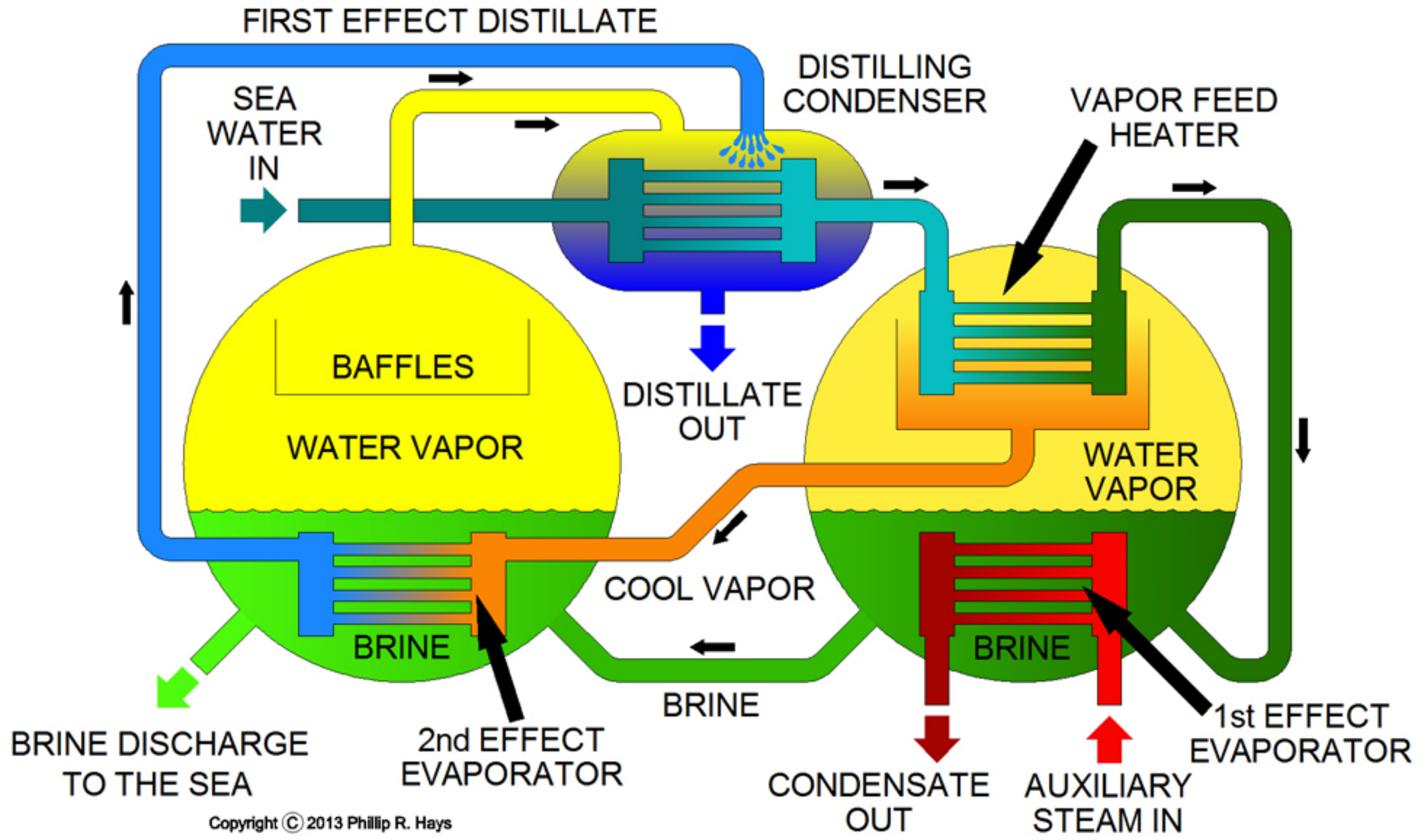

Copyright © 2013 Phillip R. Hays

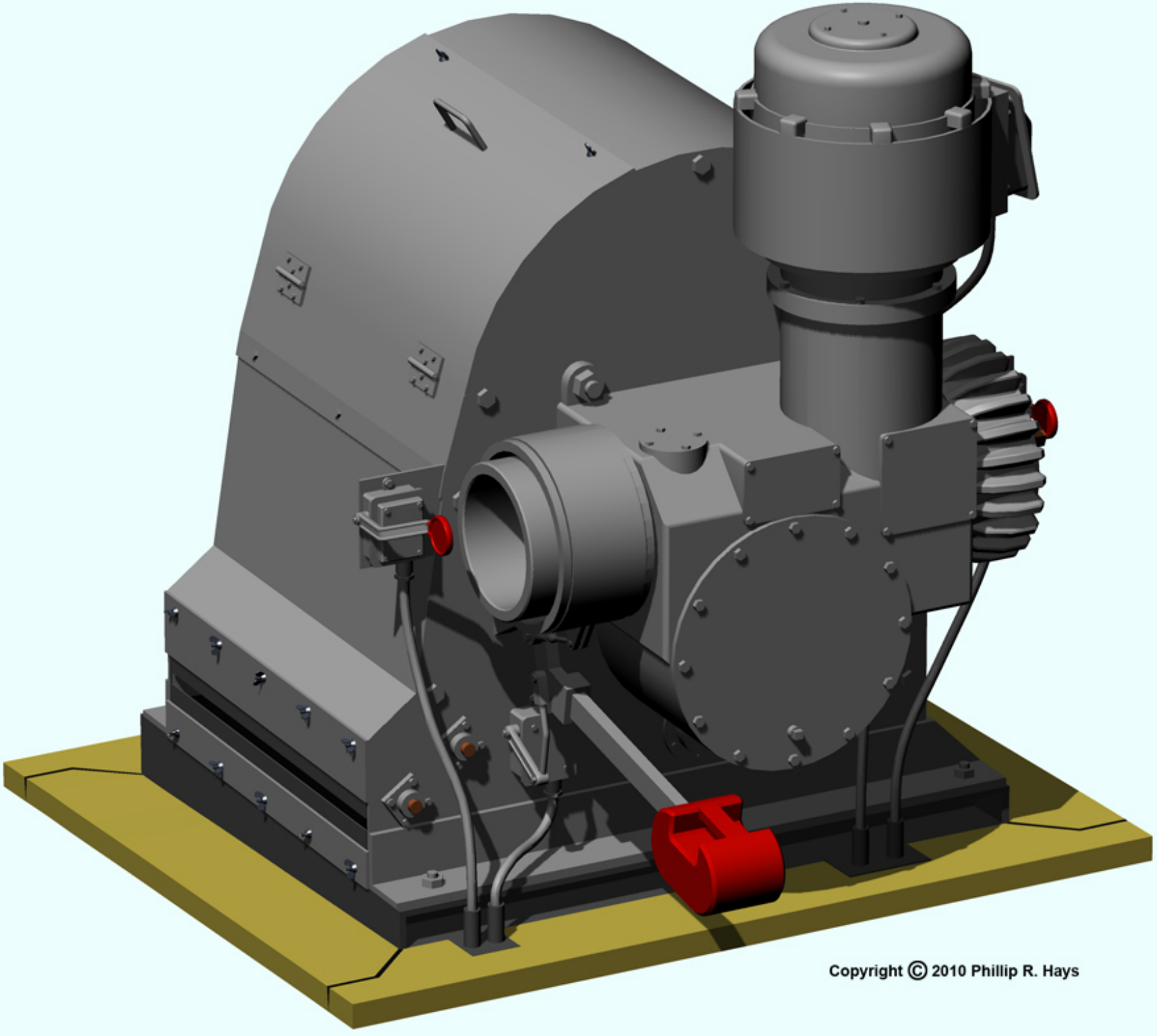
Copyright © 2010 Phillip R. Hays

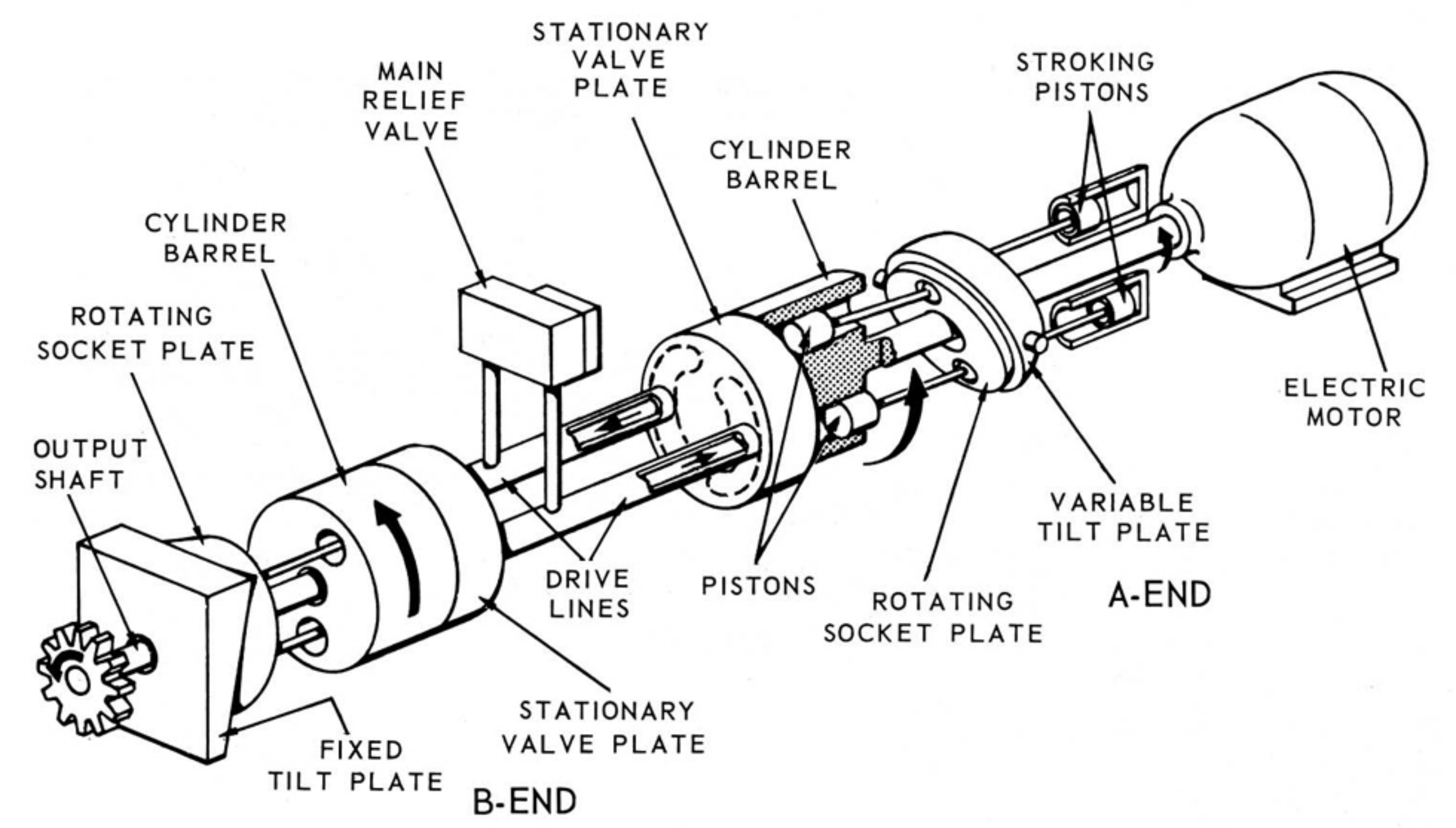
STATIONARY
VALVE
PLATE
MAIN
RELIEF
VALVE
STROKING
PISTONS
CYLINDER
BARREL
CYLINDER
BARREL
ROTATING
SOCKET PLATE
ELECTRIC
MOTOR
OUTPUT
SHAFT
VARIABLE
TILT PLATE
DRIVE
LINES
PISTONS
ROTATING
SOCKET PLATE
A-END
STATIONARY
VALVE PLATE
FIXED
TILT PLATE
B-END

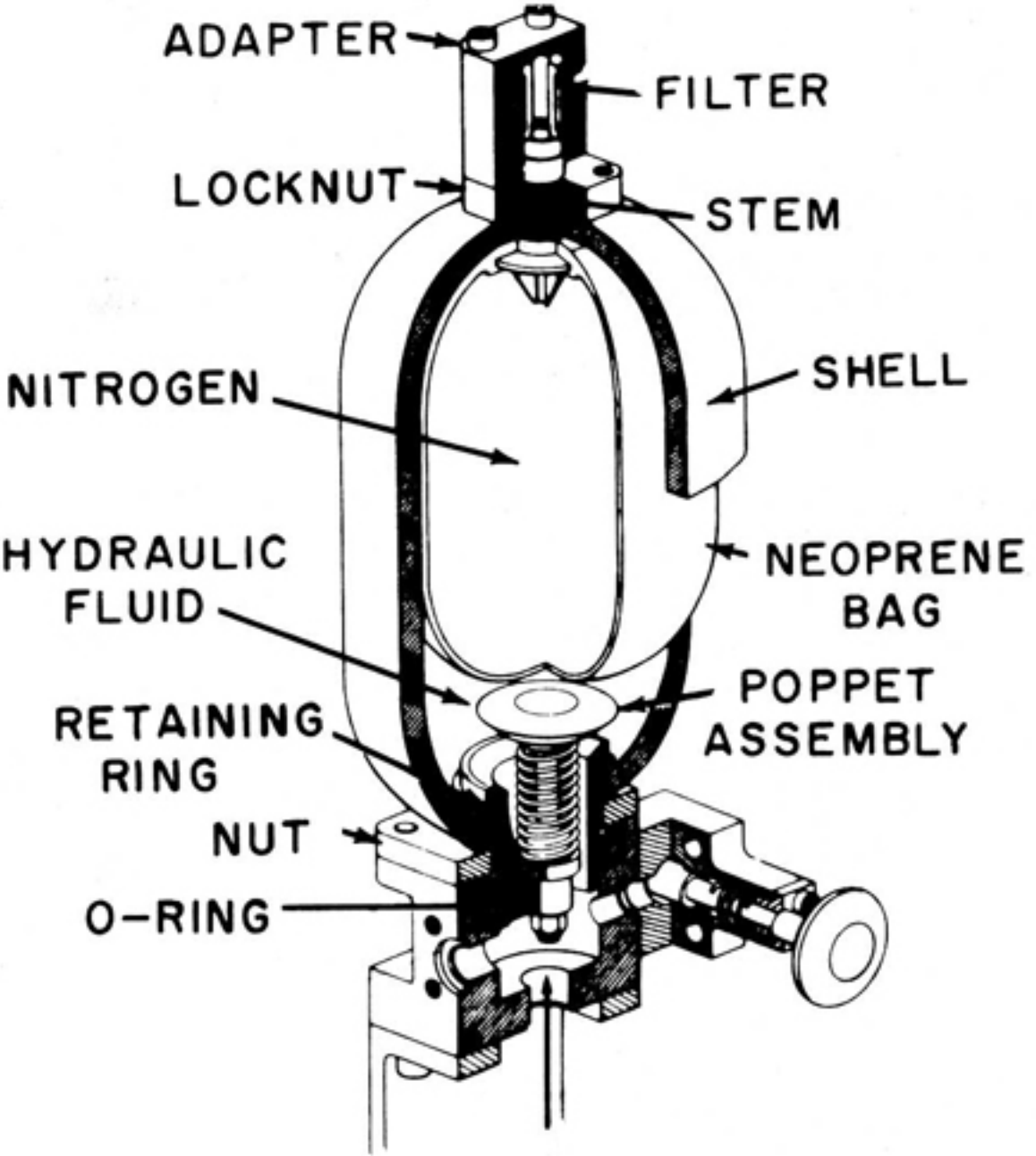
ADAPTER
FILTER
LOCKNUT
STEM
NITROGEN
SHELL
HYDRAULIC FLUID
NEOPRENE BAG
POPPET ASSEMBLY
RETAINING RING
NUT
O-RING

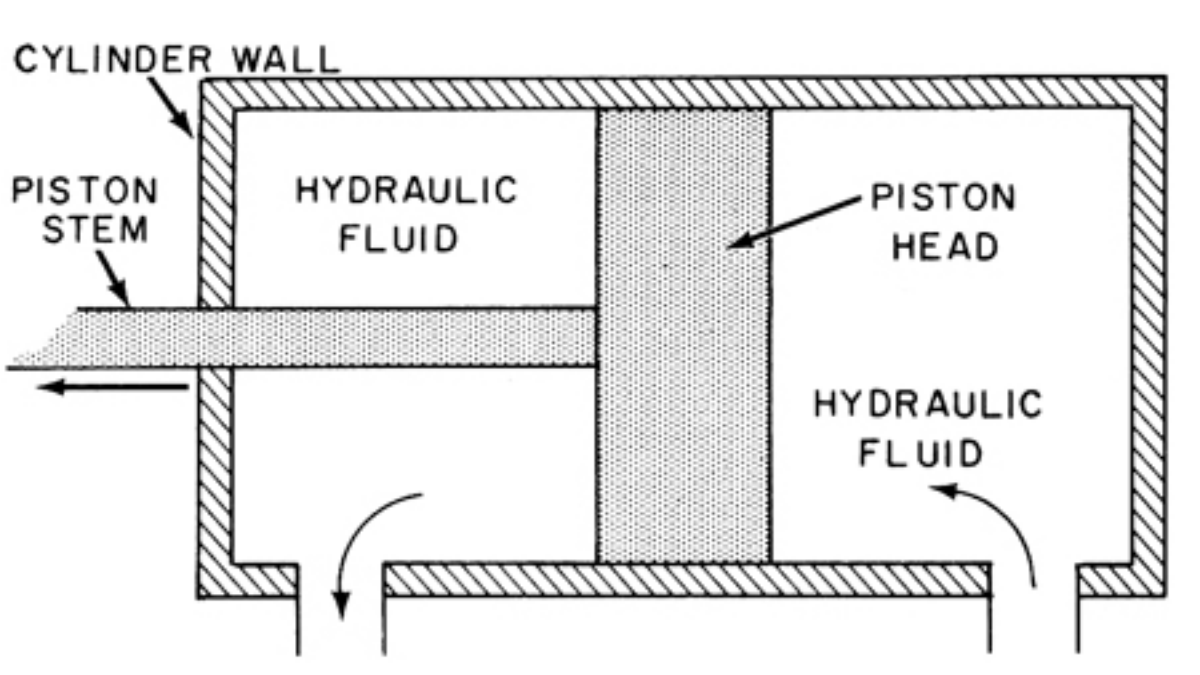
CYLINDER WALL
PISTON STEM
HYDRAULIC FLUID
PISTON HEAD
HYDRAULIC FLUID

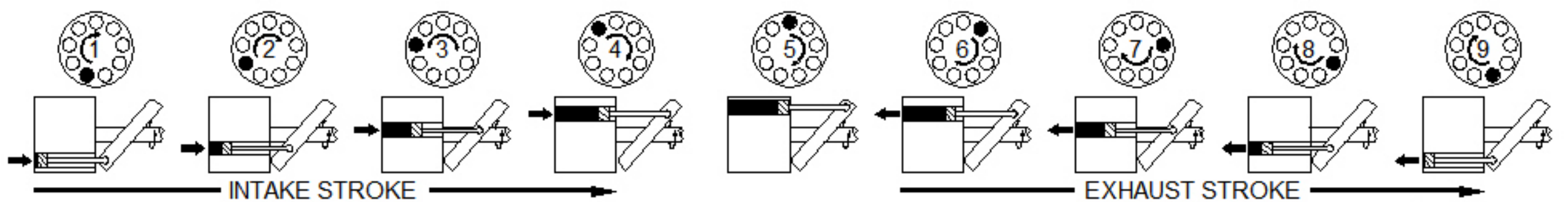

Copyright © 2013 Phillip R. Hays

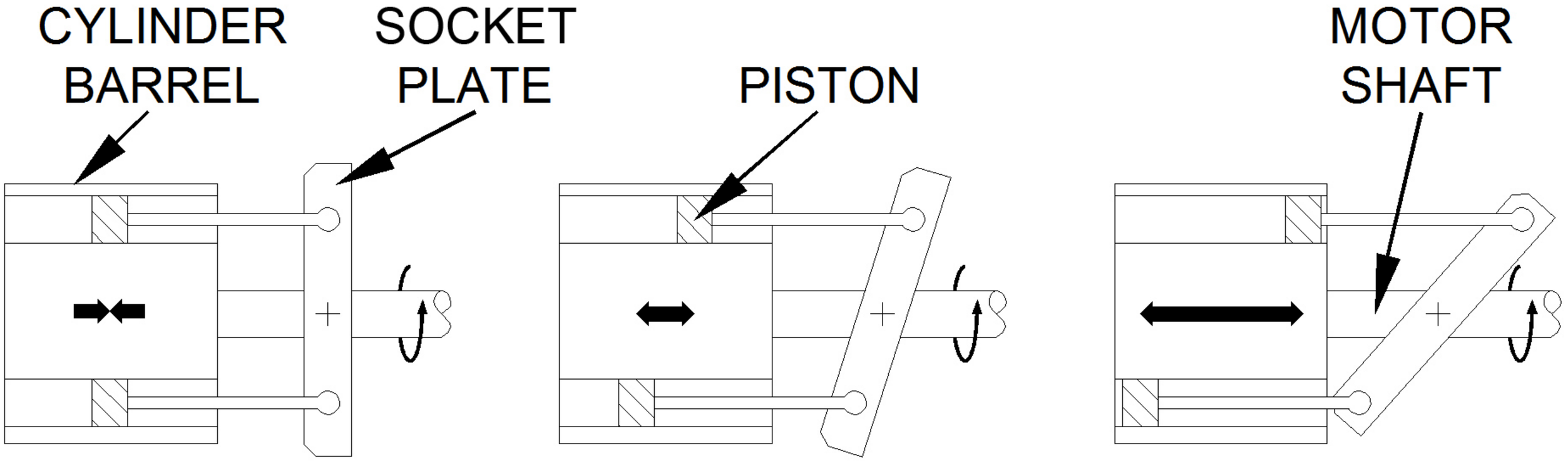

Copyright © 2013 Phillip R. Hays

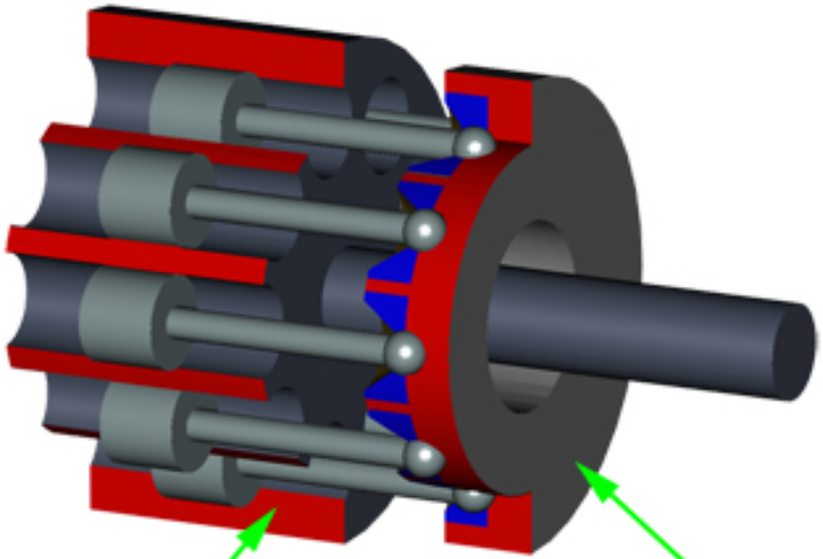

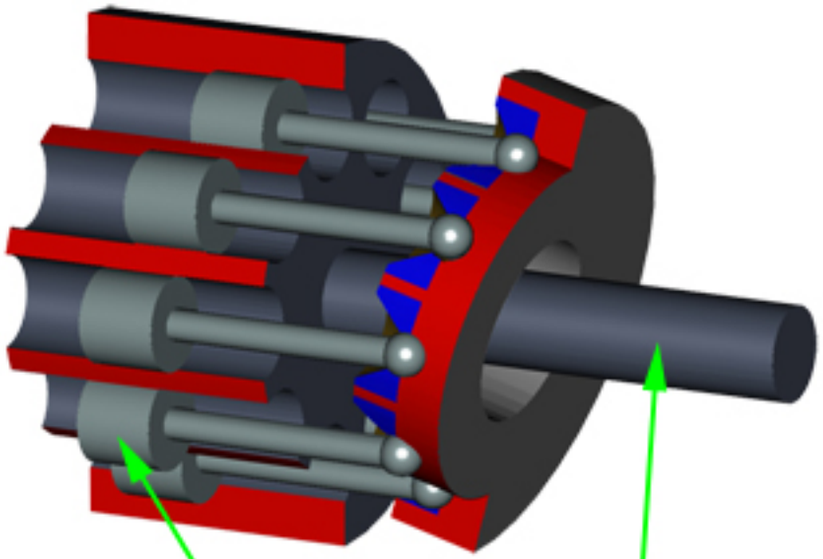

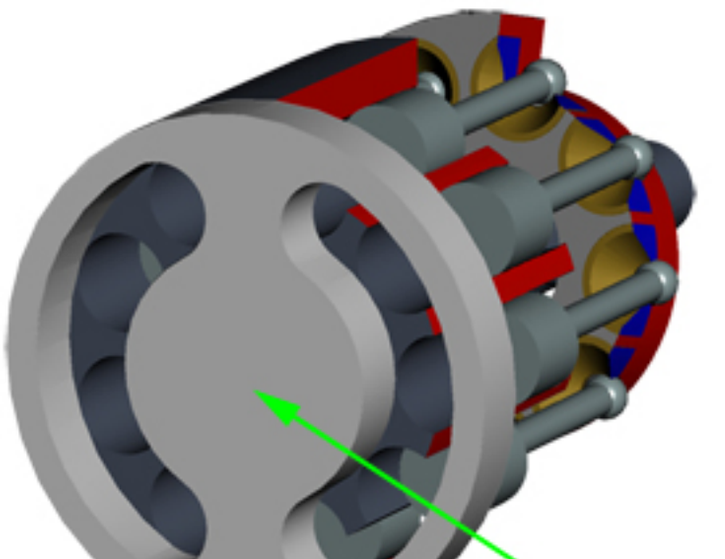

Copyright © 2013 Phillip R. Hays

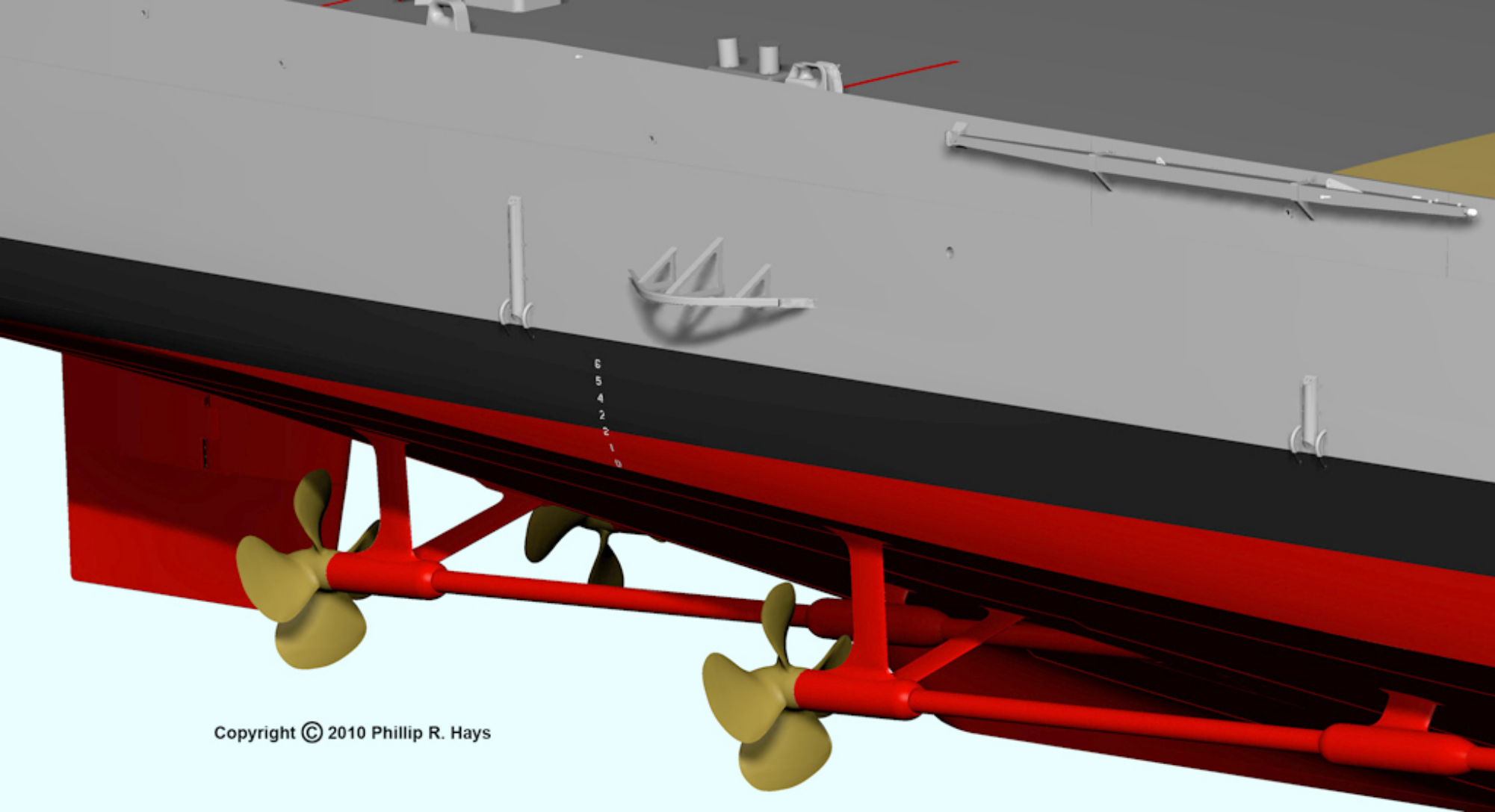

Copyright © 2010 Phillip R. Hays

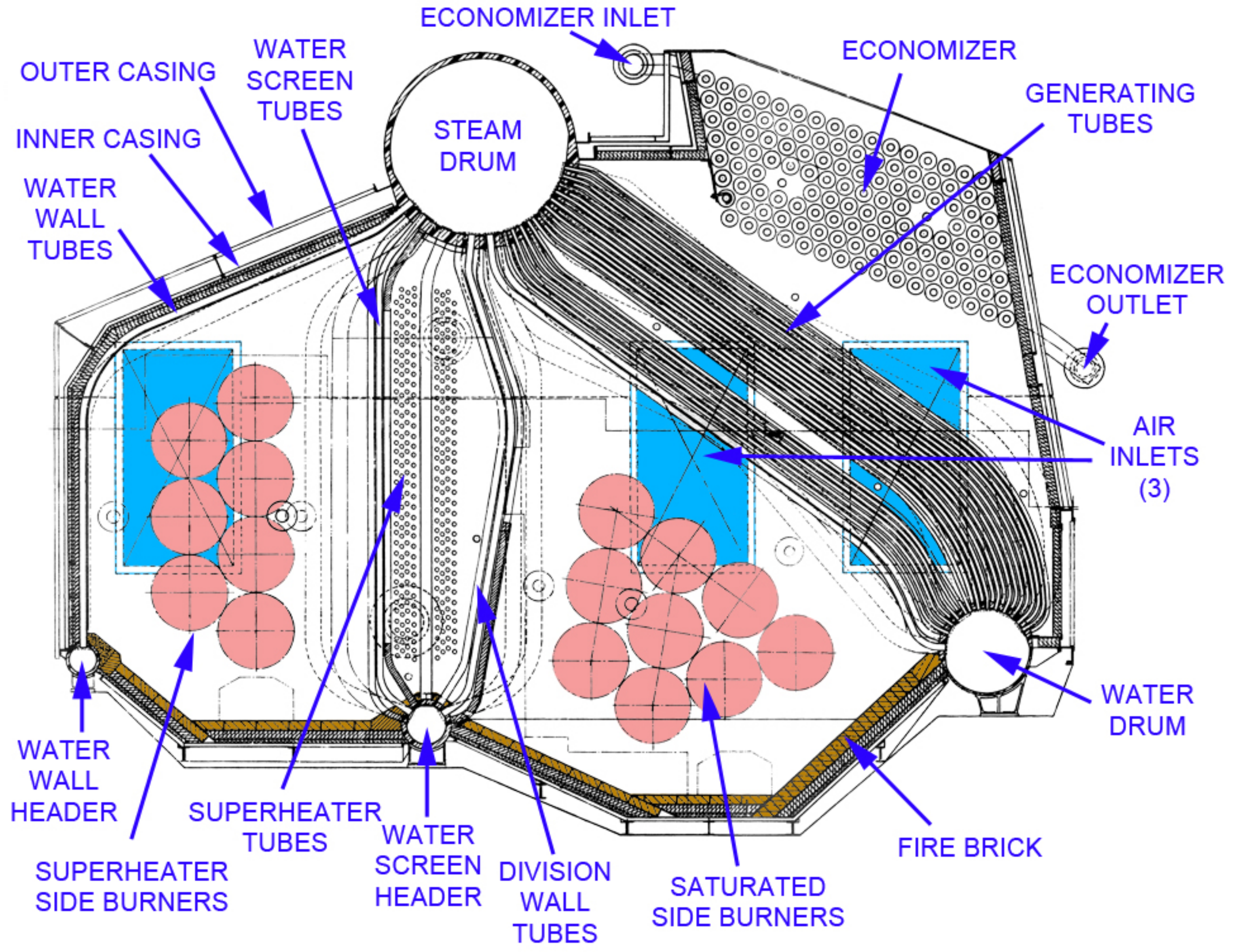

BABCOCK & WILCOX EXPRESS TYPE DOUBLE FURNACE BOILER (TYPE M)

Copyright © 2013 Phillip R. Hays

VENT CONDENSER

SPRAY VALVES

TO GLAND EXHAUST CONDENSER

CONDENSATE RECIRCULATING CONNECTION

CONDENSATE INLET

STEAM INLET

CONICAL BAFFLE

A

A

DEAERATING UNIT

AUTOMATIC CHECK VALVE

AUTOMATIC CHECK VALVE CONTROL

RECIRCULATING CONNECTION TO MAIN CONDENSER

FEED WATER OUTLET

LEGEND

CONDENSATE

STEAM

MIXTURE OF STEAM PLUS AIR AND OTHER NONCONDENSABLE GASES

WATER CONDENSED ON VENT CONDENSER

DEAERATED WATER

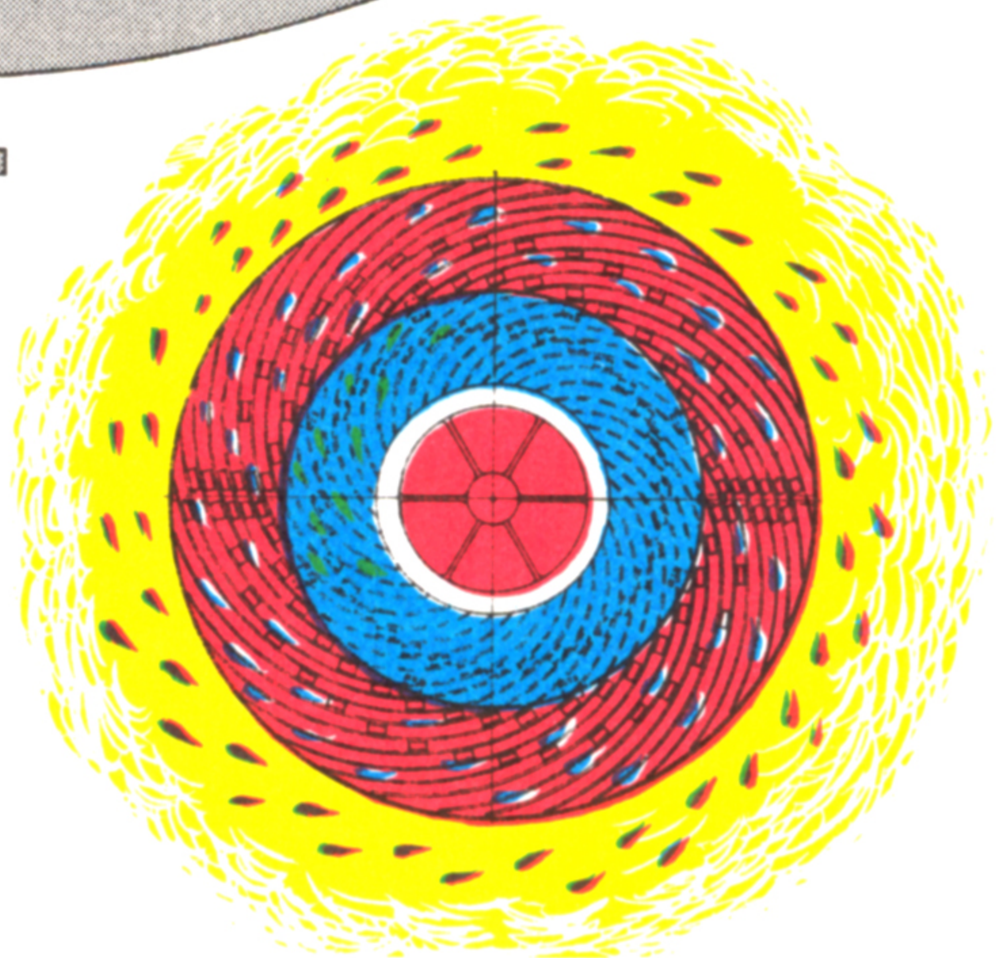

SECTION A–A THROUGH DEAERATING UNIT

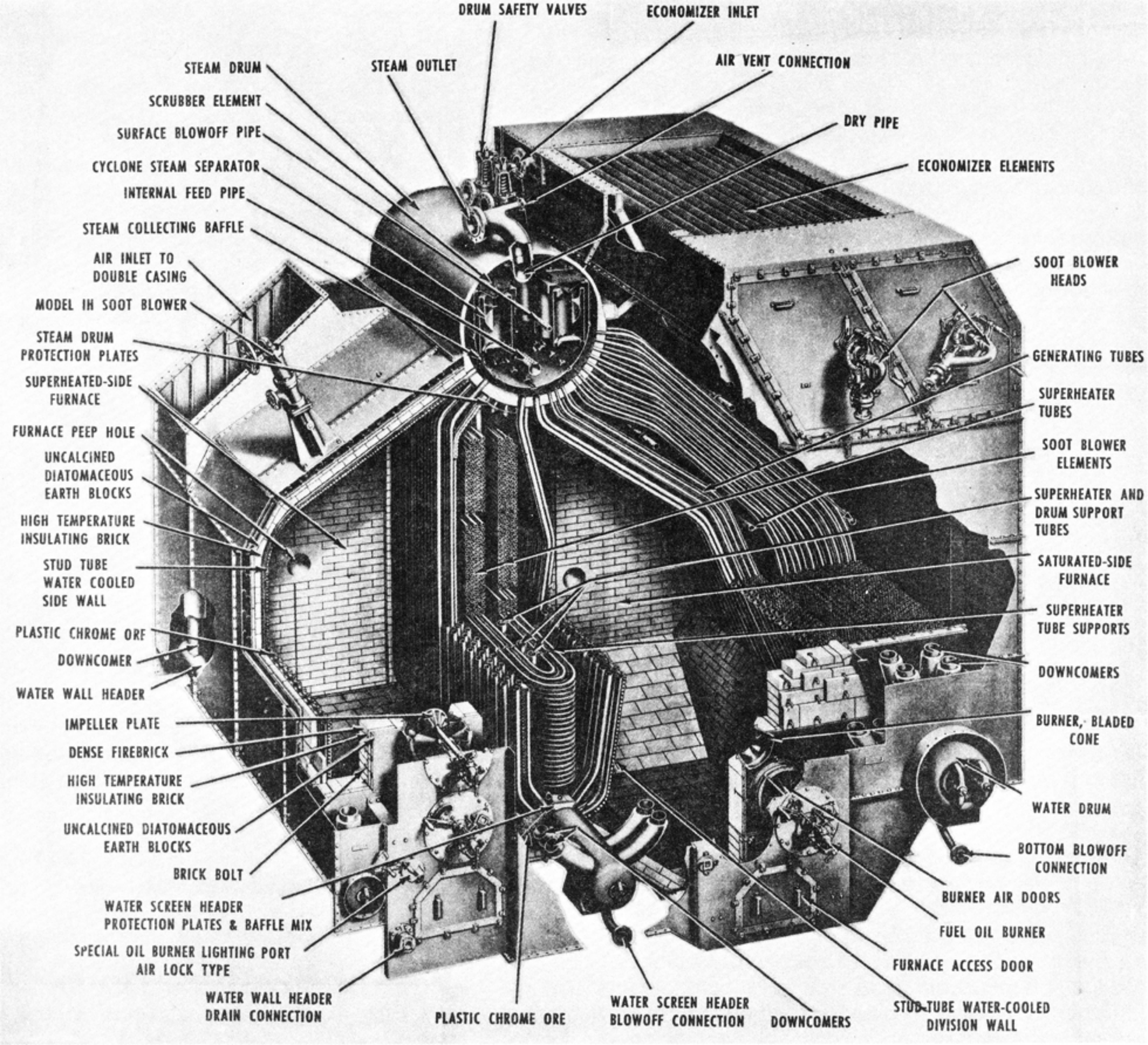
DRUM SAFETY VALVES
ECONOMIZER INLET
STEAM DRUM
STEAM OUTLET
AIR VENT CONNECTION
SCRUBBER ELEMENT
SURFACE BLOWOFF PIPE
DRY PIPE
CYCLONE STEAM SEPARATOR
ECONOMIZER ELEMENTS
INTERNAL FEED PIPE
STEAM COLLECTING BAFFLE
AIR INLET TO DOUBLE CASING
SOOT BLOWER HEADS
MODEL IH SOOT BLOWER
STEAM DRUM PROTECTION PLATES
GENERATING TUBES
SUPERHEATED-SIDE FURNACE
SUPERHEATER TUBES
FURNACE PEEP HOLE
SOOT BLOWER ELEMENTS
UNCALCINED DIATOMACEOUS EARTH BLOCKS
SUPERHEATER AND DRUM SUPPORT TUBES
HIGH TEMPERATURE INSULATING BRICK
SATURATED-SIDE FURNACE
STUD TUBE WATER COOLED SIDE WALL
SUPERHEATER TUBE SUPPORTS
PLASTIC CHROME ORE
DOWNCOMERS
DOWNCOMER
WATER WALL HEADER
BURNER, BLADED CONE
IMPELLER PLATE
DENSE FIREBRICK
WATER DRUM
HIGH TEMPERATURE INSULATING BRICK
BOTTOM BLOWOFF CONNECTION
UNCALCINED DIATOMACEOUS EARTH BLOCKS
BRICK BOLT
BURNER AIR DOORS
WATER SCREEN HEADER PROTECTION PLATES & BAFFLE MIX
FUEL OIL BURNER
SPECIAL OIL BURNER LIGHTING PORT AIR LOCK TYPE
FURNACE ACCESS DOOR
WATER WALL HEADER DRAIN CONNECTION
PLASTIC CHROME ORE
WATER SCREEN HEADER BLOWOFF CONNECTION
DOWNCOMERS
STUD-TUBE WATER-COOLED DIVISION WALL

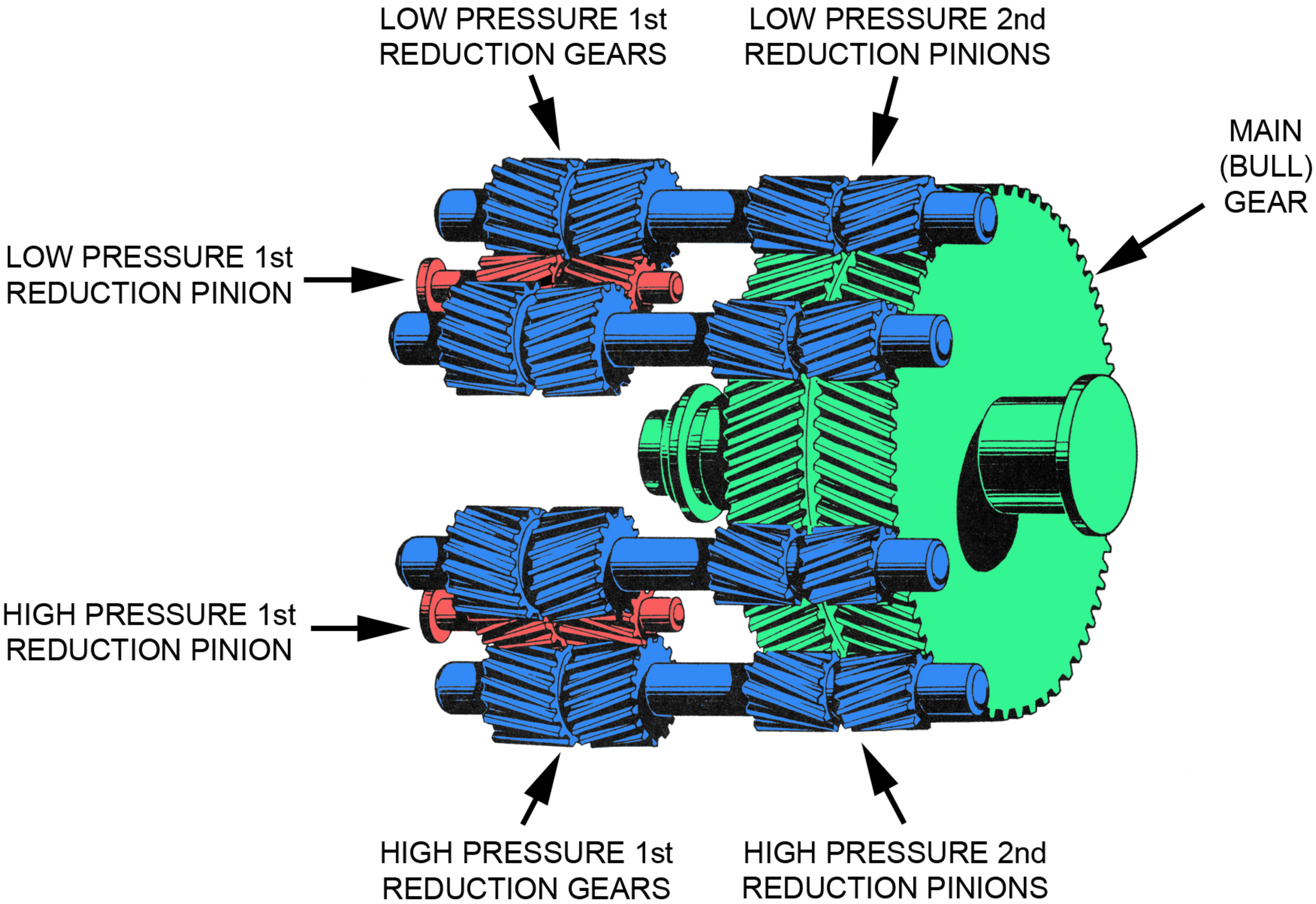
LOW PRESSURE 1st
REDUCTION GEARS
LOW PRESSURE 2nd
REDUCTION PINIONS
MAIN
(BULL)
GEAR
LOW PRESSURE 1st
REDUCTION PINION
HIGH PRESSURE 1st
REDUCTION PINION
HIGH PRESSURE 1st
REDUCTION GEARS
HIGH PRESSURE 2nd
REDUCTION PINIONS

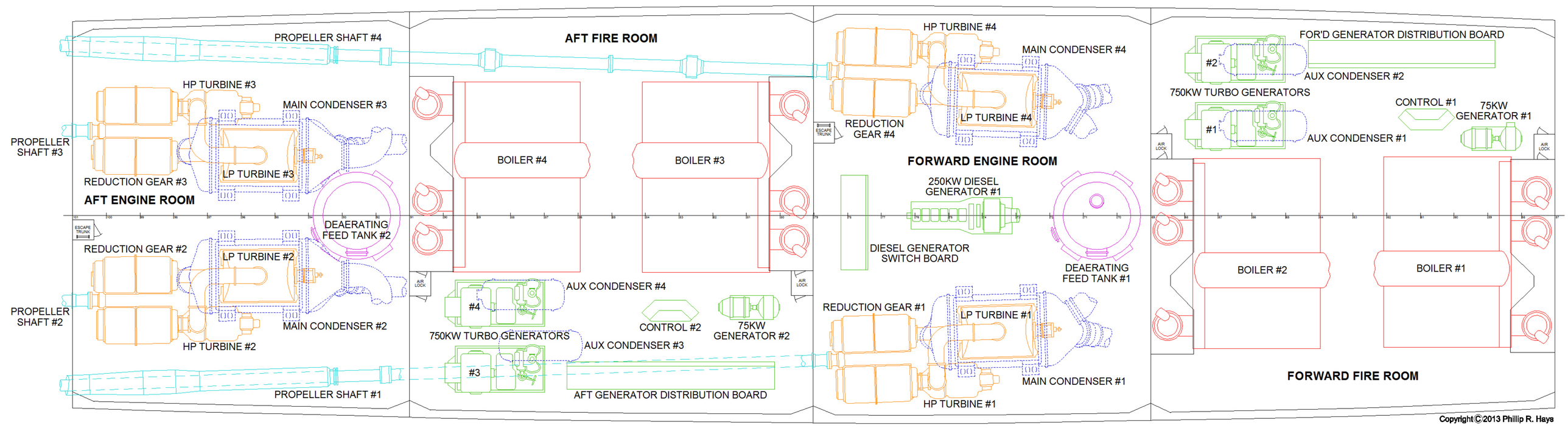

Copyright©2013 Phillip R. Hays

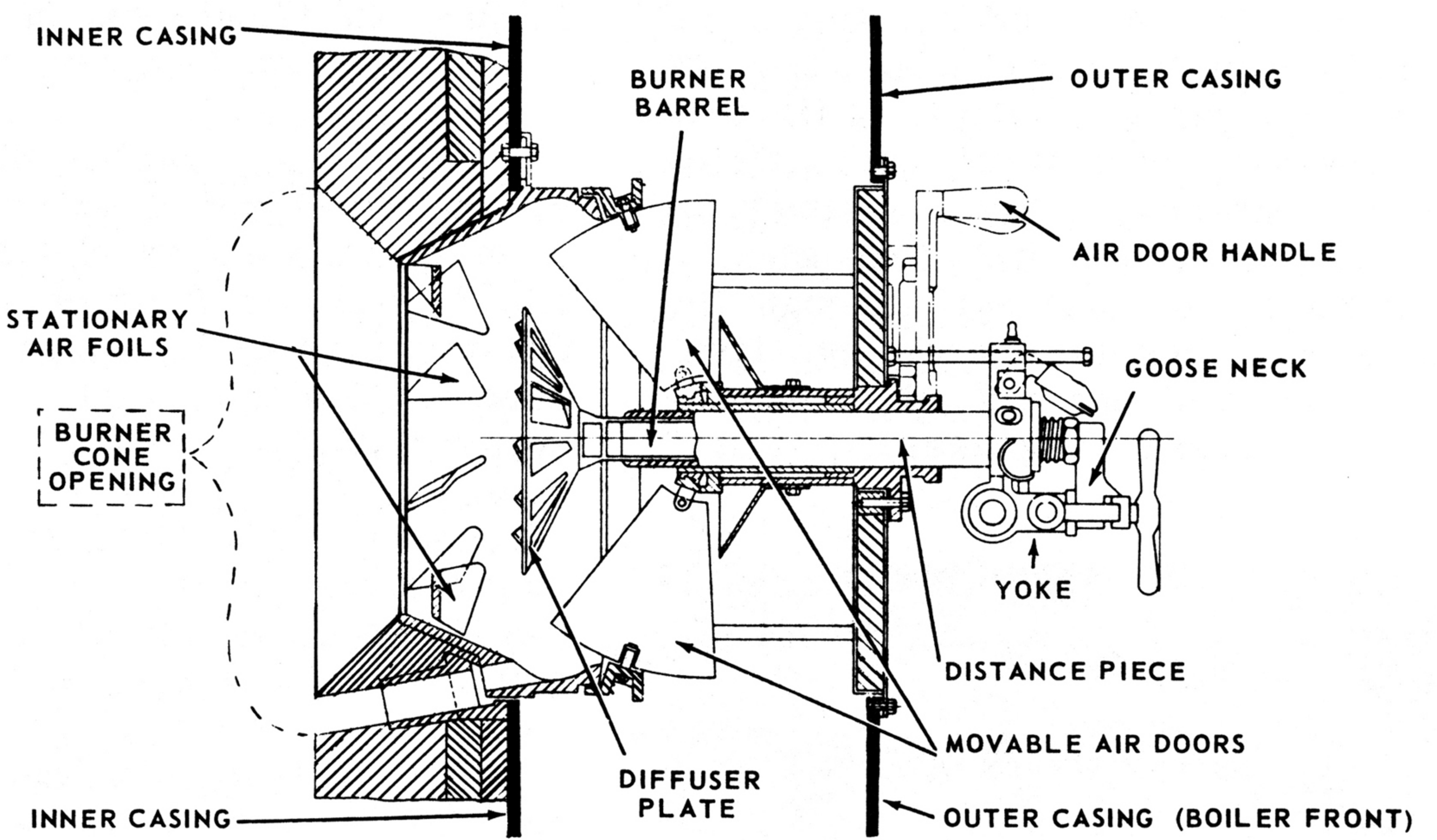
INNER CASING
BURNER BARREL
OUTER CASING
AIR DOOR HANDLE
STATIONARY AIR FOILS
GOOSE NECK
BURNER CONE OPENING
YOKE
DISTANCE PIECE
MOVABLE AIR DOORS
DIFFUSER PLATE
INNER CASING
OUTER CASING (BOILER FRONT)

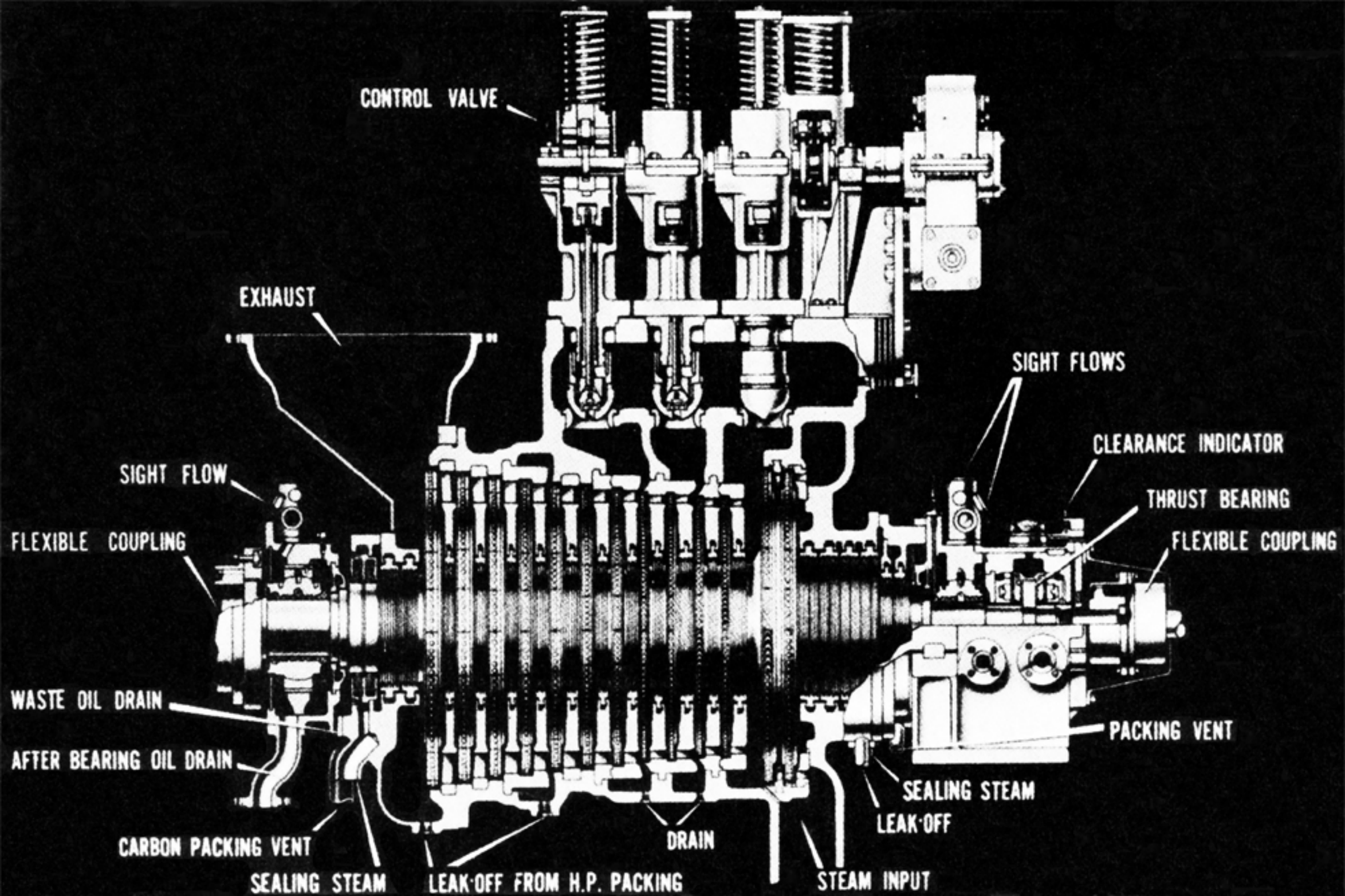
CONTROL VALVE
EXHAUST
SIGHT FLOWS
CLEARANCE INDICATOR
SIGHT FLOW
THRUST BEARING
FLEXIBLE COUPLING
FLEXIBLE COUPLING
WASTE OIL DRAIN
PACKING VENT
AFTER BEARING OIL DRAIN
SEALING STEAM
LEAK-OFF
CARBON PACKING VENT
DRAIN
SEALING STEAM
LEAK-OFF FROM H.P. PACKING
STEAM INPUT

LOW TEMPERATURE
LOW PRESSURE
LOW VELOCITY

LOWER TEMPERATURE
HIGH PRESSURE
HIGH VELOCITY

HIGH TEMPERATURE
HIGH PRESSURE
LOW VELOCITY

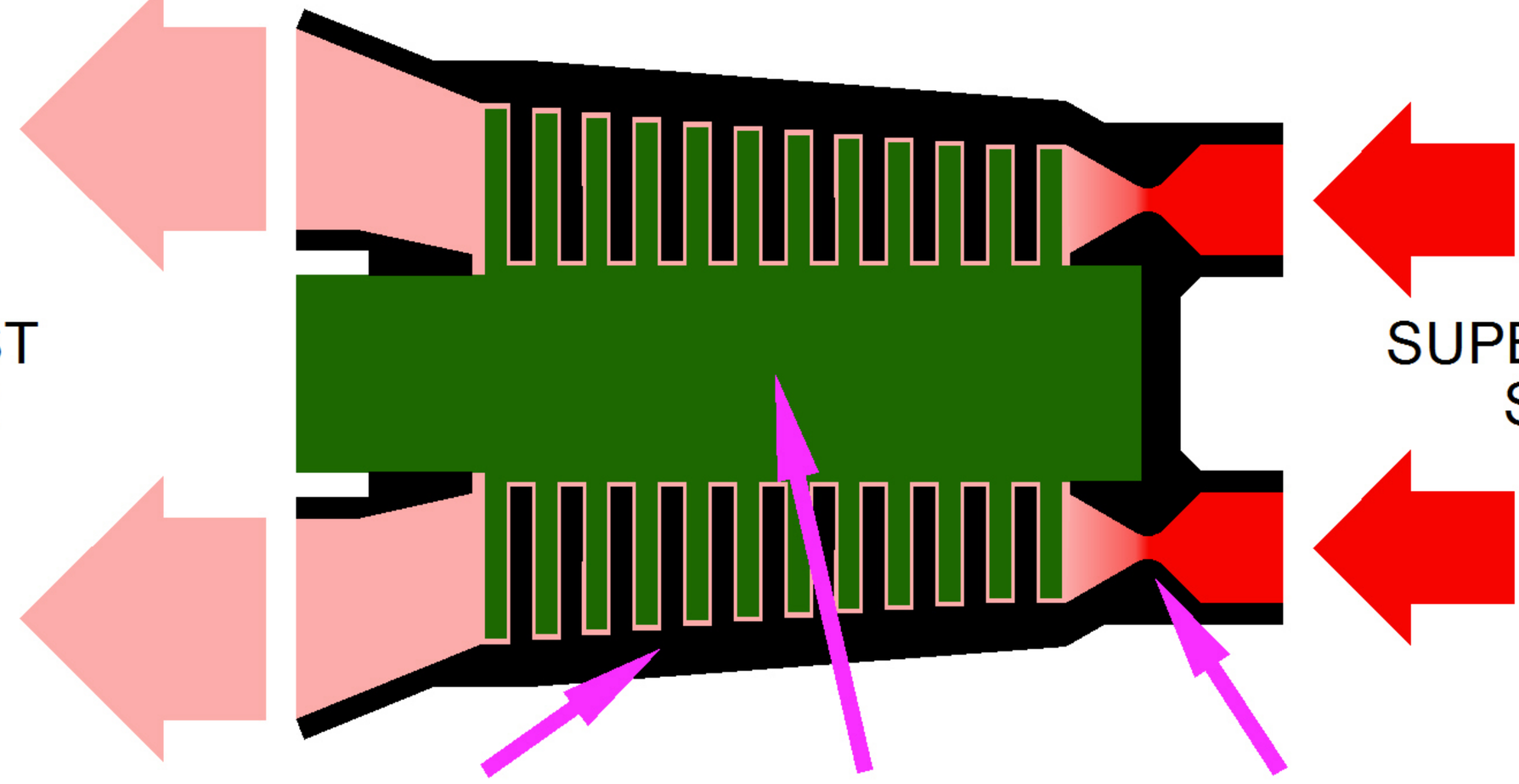

EXHAUST
STEAM

SUPERHEATED
STEAM

FIXED
BLADES

ROTATING
BLADES

NOZZLES

HIGH PRESSURE TURBINE

Copyright ©2013 Phillip R. Hays

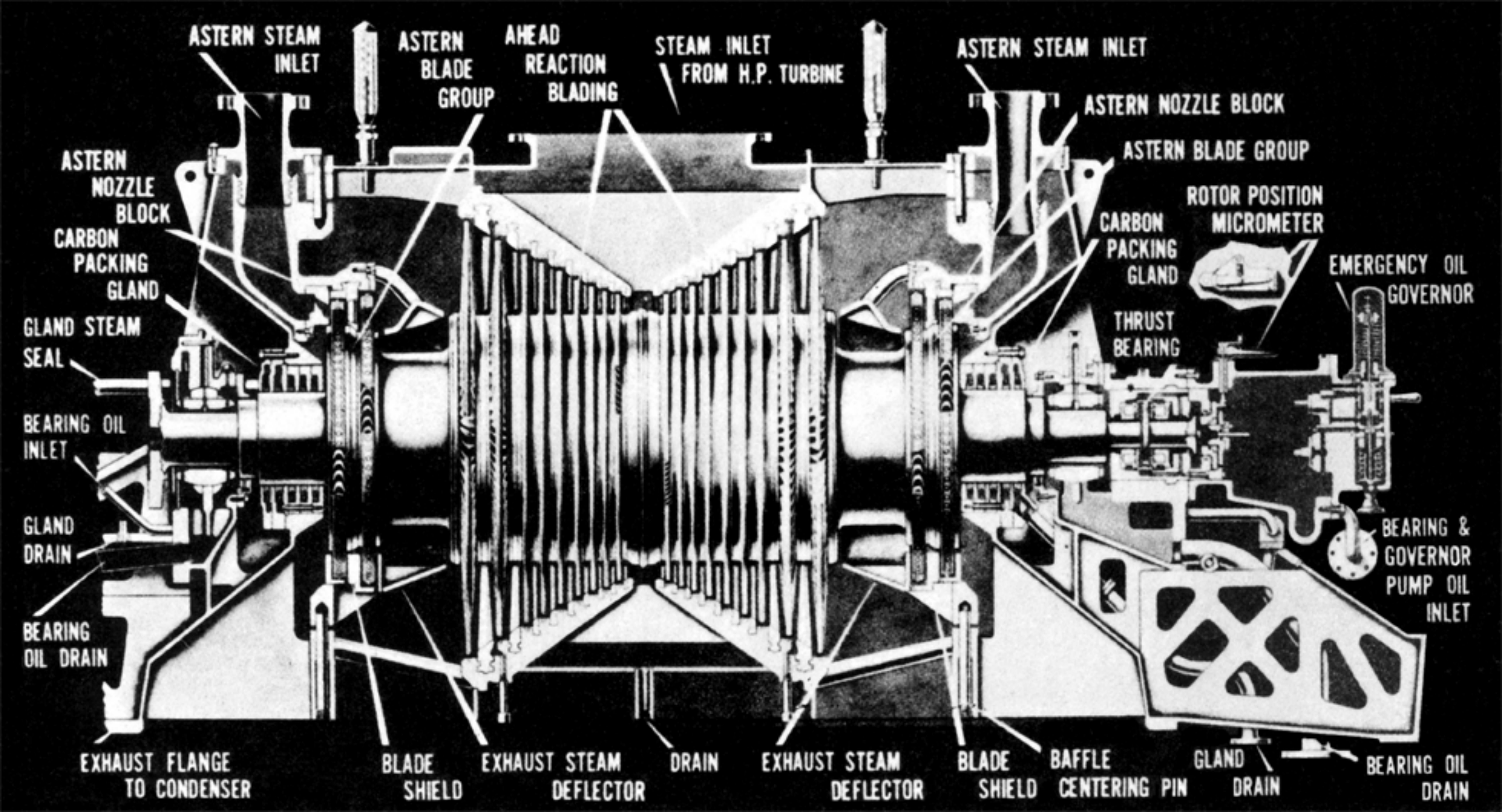
ASTERN STEAM INLET
ASTERN BLADE GROUP
AHEAD REACTION BLADING
STEAM INLET FROM H.P. TURBINE
ASTERN STEAM INLET
ASTERN NOZZLE BLOCK
ASTERN BLADE GROUP
ASTERN NOZZLE BLOCK
CARBON PACKING GLAND
GLAND STEAM SEAL
BEARING OIL INLET
GLAND DRAIN
BEARING OIL DRAIN
ROTOR POSITION MICROMETER
CARBON PACKING GLAND
EMERGENCY OIL GOVERNOR
THRUST BEARING
BEARING & GOVERNOR PUMP OIL INLET
EXHAUST FLANGE TO CONDENSER
BLADE SHIELD
EXHAUST STEAM DEFLECTOR
DRAIN
EXHAUST STEAM DEFLECTOR
BLADE SHIELD
BAFFLE CENTERING PIN
GLAND DRAIN
BEARING OIL DRAIN

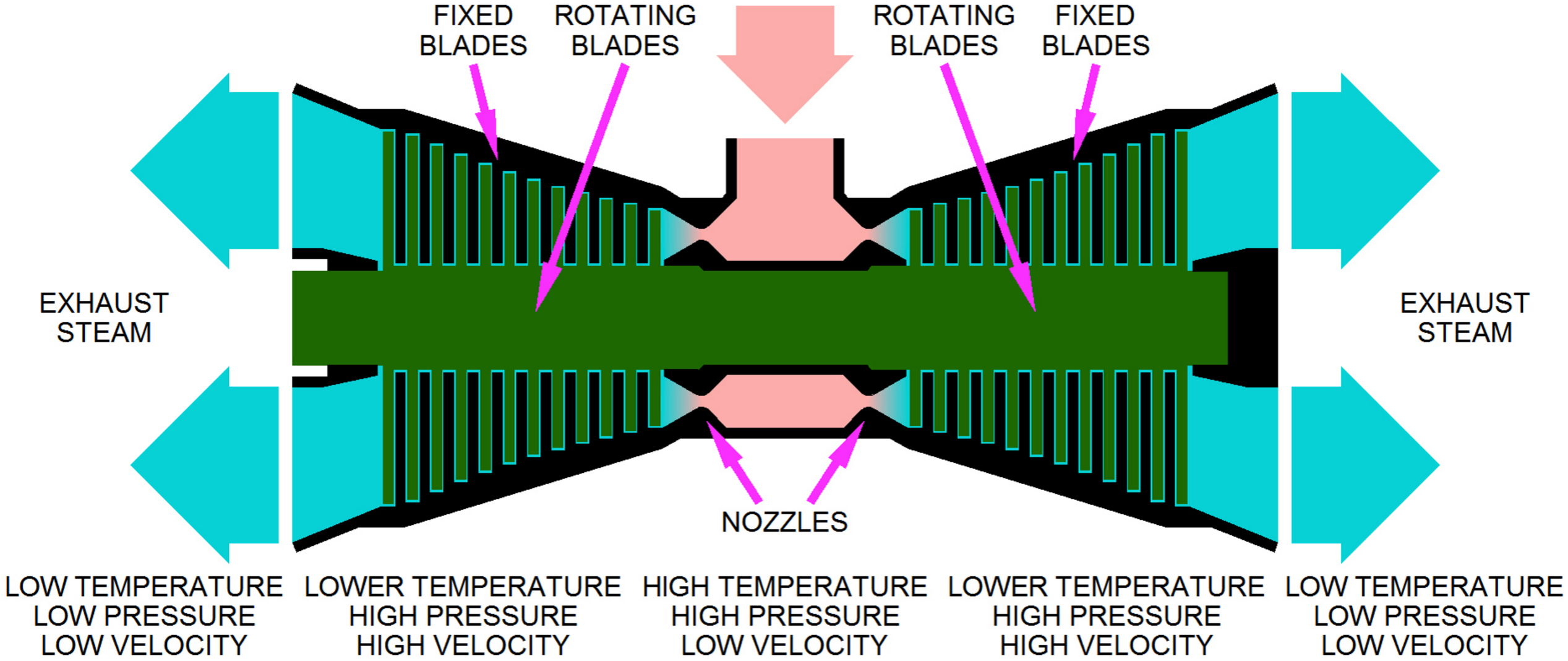

LOW PRESSURE TURBINE

Copyright © 2013 Phillip R. Hays

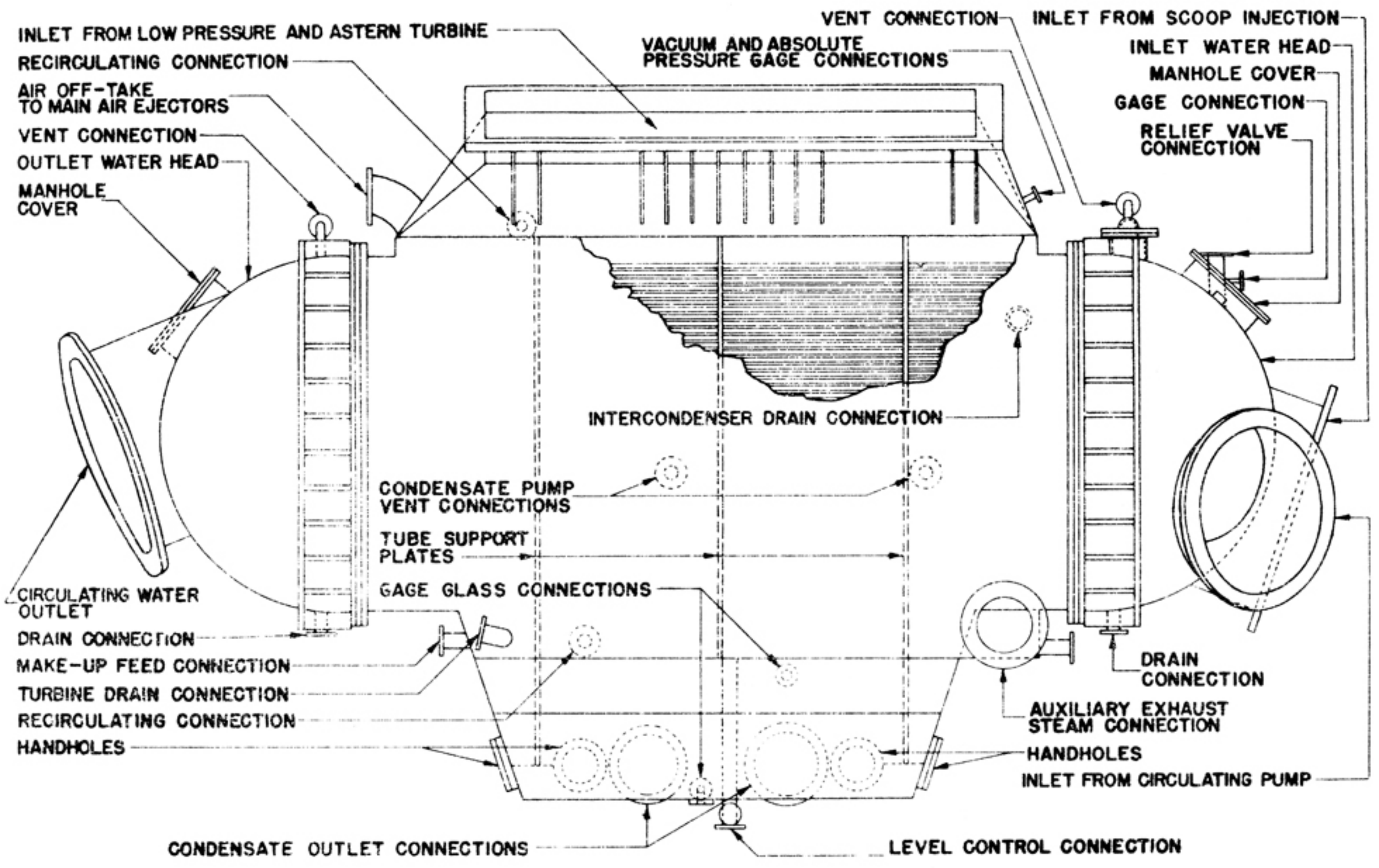
INLET FROM LOW PRESSURE AND ASTERN TURBINE
RECIRCULATING CONNECTION
AIR OFF-TAKE TO MAIN AIR EJECTORS
VENT CONNECTION
OUTLET WATER HEAD
MANHOLE COVER
VACUUM AND ABSOLUTE PRESSURE GAGE CONNECTIONS
VENT CONNECTION
INLET FROM SCOOP INJECTION
INLET WATER HEAD
MANHOLE COVER
GAGE CONNECTION
RELIEF VALVE CONNECTION
INTERCONDENSER DRAIN CONNECTION
CONDENSATE PUMP VENT CONNECTIONS
TUBE SUPPORT PLATES
GAGE GLASS CONNECTIONS
CIRCULATING WATER OUTLET
DRAIN CONNECTION
MAKE-UP FEED CONNECTION
TURBINE DRAIN CONNECTION
RECIRCULATING CONNECTION
HANDHOLES
DRAIN CONNECTION
AUXILIARY EXHAUST STEAM CONNECTION
HANDHOLES
INLET FROM CIRCULATING PUMP
CONDENSATE OUTLET CONNECTIONS
LEVEL CONTROL CONNECTION

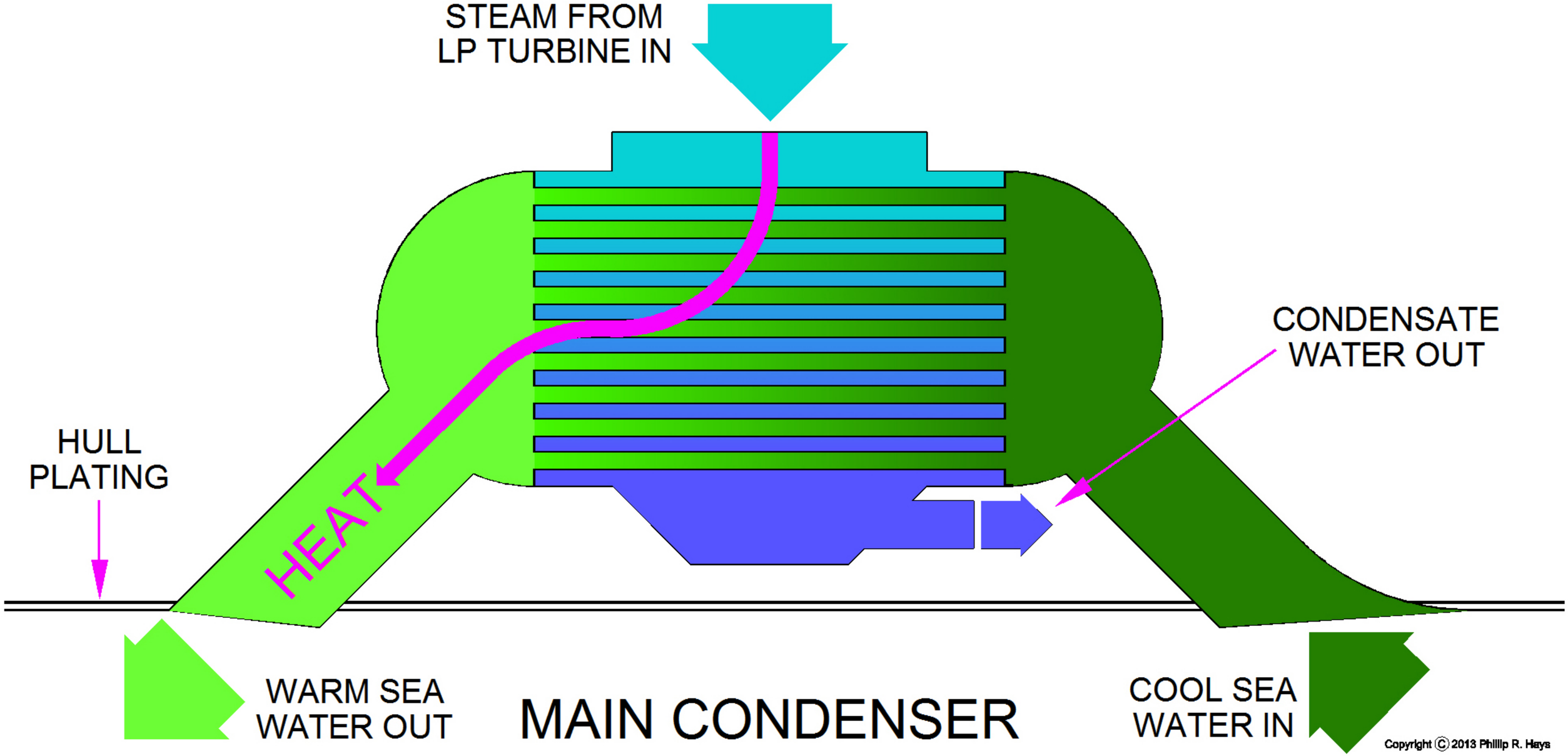

Copyright © 2013 Phillip R. Hays

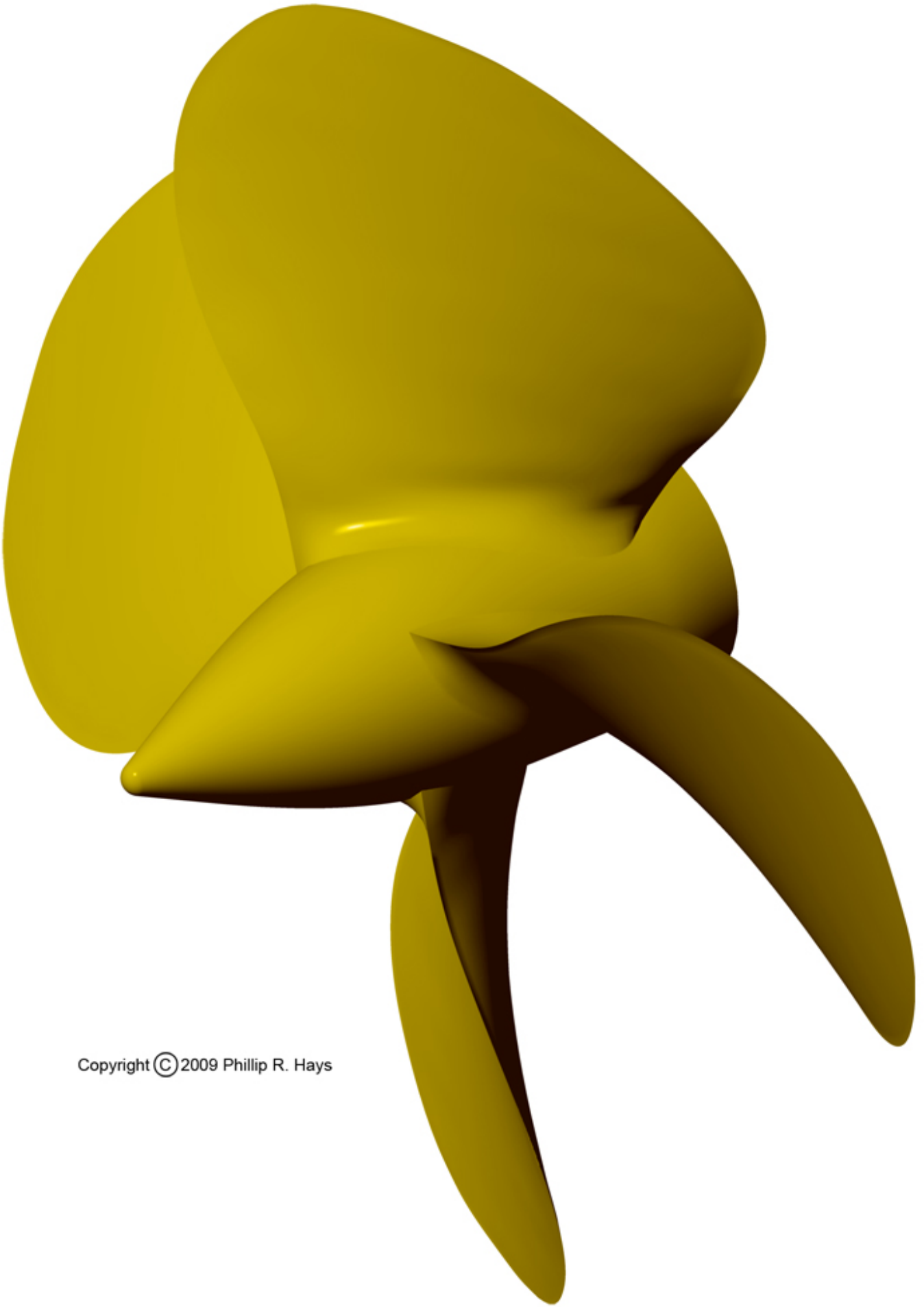

Copyright © 2009 Phillip R. Hays

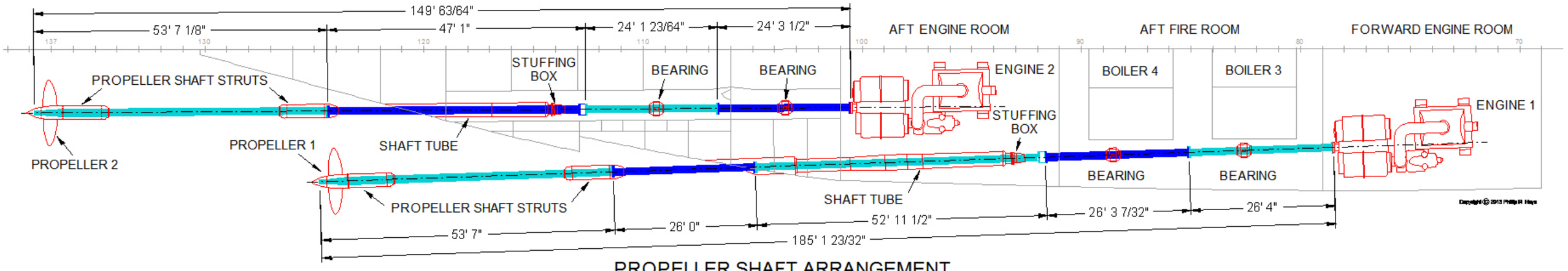

PROPELLER SHAFT ARRANGEMENT

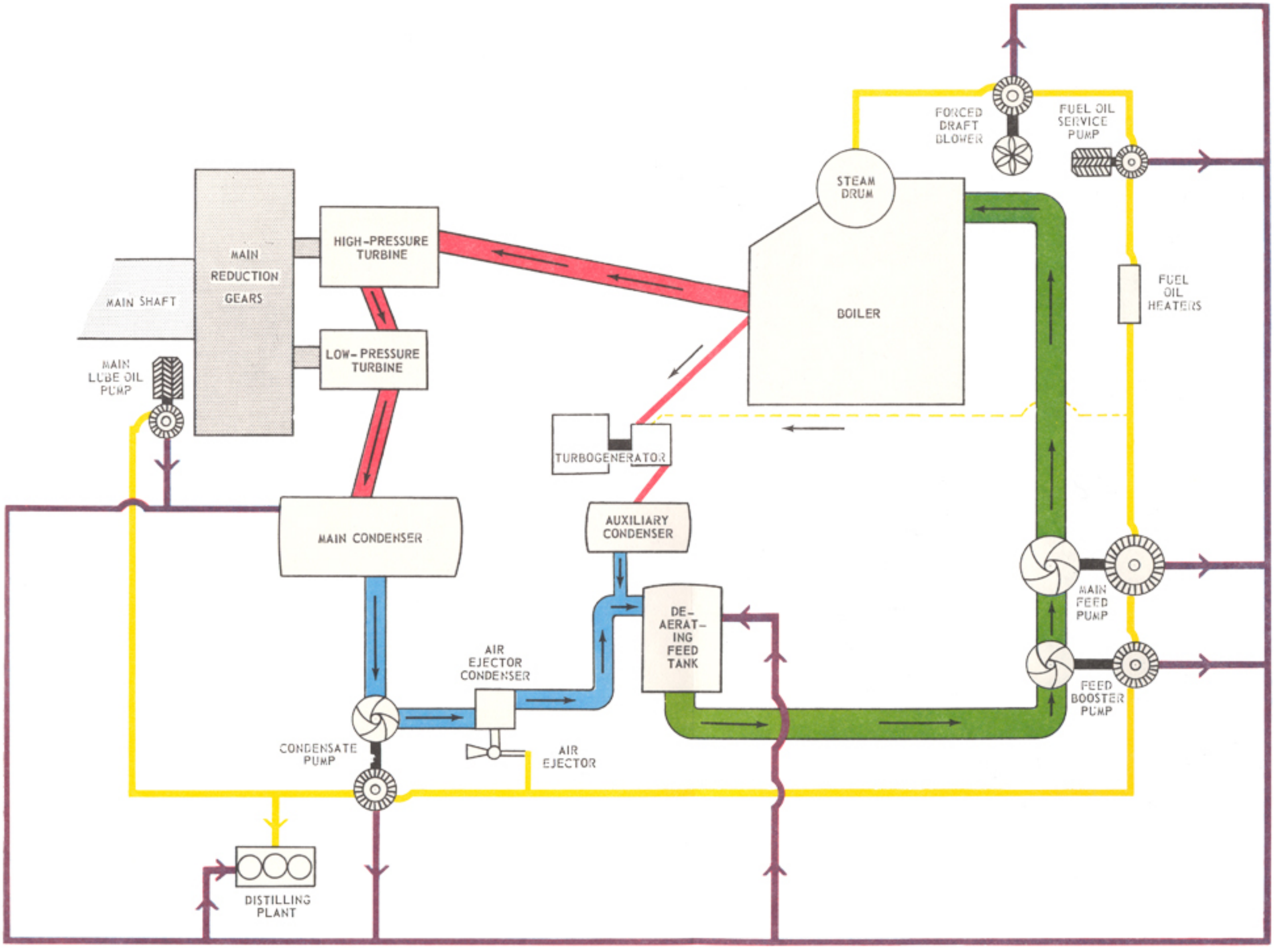

AUXILIARY TURBINE

CENTRIFUGAL PUMP

SCREW-TYPE ROTARY PUMP

FORCED DRAFT BLOWER FAN

MAIN STEAM (SUPERHEATED)

TURBOGENERATOR STEAM (SUPERHEATED)

CONDENSATE

FEED WATER

AUXILIARY STEAM (SATURATED)

TURBOGENERATOR STEAM (SATURATED)

AUXILIARY EXHAUST STEAM

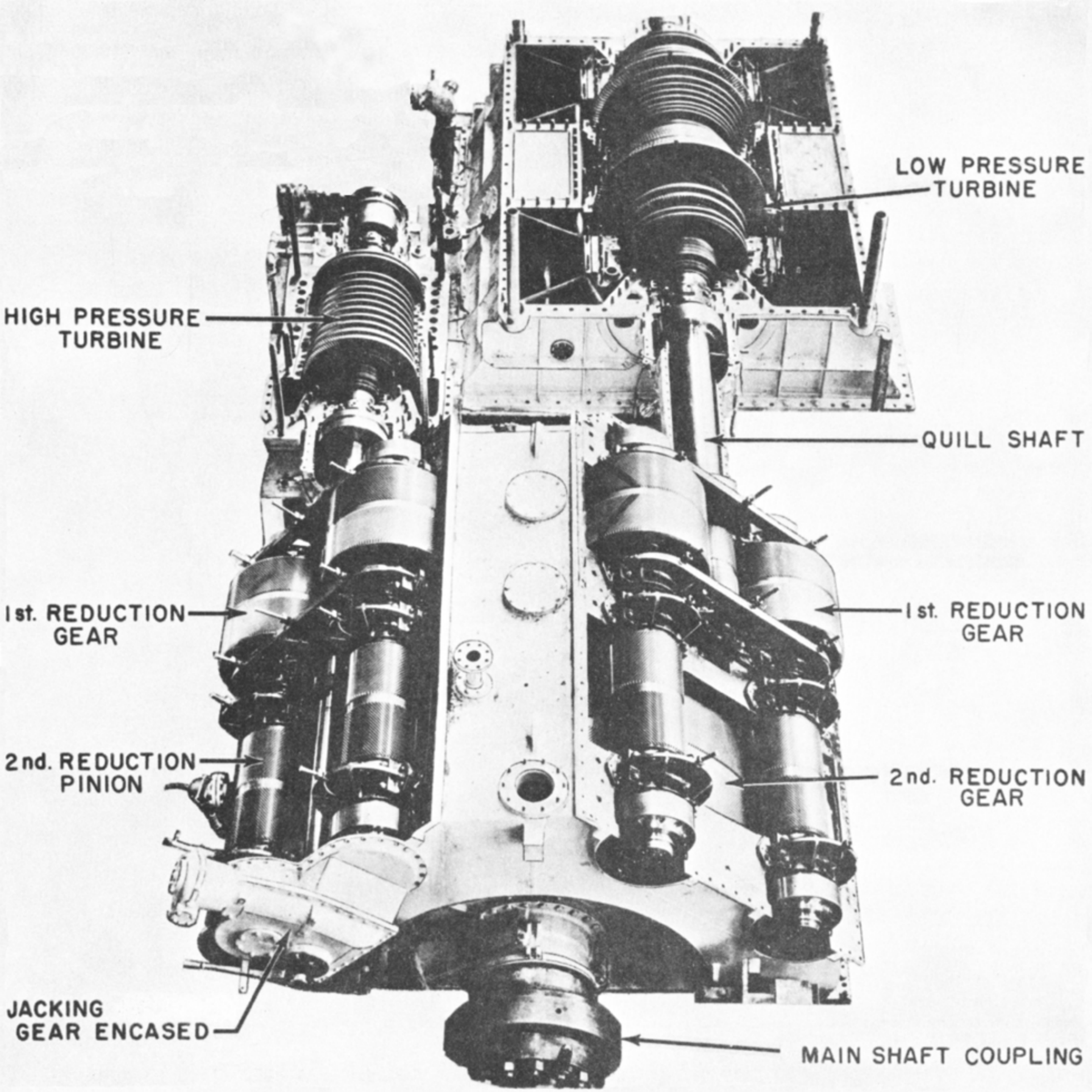
HIGH PRESSURE TURBINE
LOW PRESSURE TURBINE
QUILL SHAFT
1st. REDUCTION GEAR
1st. REDUCTION GEAR
2nd. REDUCTION PINION
2nd. REDUCTION GEAR
JACKING GEAR ENCASED
MAIN SHAFT COUPLING

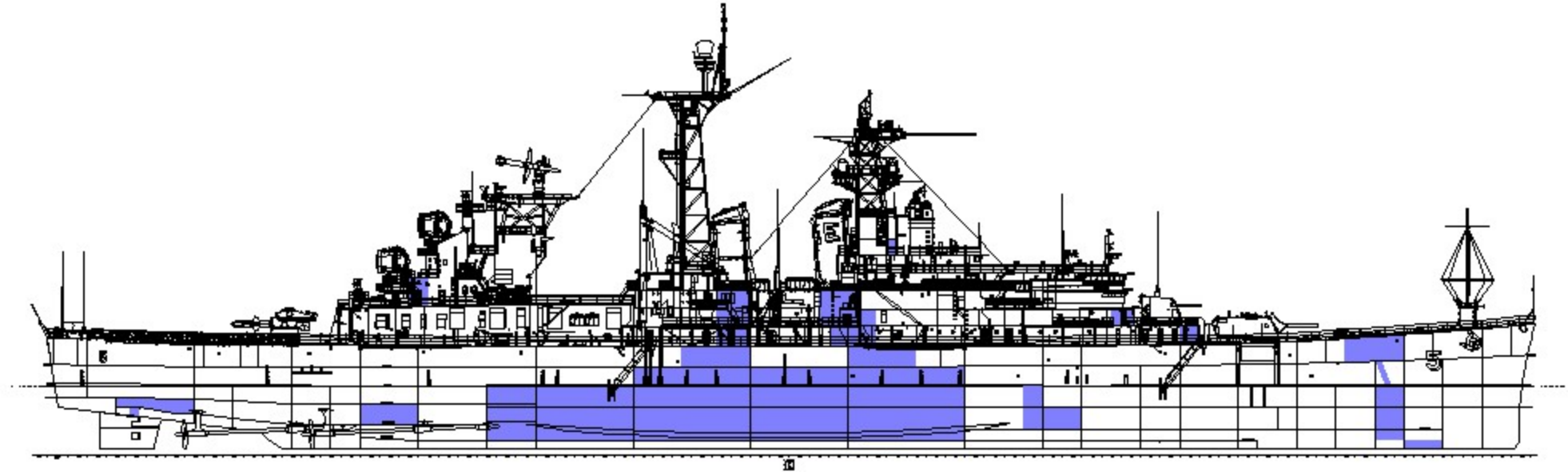

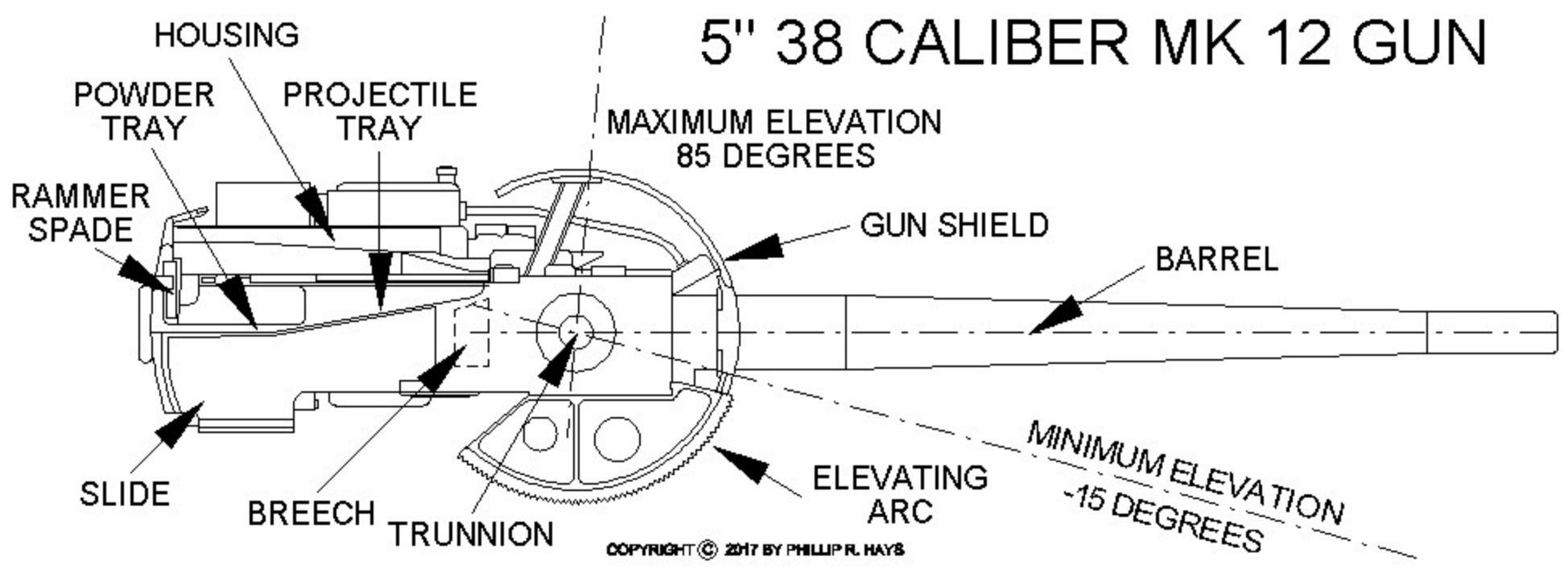
5" 38 CALIBER MK 12 GUN
HOUSING
POWDER TRAY
PROJECTILE TRAY
MAXIMUM ELEVATION 85 DEGREES
RAMMER SPADE
GUN SHIELD
BARREL
SLIDE
BREECH
TRUNNION
ELEVATING ARC
MINIMUM ELEVATION -15 DEGREES
COPYRIGHT © 2017 BY PHILLIP R. HAYS

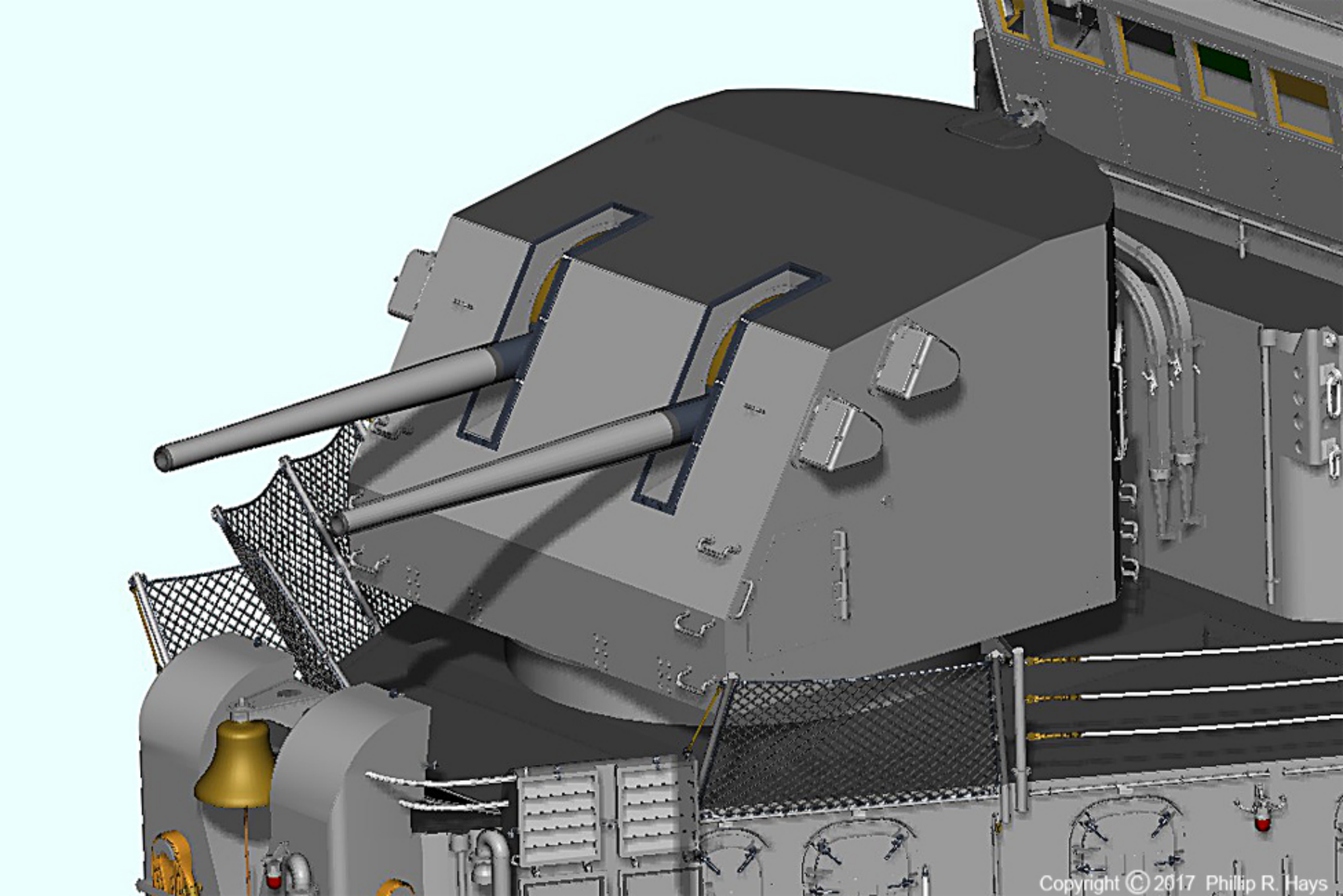
Copyright © 2017 Phillip R. Hays

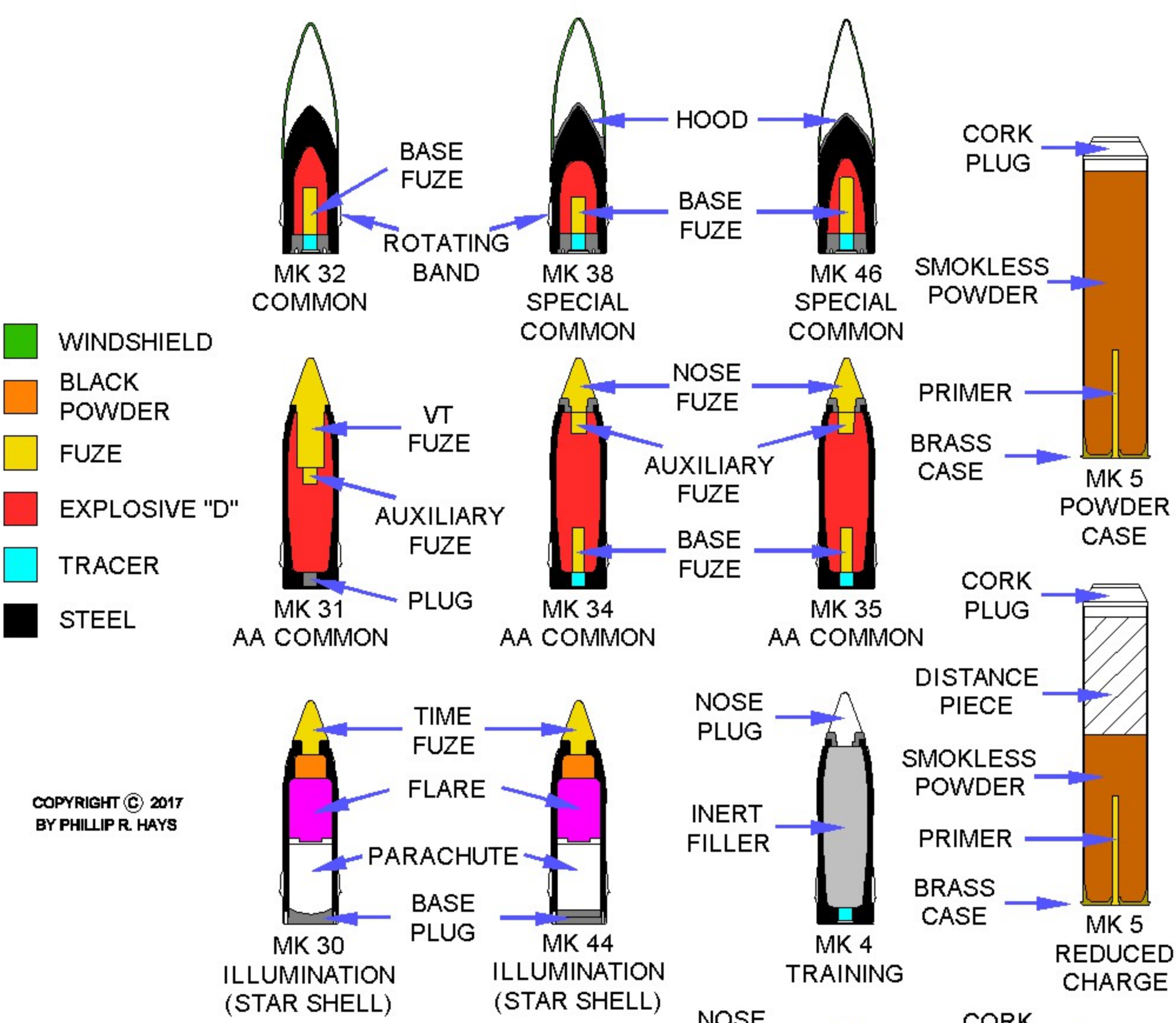

COPYRIGHT © 2017
BY PHILLIP R. HAYS

5"/38 TWIN GUN MOUNT PLAN VIEW

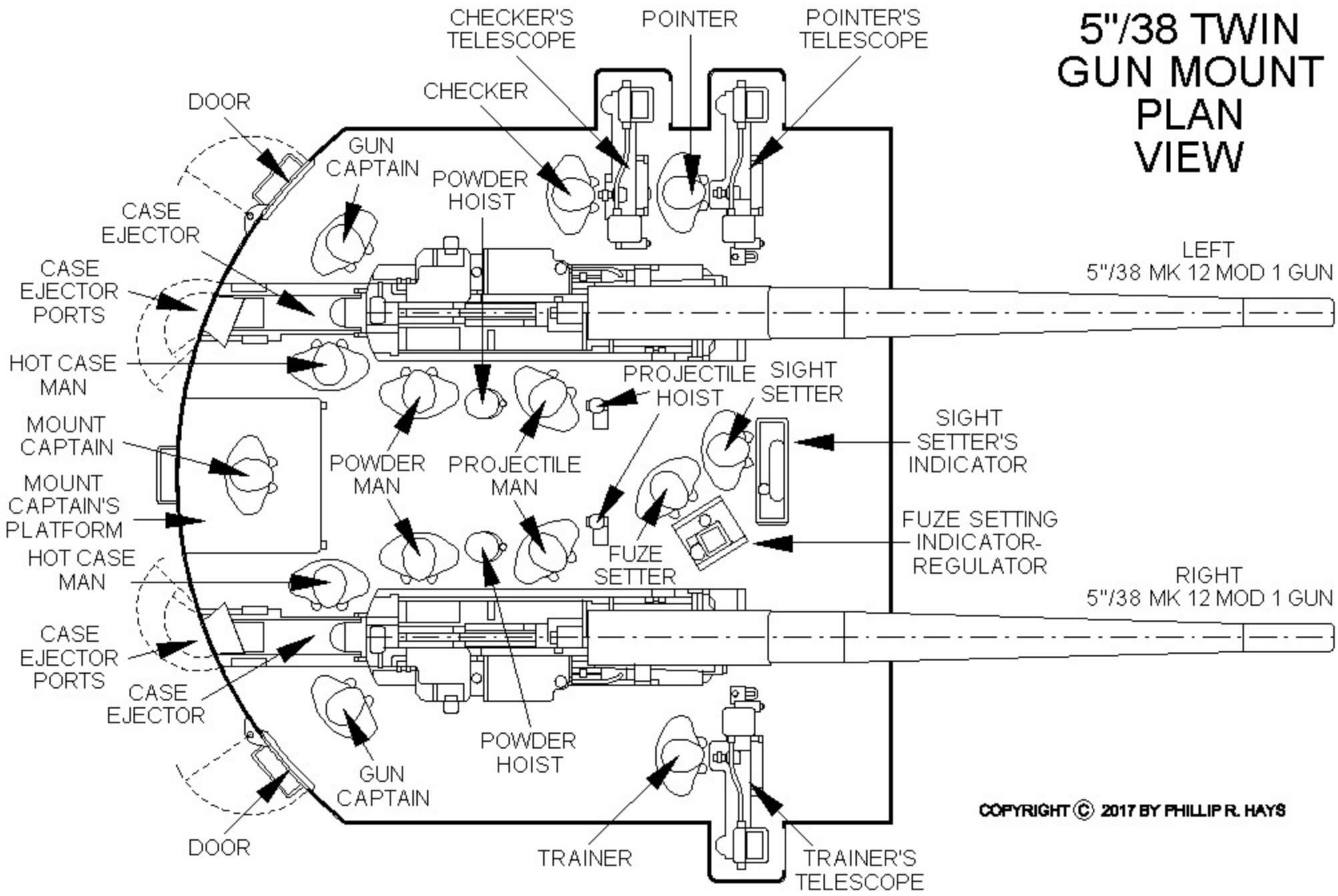

COPYRIGHT © 2017 BY PHILLIP R. HAYS

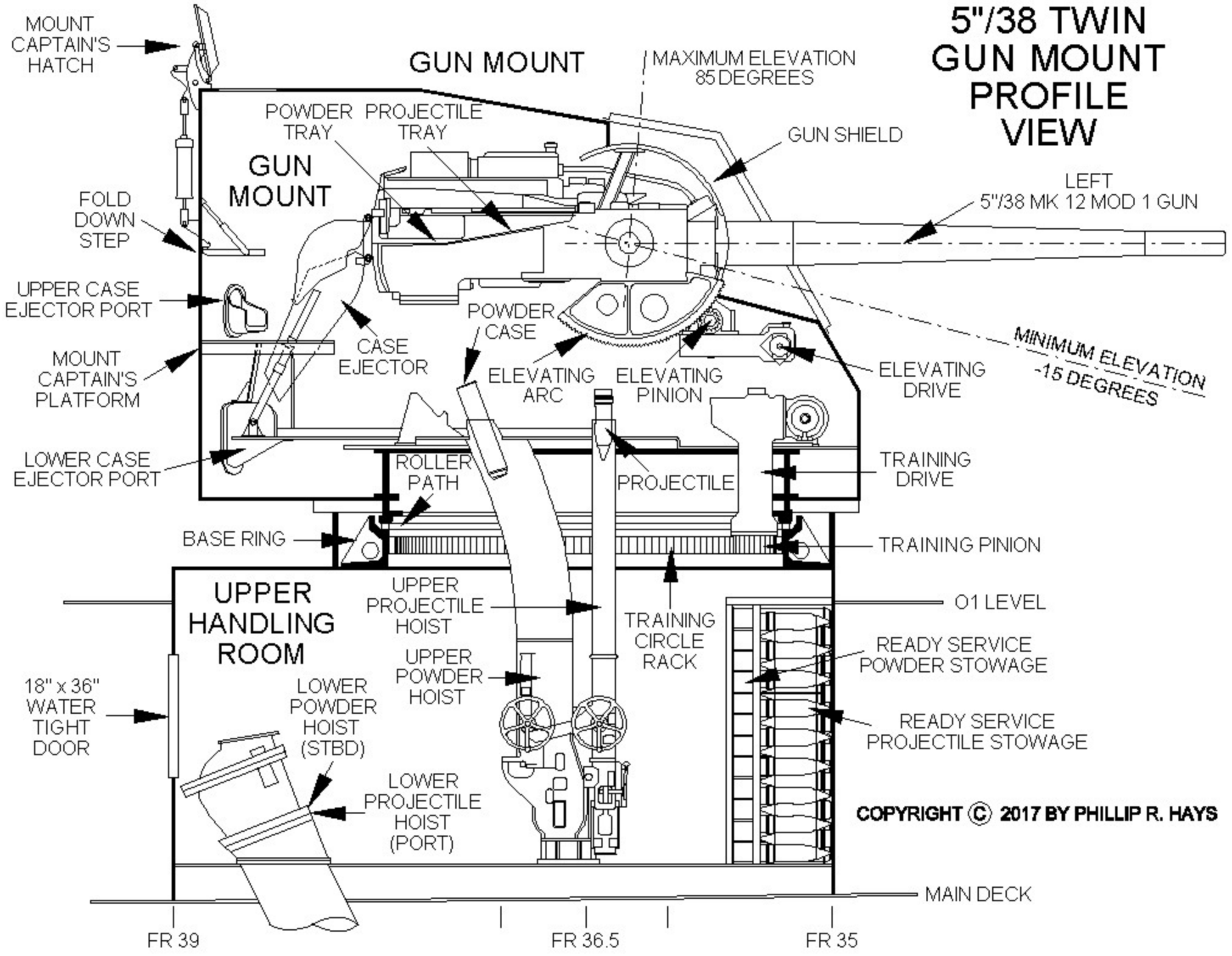
5"/38 TWIN GUN MOUNT PROFILE VIEW
GUN MOUNT
MAXIMUM ELEVATION 85 DEGREES
MOUNT CAPTAIN'S HATCH
POWDER TRAY
PROJECTILE TRAY
GUN SHIELD
GUN MOUNT
LEFT 5"/38 MK 12 MOD 1 GUN
FOLD DOWN STEP
UPPER CASE EJECTOR PORT
POWDER CASE
MINIMUM ELEVATION -15 DEGREES
MOUNT CAPTAIN'S PLATFORM
CASE EJECTOR
ELEVATING ARC
ELEVATING PINION
ELEVATING DRIVE
LOWER CASE EJECTOR PORT
ROLLER PATH
PROJECTILE
TRAINING DRIVE
BASE RING
TRAINING PINION
UPPER HANDLING ROOM
UPPER PROJECTILE HOIST
01 LEVEL
TRAINING CIRCLE RACK
READY SERVICE POWDER STOWAGE
UPPER POWDER HOIST
18" x 36" WATER TIGHT DOOR
LOWER POWDER HOIST (STBD)
READY SERVICE PROJECTILE STOWAGE
LOWER PROJECTILE HOIST (PORT)
COPYRIGHT © 2017 BY PHILLIP R. HAYS
MAIN DECK
FR 39
FR 36.5
FR 35

COPYRIGHT © 2017 BY PHILLIP R. HAYS

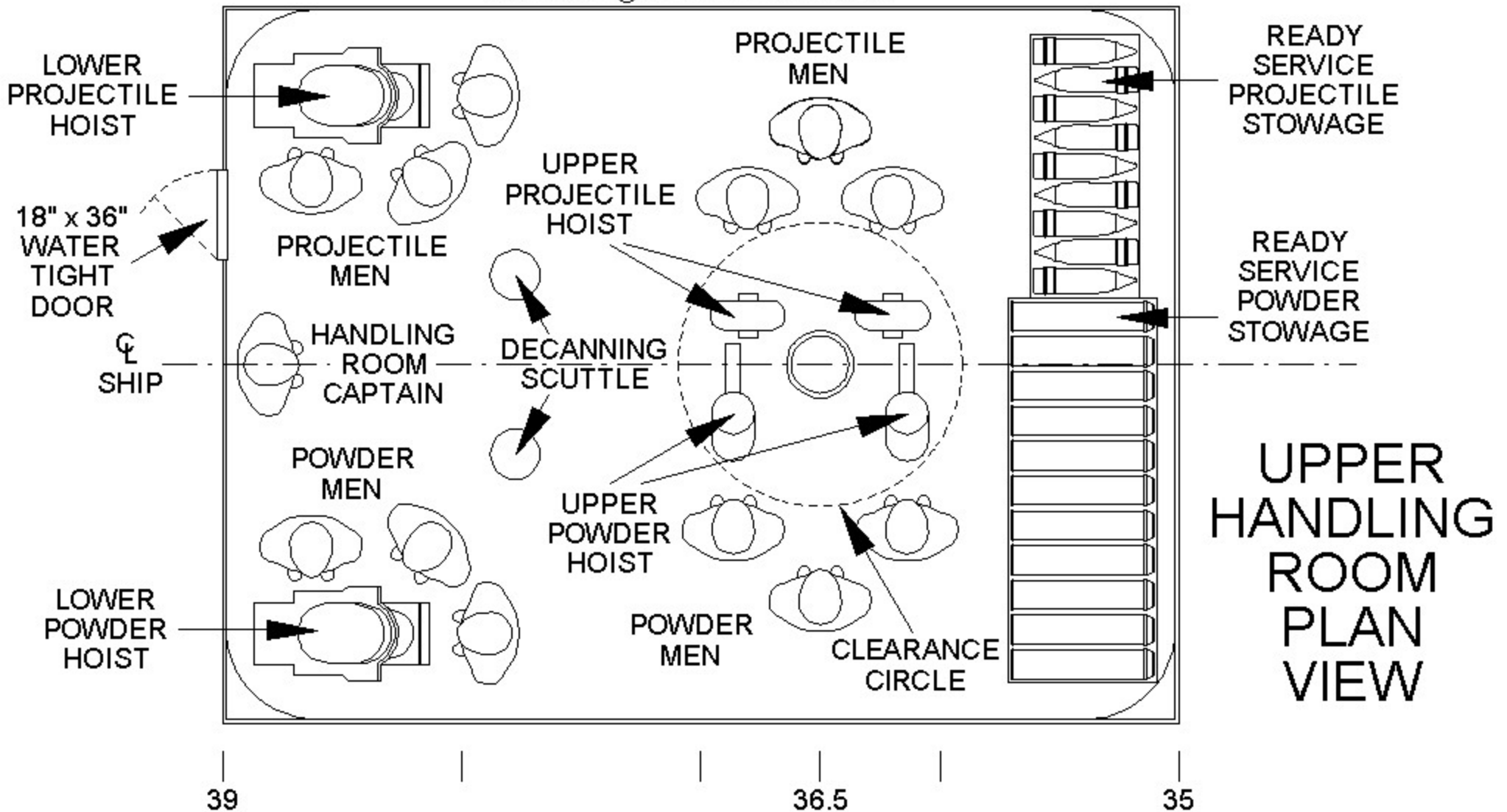

UPPER HANDLING ROOM PLAN VIEW

6"/47 AMMUNITION

WINDSHIELD

FUZE

EXPLOSIVE "D"

TRACER

STEEL

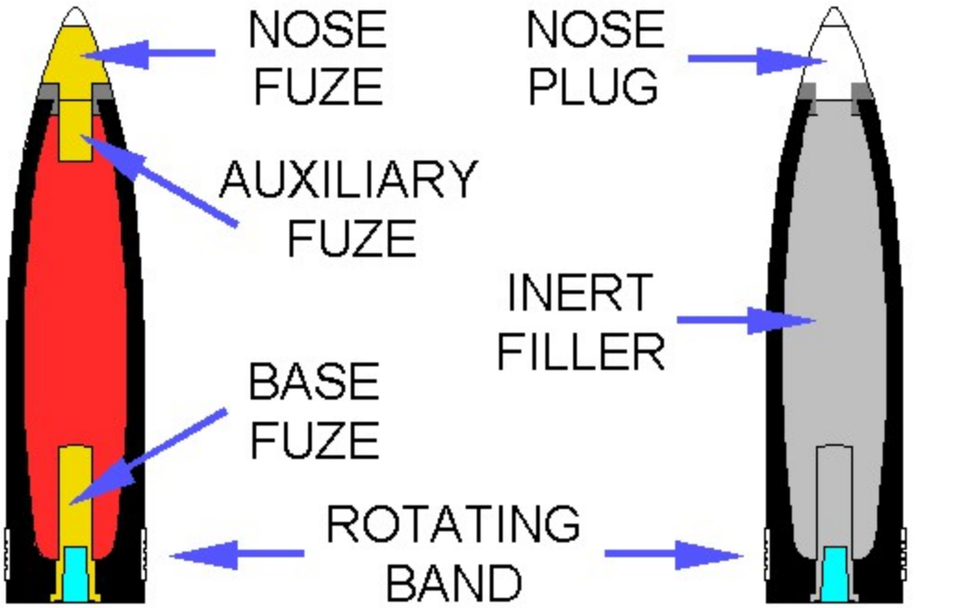

MK 34 HIGH CAPACITY

TRAINING

COPYRIGHT © 2017 BY PHILLIP R. HAYS

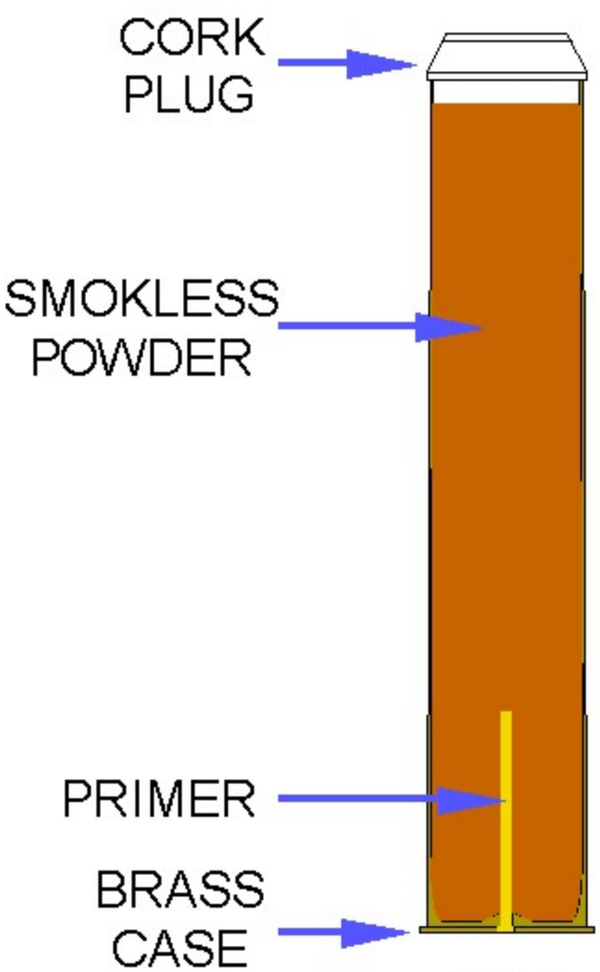

MK 4 POWDER CASE

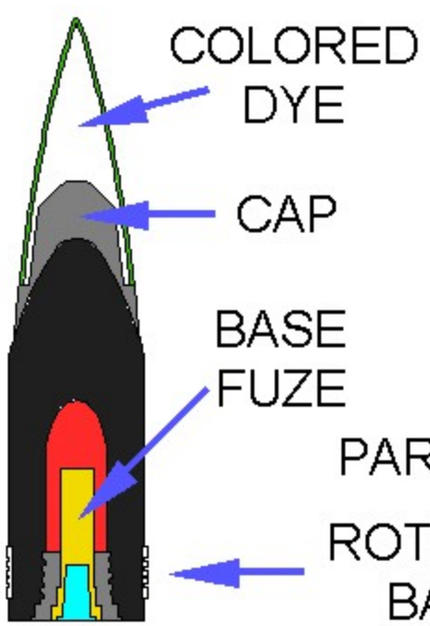

MK 35 ARMOR PIERCING

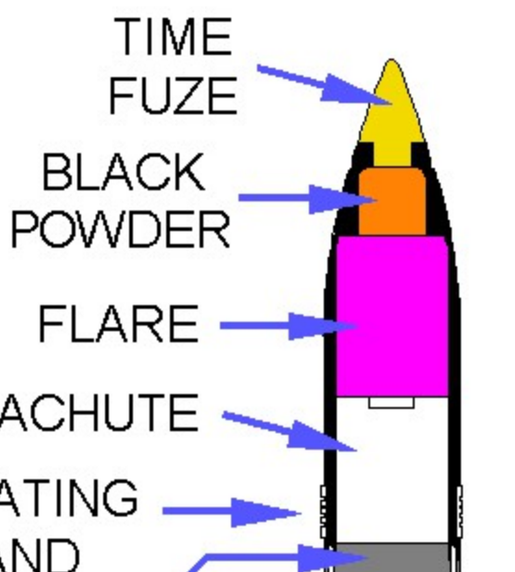

MK 32 ILLUMINATION (STAR SHELL)

6" GUN MARK XVI 47 CALIBER GUN

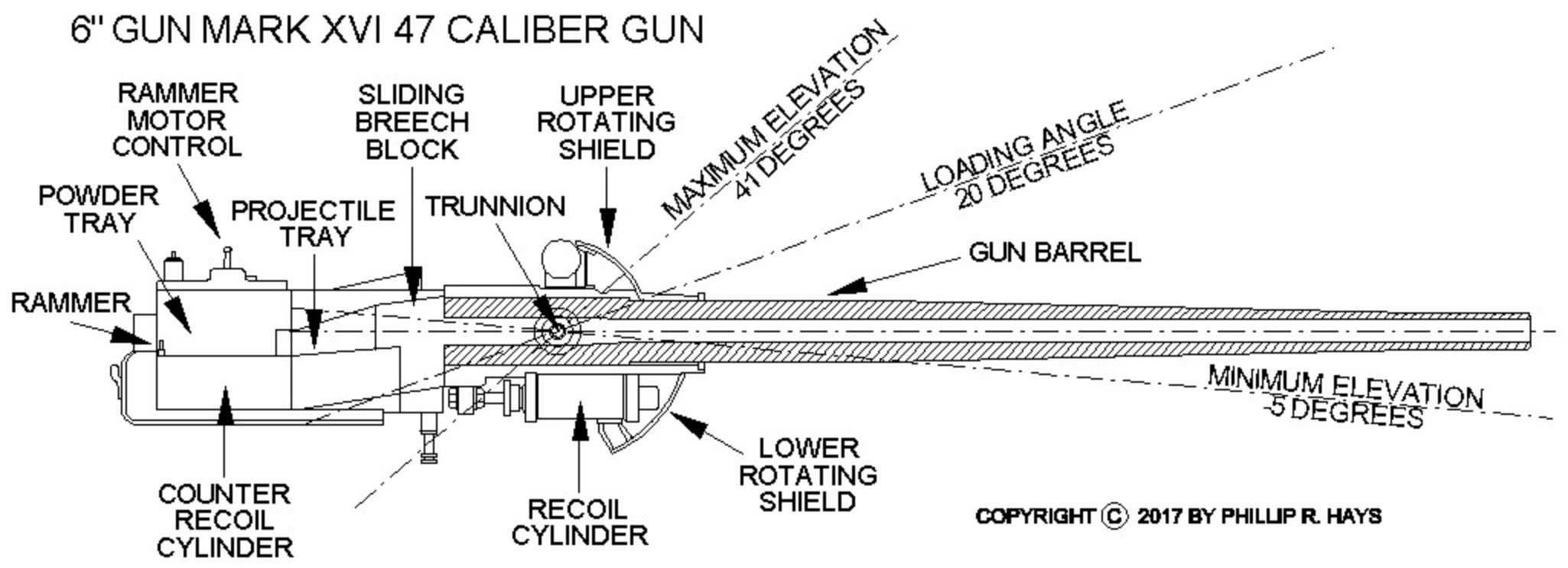

COPYRIGHT © 2017 BY PHILLIP R. HAYS

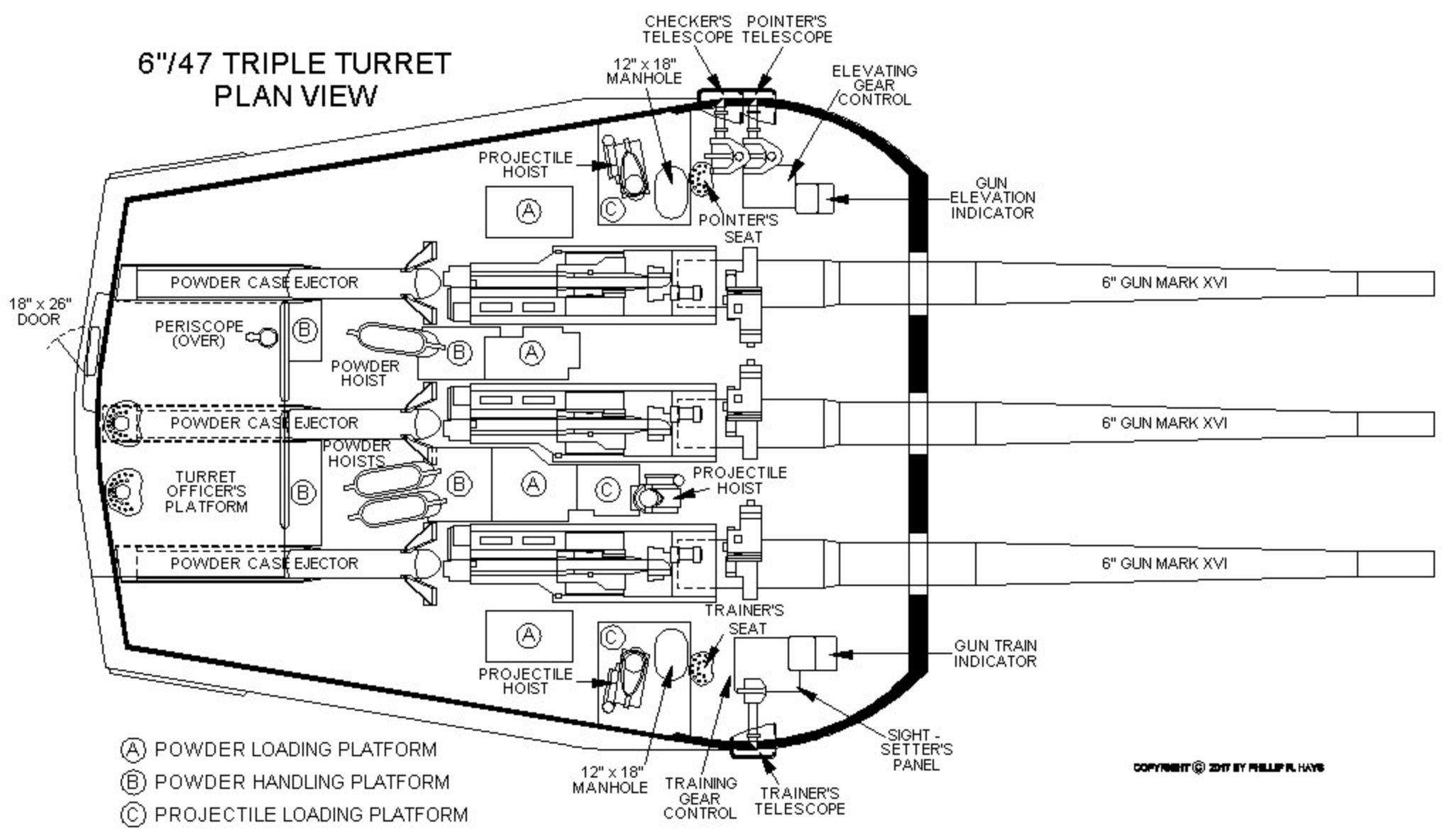

COPYRIGHT © 2017 BY PHILLIP R. HAYS

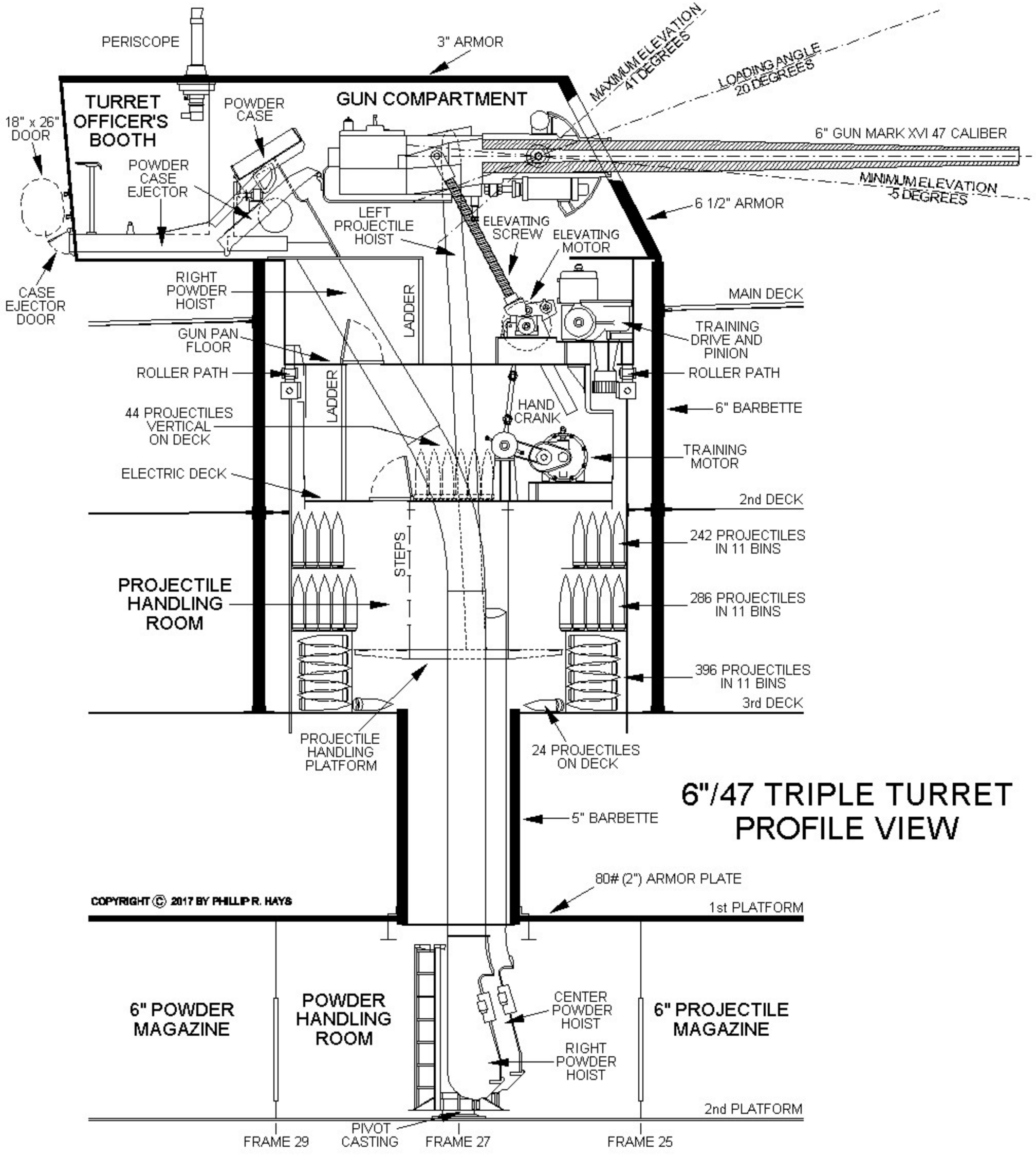
PERISCOPE
3" ARMOR
MAXIMUM ELEVATION
41 DEGREES
LOADING ANGLE
20 DEGREES
TURRET
OFFICER'S
BOOTH
POWDER
CASE
GUN COMPARTMENT
18" x 26"
DOOR
6" GUN MARK XVI 47 CALIBER
POWDER
CASE
EJECTOR
MINIMUM ELEVATION
-5 DEGREES
6 1/2" ARMOR
LEFT
PROJECTILE
HOIST
ELEVATING
SCREW
ELEVATING
MOTOR
CASE
EJECTOR
DOOR
RIGHT
POWDER
HOIST
LADDER
MAIN DECK
GUN PAN
FLOOR
TRAINING
DRIVE AND
PINION
ROLLER PATH
LADDER
ROLLER PATH
HAND
CRANK
6" BARBETTE
44 PROJECTILES
VERTICAL
ON DECK
TRAINING
MOTOR
ELECTRIC DECK
2nd DECK
STEPS
242 PROJECTILES
IN 11 BINS
PROJECTILE
HANDLING
ROOM
286 PROJECTILES
IN 11 BINS
396 PROJECTILES
IN 11 BINS
3rd DECK
PROJECTILE
HANDLING
PLATFORM
24 PROJECTILES
ON DECK
6"/47 TRIPLE TURRET
PROFILE VIEW
5" BARBETTE
80# (2") ARMOR PLATE
COPYRIGHT © 2017 BY PHILLIP R. HAYS
1st PLATFORM
6" POWDER
MAGAZINE
POWDER
HANDLING
ROOM
CENTER
POWDER
HOIST
6" PROJECTILE
MAGAZINE
RIGHT
POWDER
HOIST
2nd PLATFORM
PIVOT
CASTING
FRAME 29
FRAME 27
FRAME 25

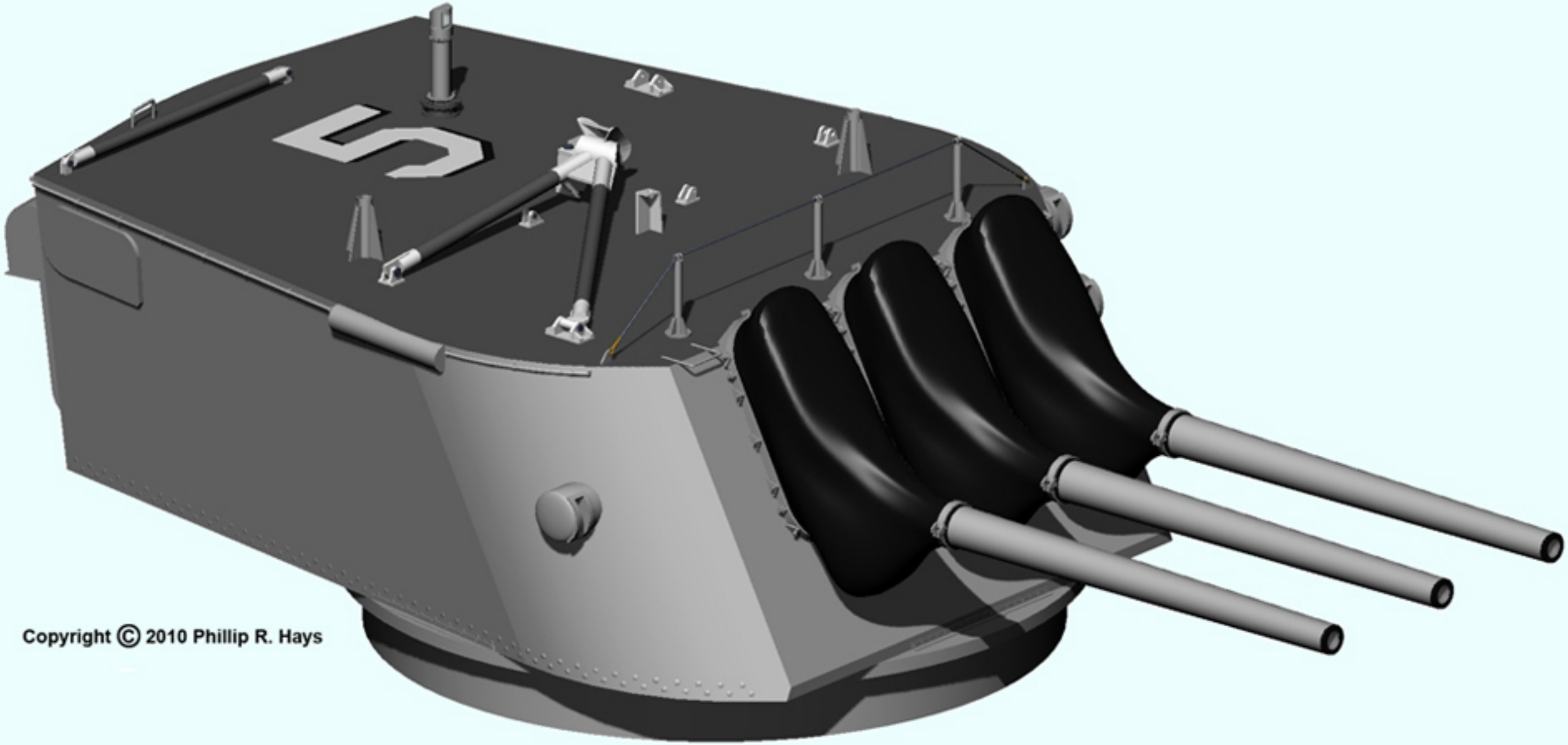

Copyright © 2010 Phillip R. Hays

GUN FIRE CONTROL SYSTEM

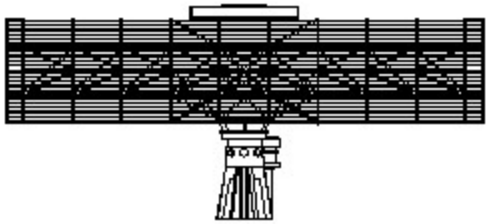

AN/SPS-10

AN/SPS-43

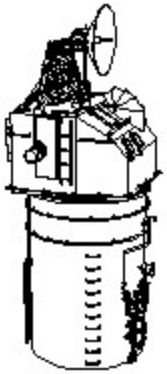

MK 37 DIRECTOR

TDT

SPS-10 CONTROL ROOM

SPS-43 CONTROL ROOM

COMBAT INFORMATION CENTER

SURFACE BATTERY PLOT

DOUBLE PURPOSE BATTERY PLOT

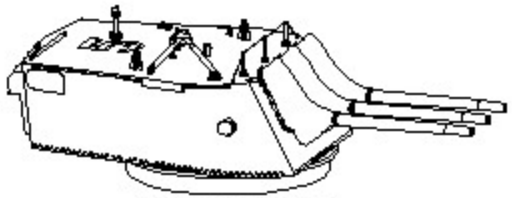

6"/47 TURRET

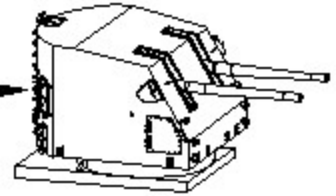

5"/38 MOUNT

COPYRIGHT © 2017 BY PHILLIP R. HAYS

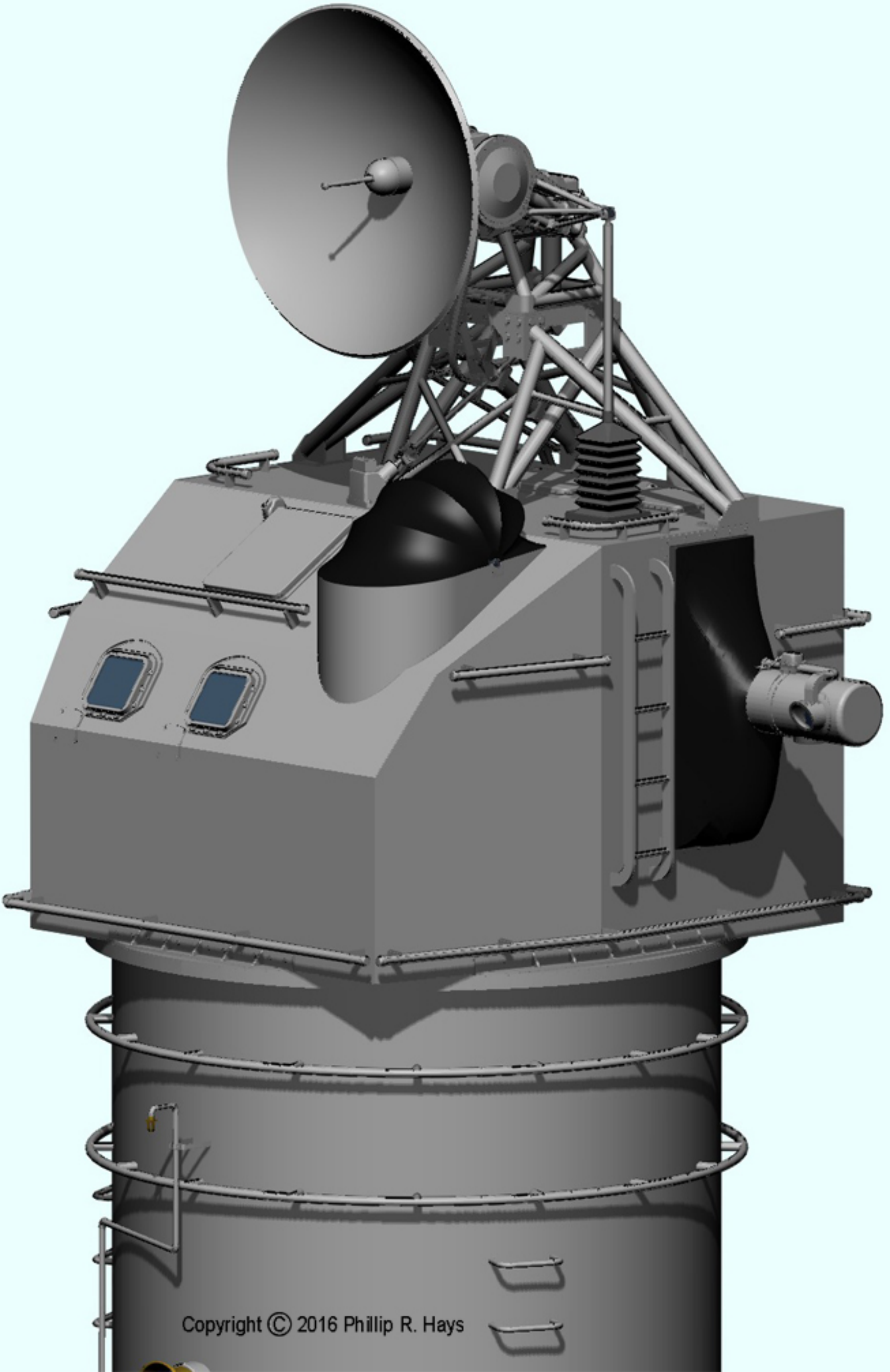
Copyright © 2016 Phillip R. Hays

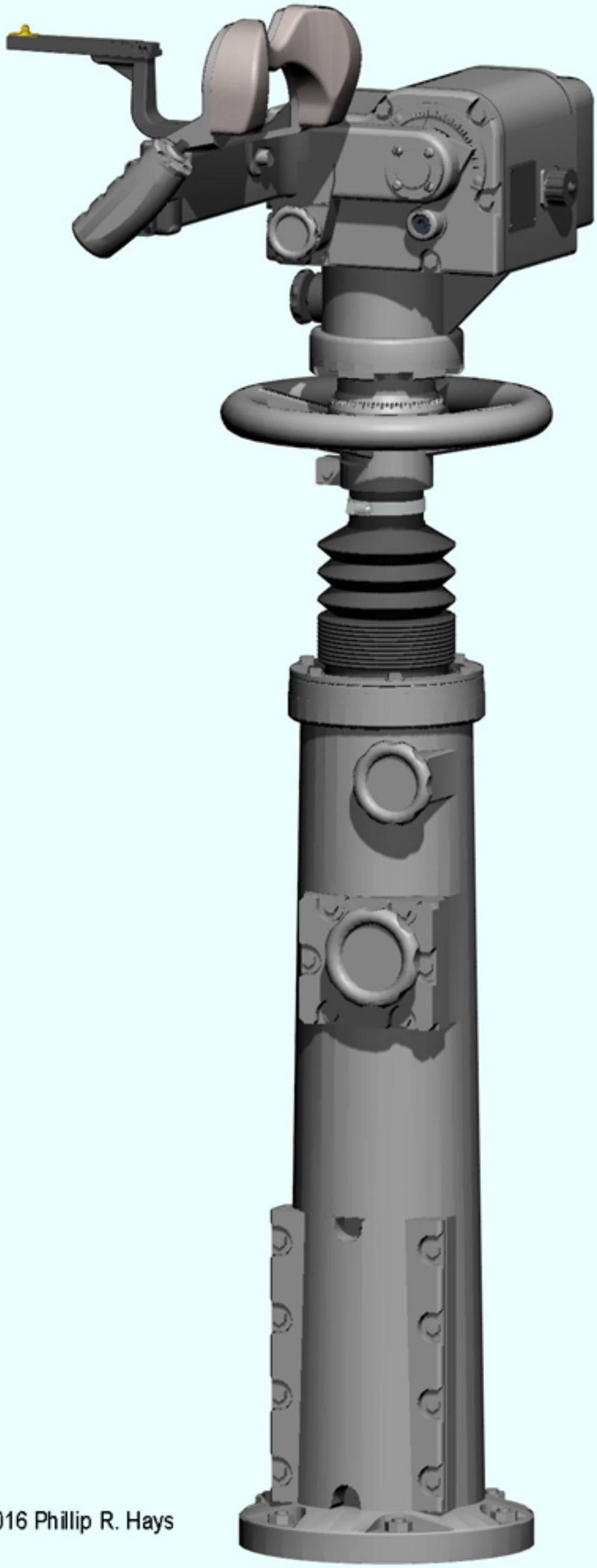

Copyright © 2016 Phillip R. Hays

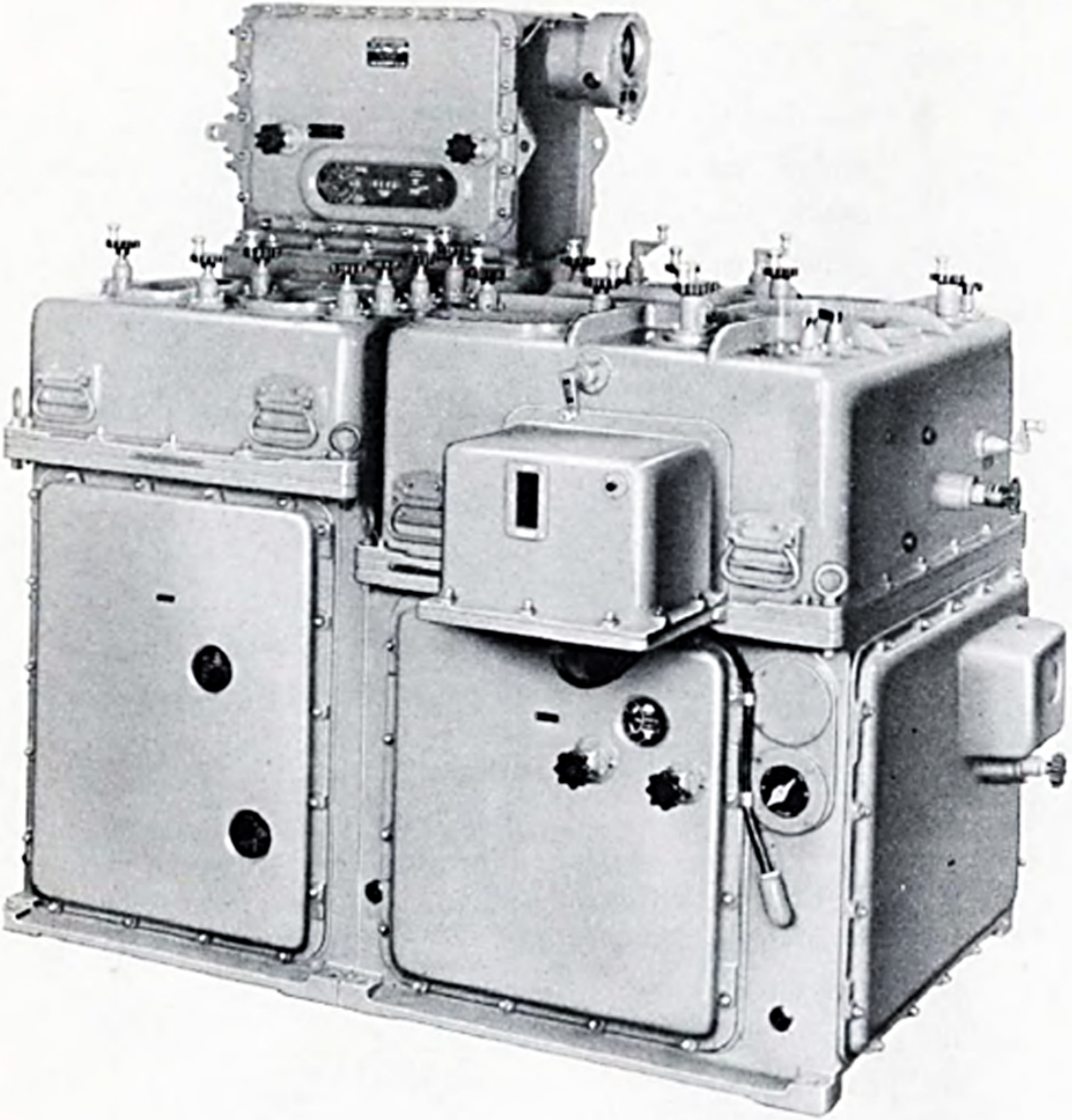

COPYRIGHT © 2017 BY PHILLIP R. HAYS

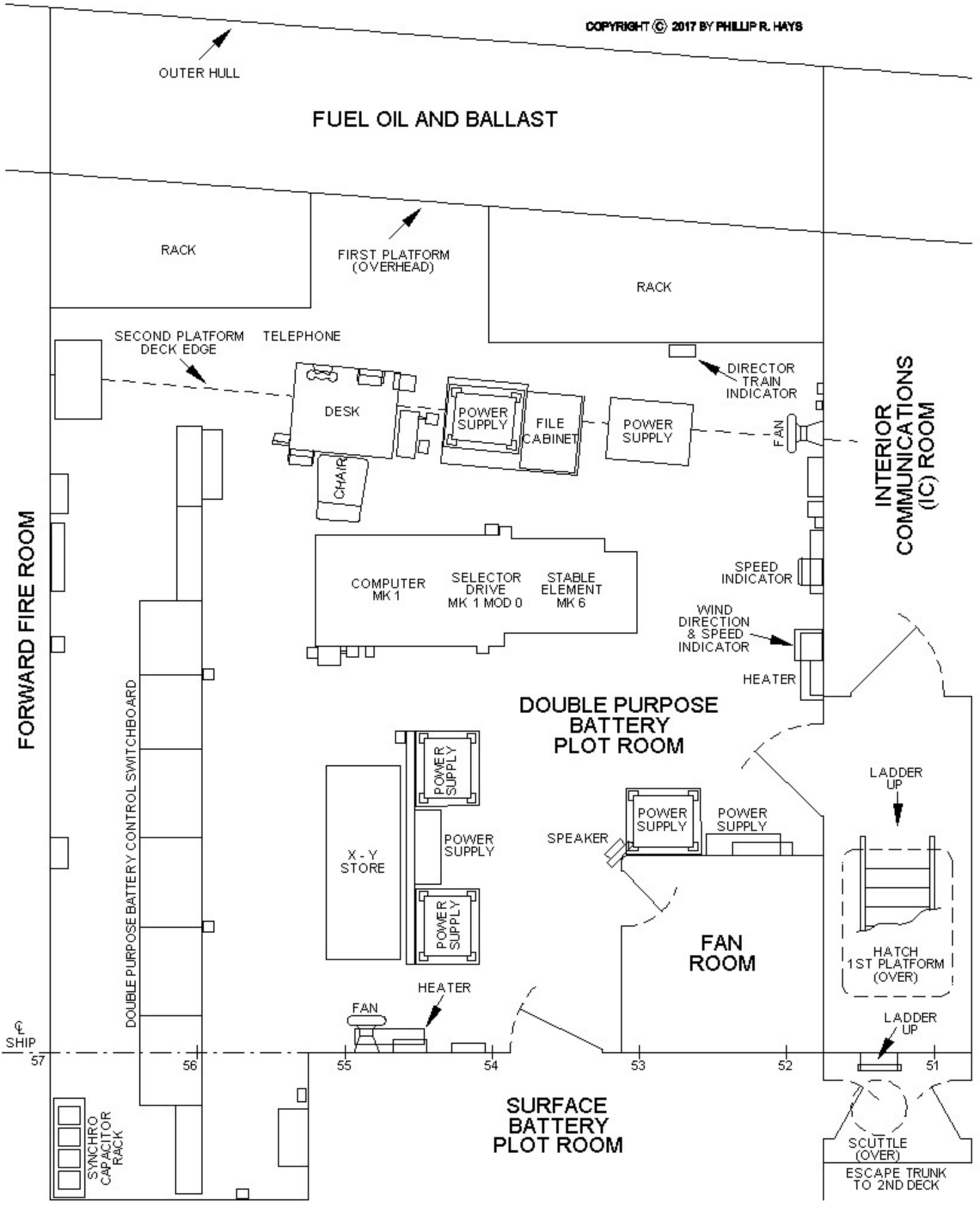

GUN BATTERY CONTROL SYSTEM

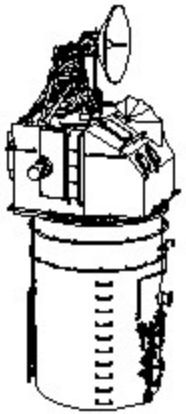

MK 37
DIRECTOR

SURFACE BATTERY PLOT

MK 48
COMPUTER

MK 41
STABLE
VERTICAL

MK 8
RANGEKEEPER

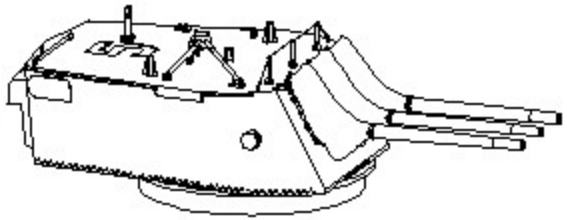

6"/47 TURRET

DOUBLE
PURPOSE
BATTERY
PLOT

MK 6
STABLE
ELEMENT

MK 1A
COMPUTER

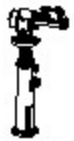

MK 23
TDT

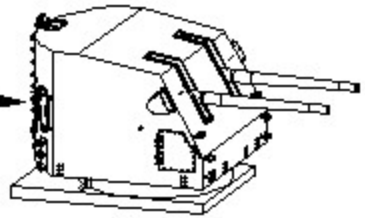

5"/38 MOUNT

COPYRIGHT © 2017 BY PHILLIP R. HAYS

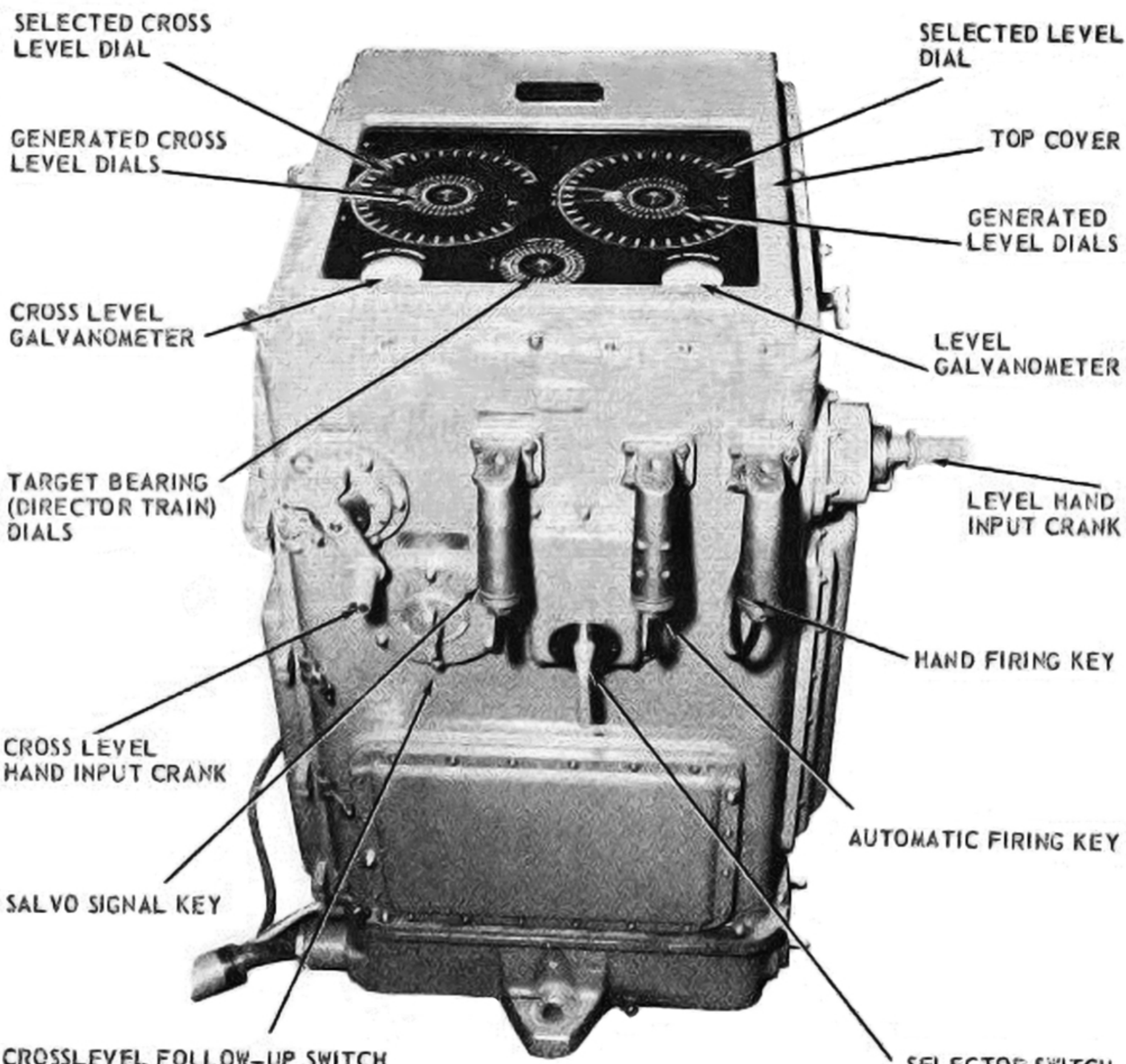
SELECTED CROSS LEVEL DIAL
SELECTED LEVEL DIAL
GENERATED CROSS LEVEL DIALS
TOP COVER
GENERATED LEVEL DIALS
CROSS LEVEL GALVANOMETER
LEVEL GALVANOMETER
TARGET BEARING (DIRECTOR TRAIN) DIALS
LEVEL HAND INPUT CRANK
HAND FIRING KEY
CROSS LEVEL HAND INPUT CRANK
AUTOMATIC FIRING KEY
SALVO SIGNAL KEY
CROSSLEVEL FOLLOW-UP SWITCH
SELECTOR SWITCH

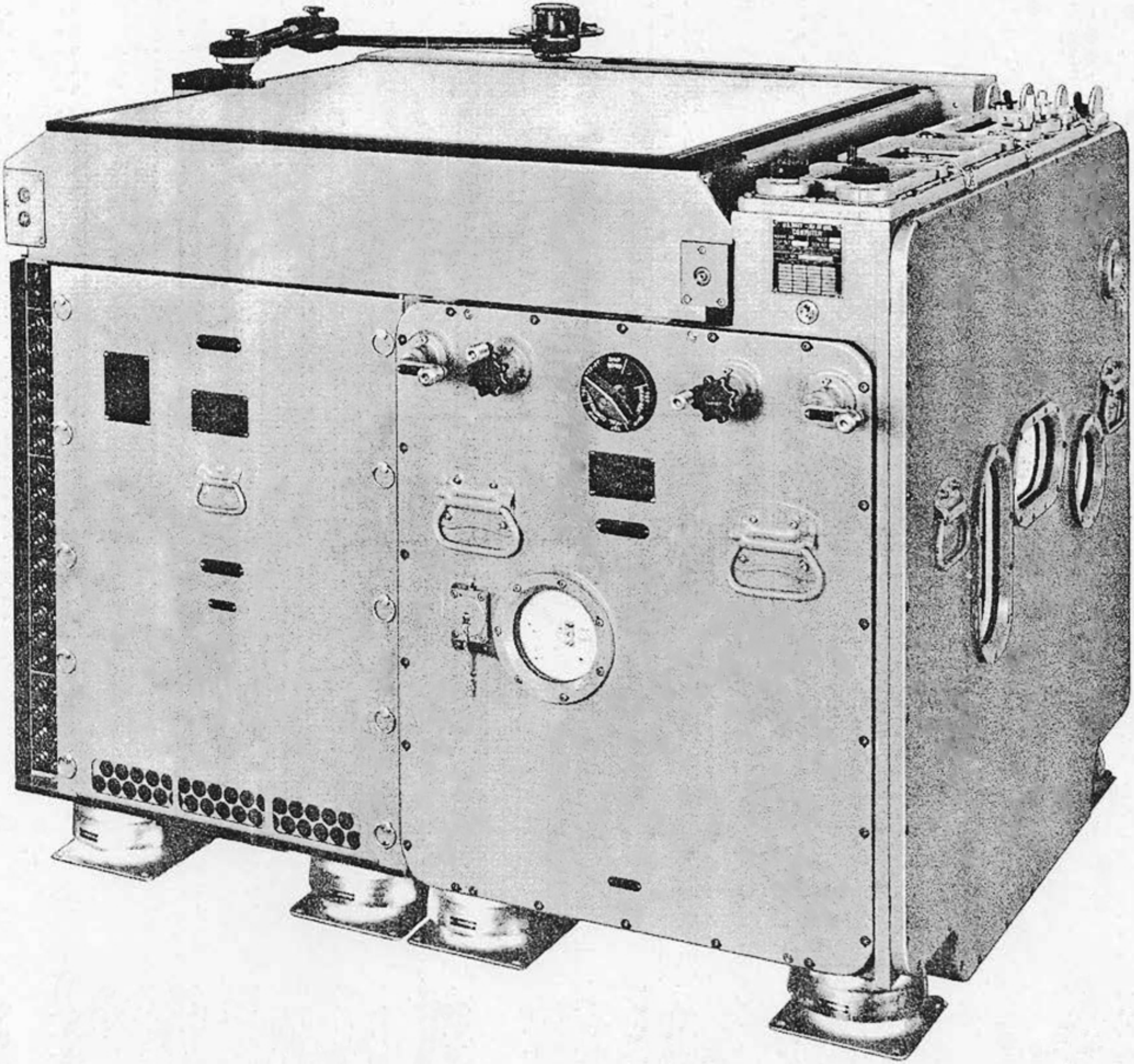

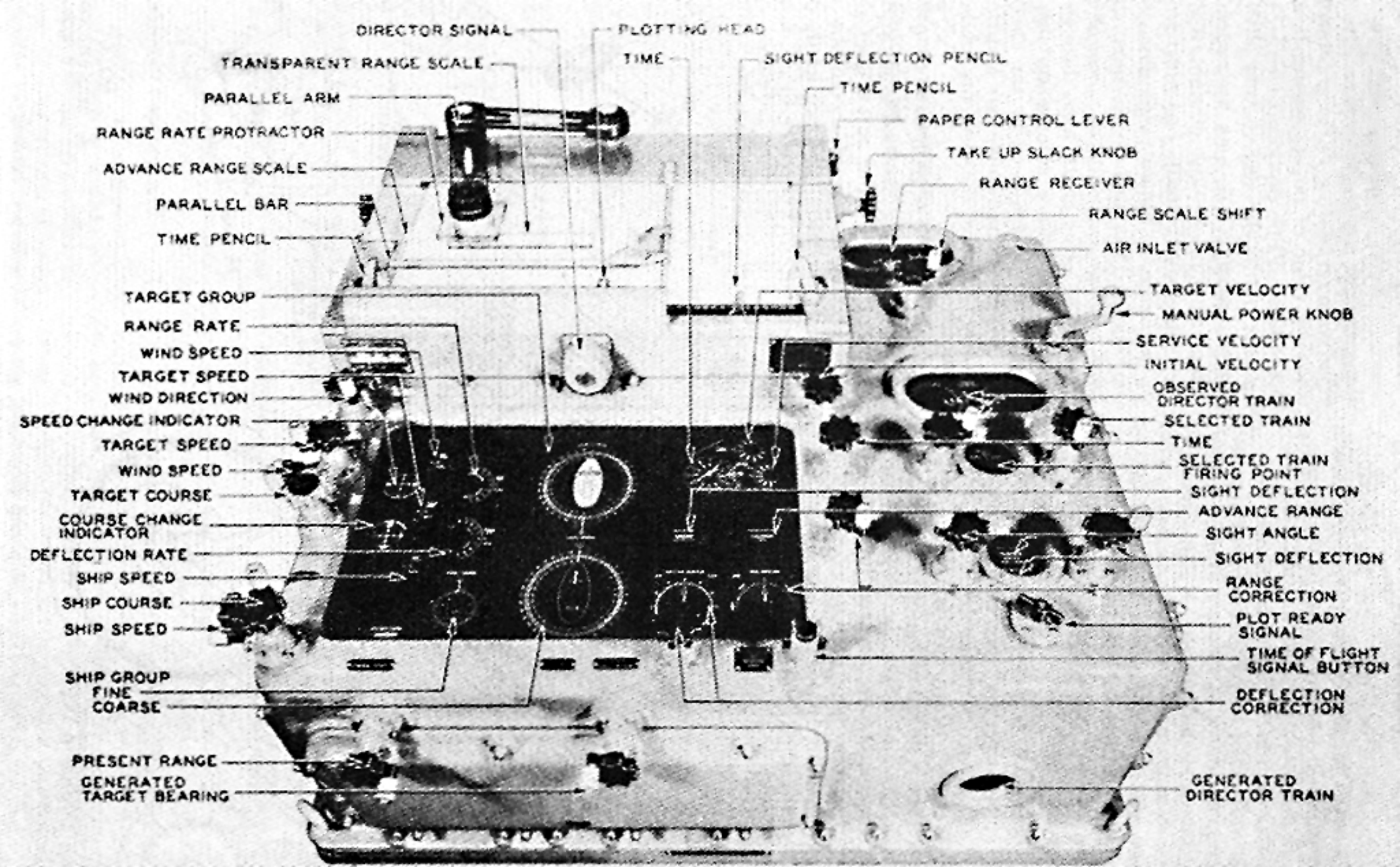
DIRECTOR SIGNAL
PLOTTING HEAD
TRANSPARENT RANGE SCALE
TIME
SIGHT DEFLECTION PENCIL
PARALLEL ARM
TIME PENCIL
RANGE RATE PROTRACTOR
PAPER CONTROL LEVER
ADVANCE RANGE SCALE
TAKE UP SLACK KNOB
PARALLEL BAR
RANGE RECEIVER
TIME PENCIL
RANGE SCALE SHIFT
AIR INLET VALVE
TARGET GROUP
TARGET VELOCITY
RANGE RATE
MANUAL POWER KNOB
WIND SPEED
SERVICE VELOCITY
TARGET SPEED
INITIAL VELOCITY
WIND DIRECTION
OBSERVED DIRECTOR TRAIN
SPEED CHANGE INDICATOR
SELECTED TRAIN
TARGET SPEED
TIME
WIND SPEED
SELECTED TRAIN FIRING POINT
TARGET COURSE
SIGHT DEFLECTION
COURSE CHANGE INDICATOR
ADVANCE RANGE
SIGHT ANGLE
DEFLECTION RATE
SIGHT DEFLECTION
SHIP SPEED
RANGE CORRECTION
SHIP COURSE
PLOT READY SIGNAL
SHIP SPEED
TIME OF FLIGHT SIGNAL BUTTON
SHIP GROUP
FINE
COARSE
DEFLECTION CORRECTION
PRESENT RANGE
GENERATED TARGET BEARING
GENERATED DIRECTOR TRAIN

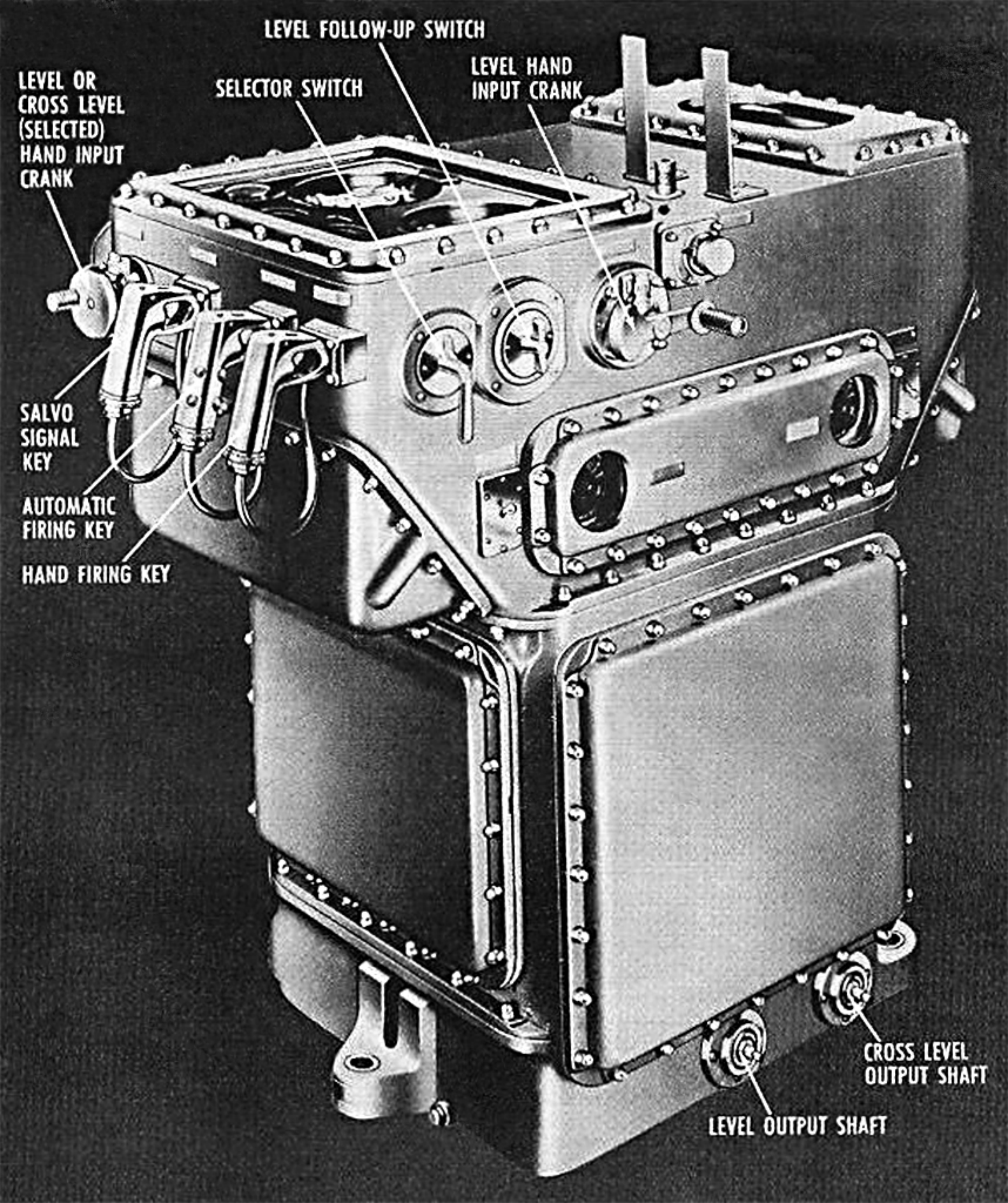
LEVEL FOLLOW-UP SWITCH
LEVEL HAND INPUT CRANK
SELECTOR SWITCH
LEVEL OR CROSS LEVEL (SELECTED) HAND INPUT CRANK
SALVO SIGNAL KEY
AUTOMATIC FIRING KEY
HAND FIRING KEY
CROSS LEVEL OUTPUT SHAFT
LEVEL OUTPUT SHAFT

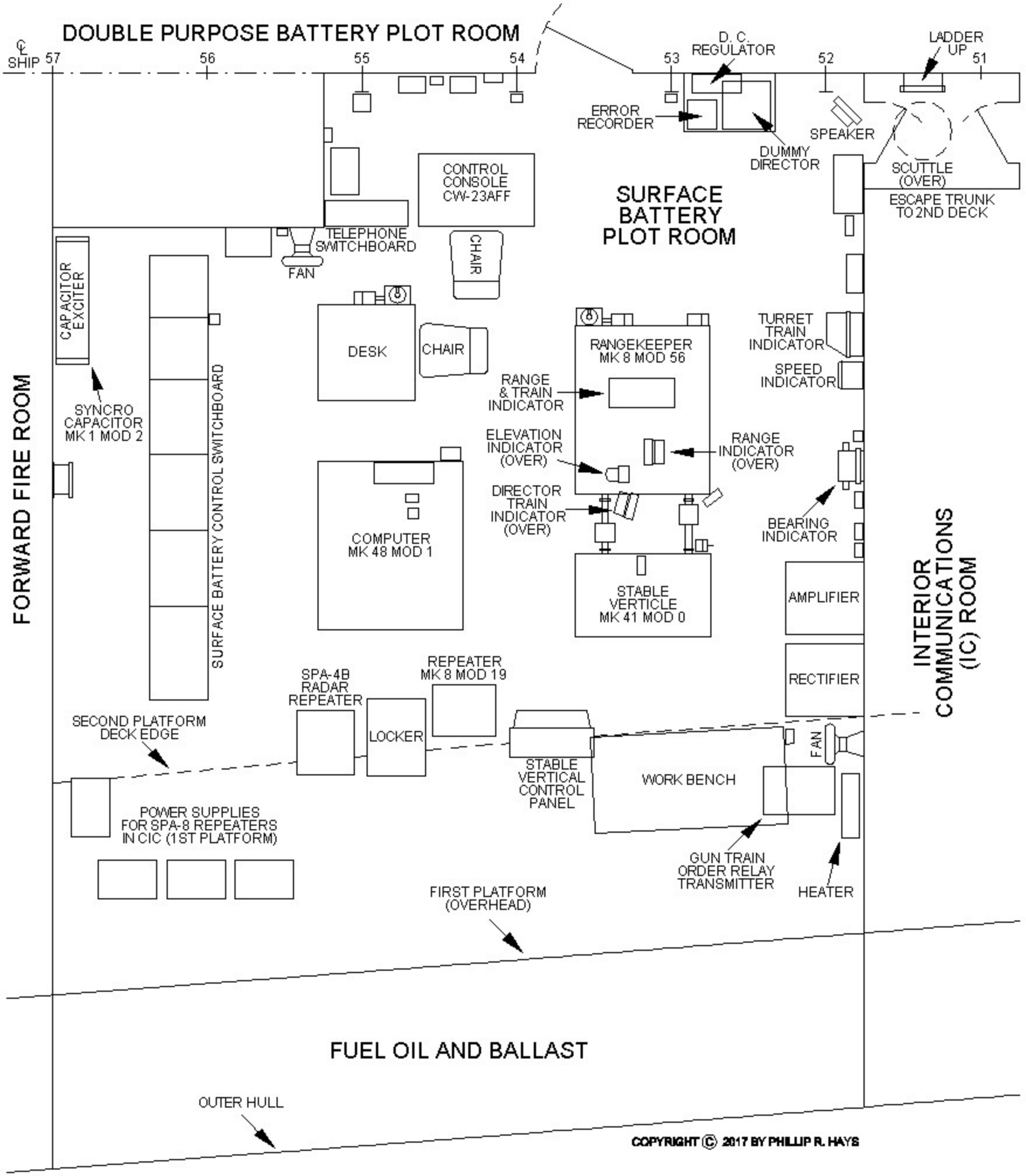

COPYRIGHT © 2017 BY PHILLIP R. HAYS

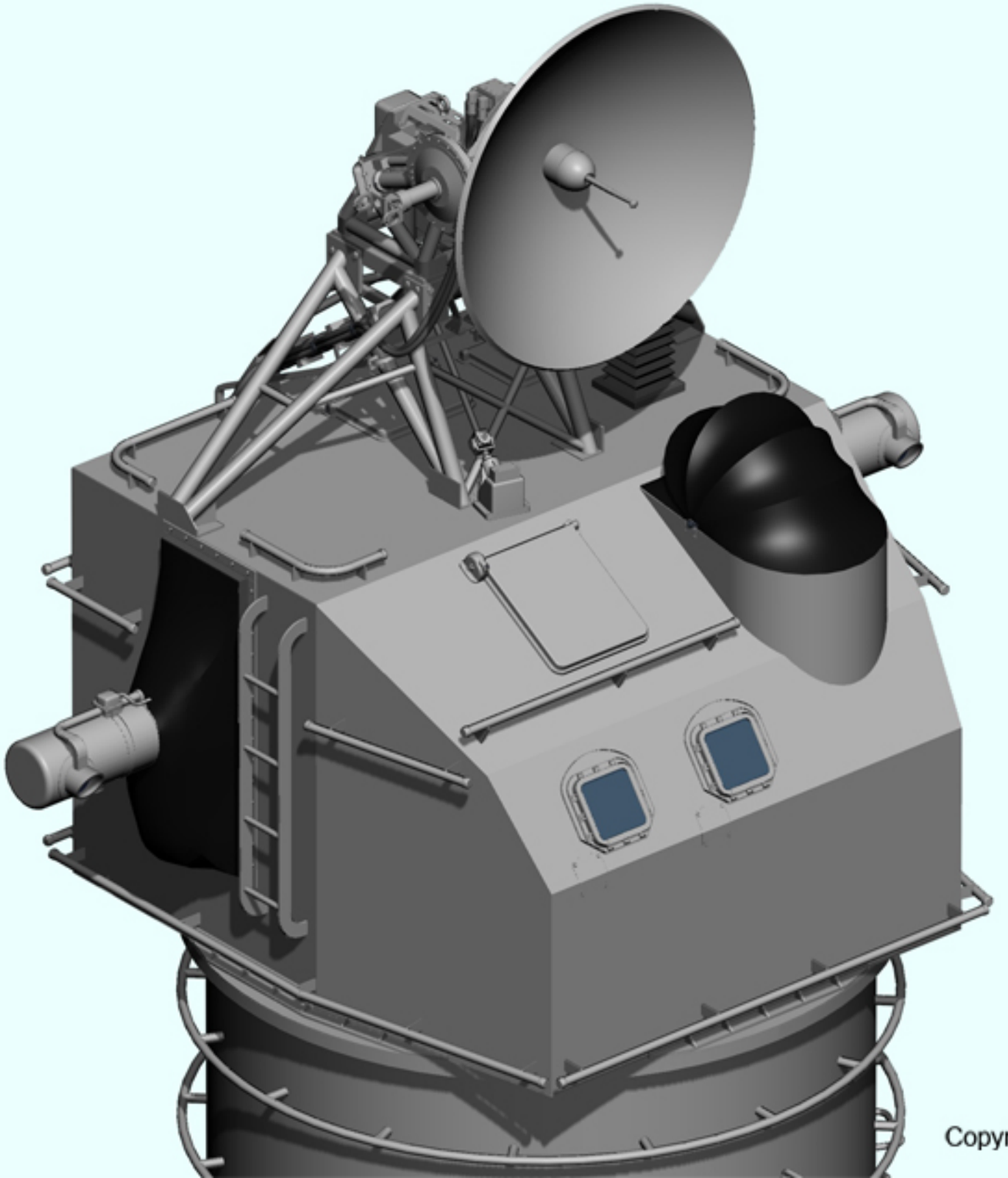

Copyright © 2017 Phillip R. Hays

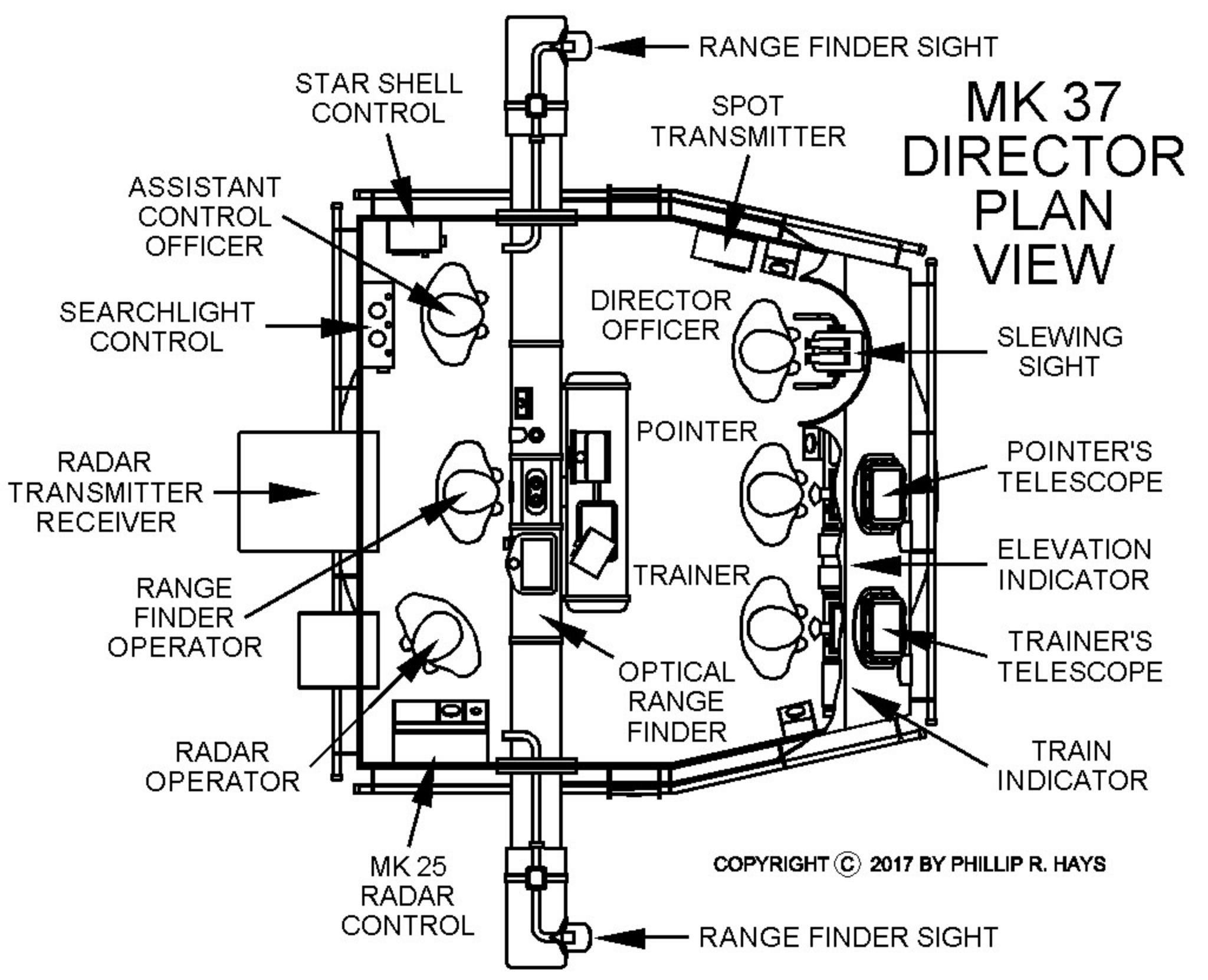
MK 37
DIRECTOR
PLAN
VIEW
RANGE FINDER SIGHT
STAR SHELL
CONTROL
SPOT
TRANSMITTER
ASSISTANT
CONTROL
OFFICER
SEARCHLIGHT
CONTROL
DIRECTOR
OFFICER
SLEWING
SIGHT
POINTER
POINTER'S
TELESCOPE
RADAR
TRANSMITTER
RECEIVER
ELEVATION
INDICATOR
TRAINER
RANGE
FINDER
OPERATOR
TRAINER'S
TELESCOPE
OPTICAL
RANGE
FINDER
RADAR
OPERATOR
TRAIN
INDICATOR
MK 25
RADAR
CONTROL
RANGE FINDER SIGHT
COPYRIGHT © 2017 BY PHILLIP R. HAYS

MK 37 DIRECTOR PROFILE VIEW

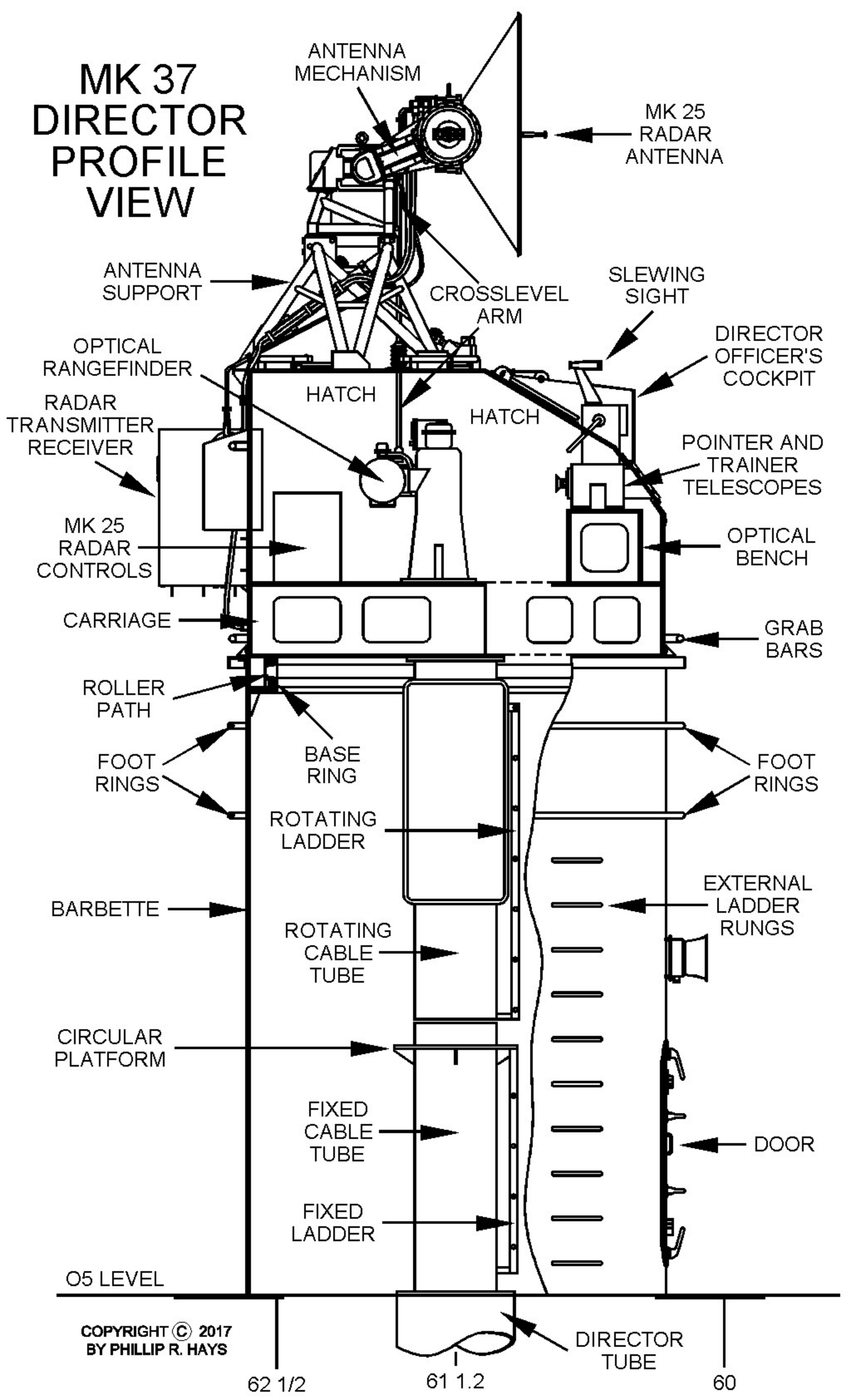

COPYRIGHT © 2017
BY PHILLIP R. HAYS

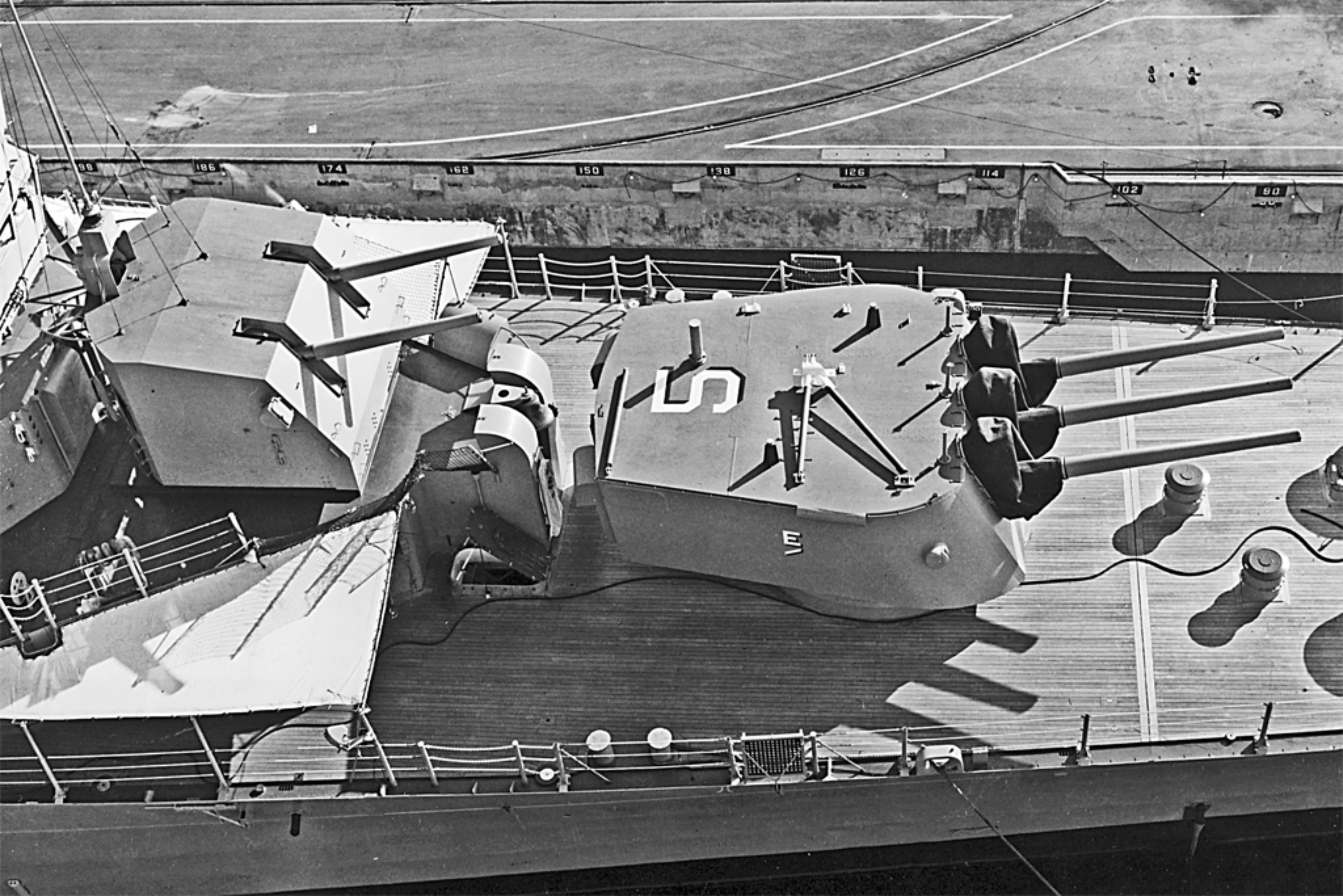
186
174
162
150
138
126
114
102
90

EARLY BURNER TEST VEHICLE

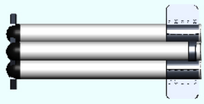

COBRA MODEL 3B

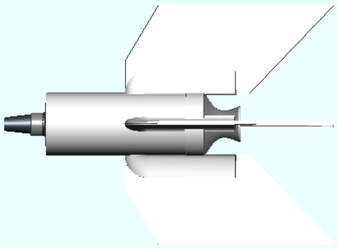

BURNER TEST VEHICLE PTV-N-4

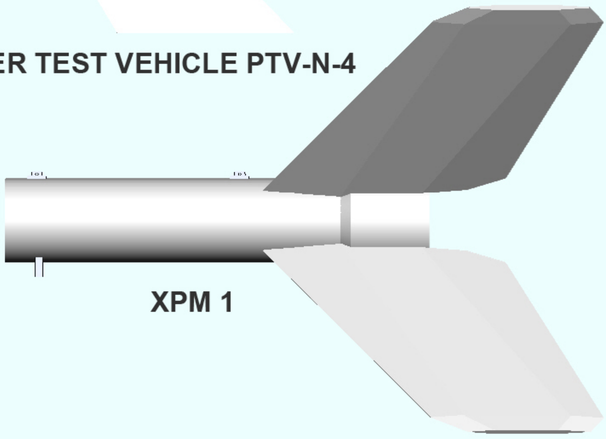

XPM 1

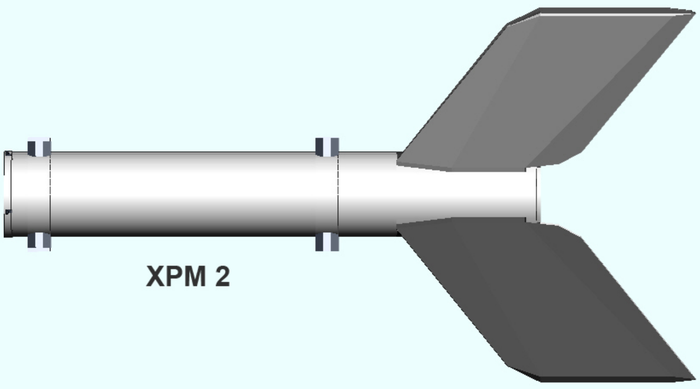

XPM 2

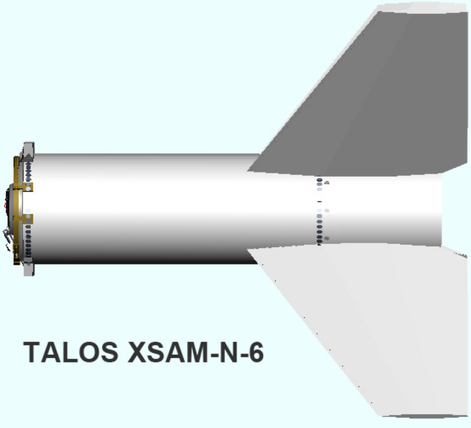

TALOS XSAM-N-6

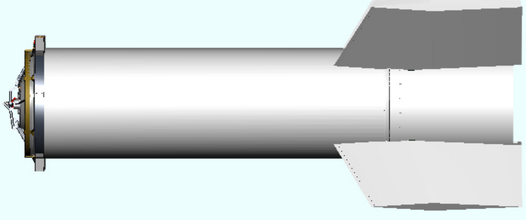

RIM-8A FIRST TACTICAL TALOS

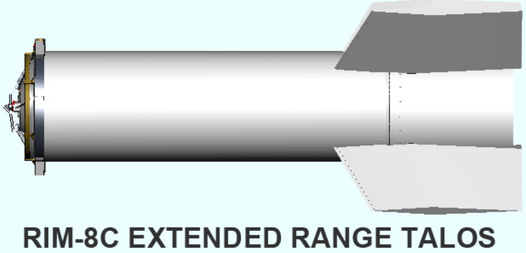

RIM-8C EXTENDED RANGE TALOS

Copyright © 2011 Phillip R. Hays

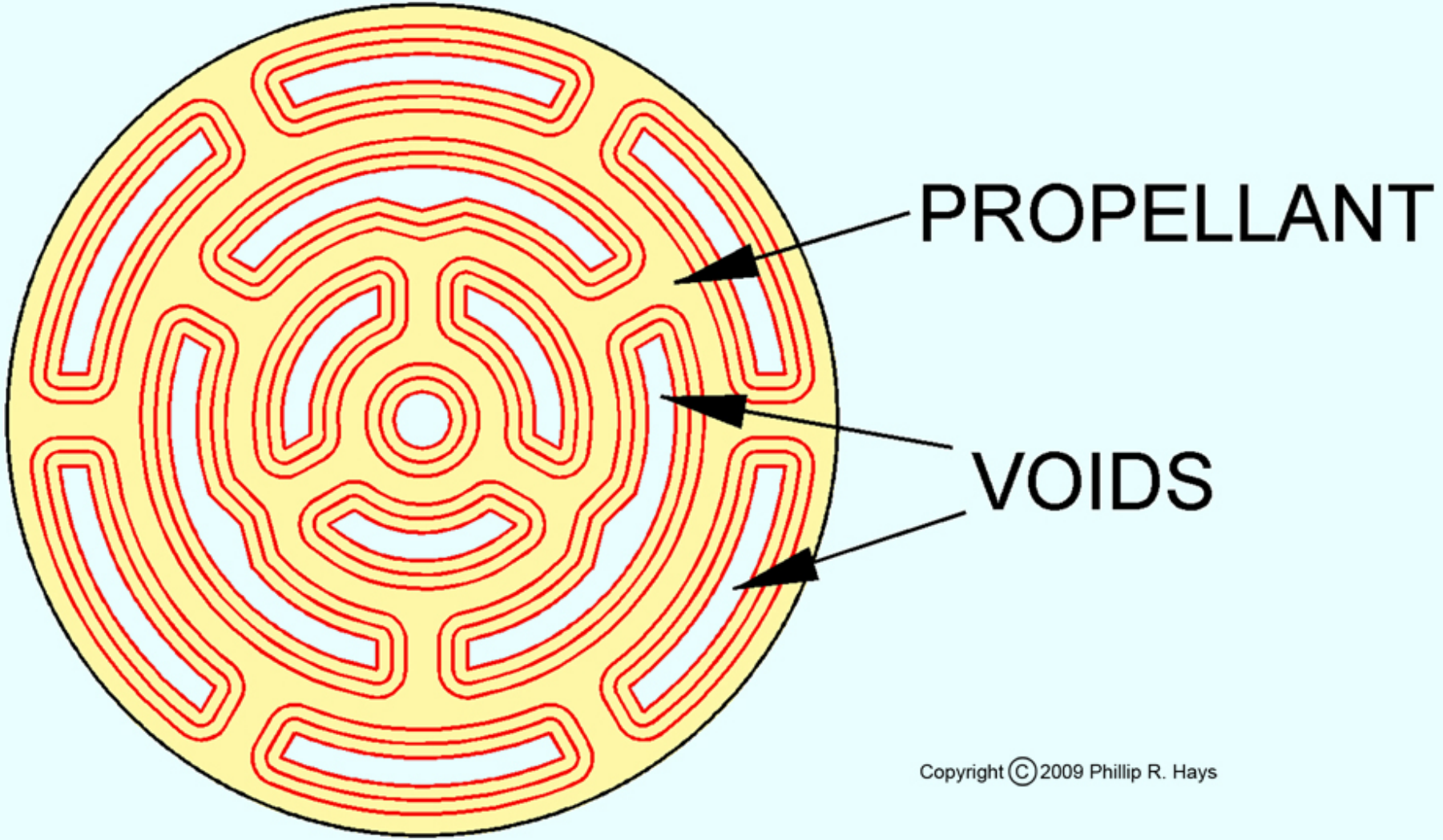

Copyright © 2009 Phillip R. Hays

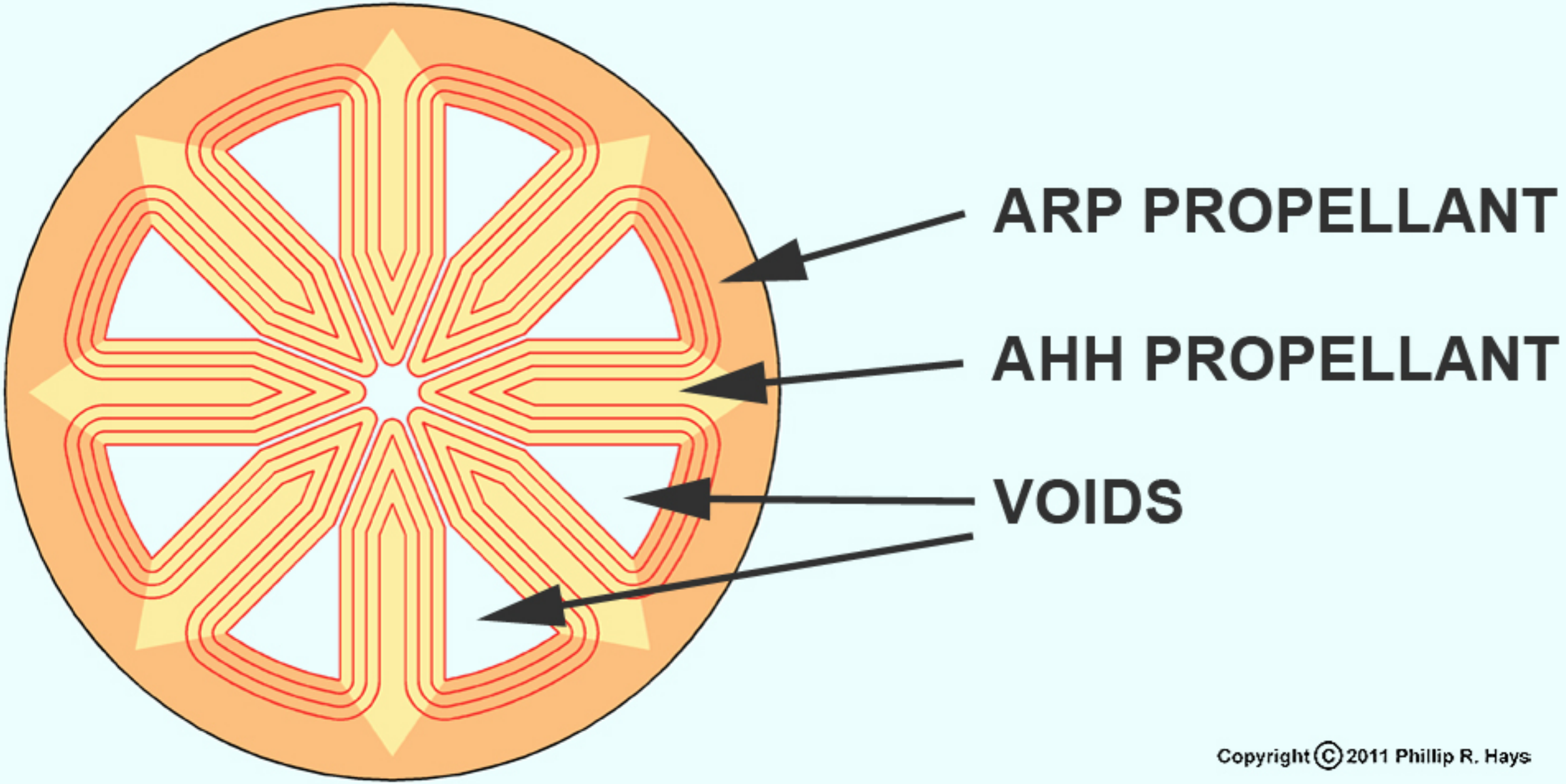

Copyright © 2011 Phillip R. Hays

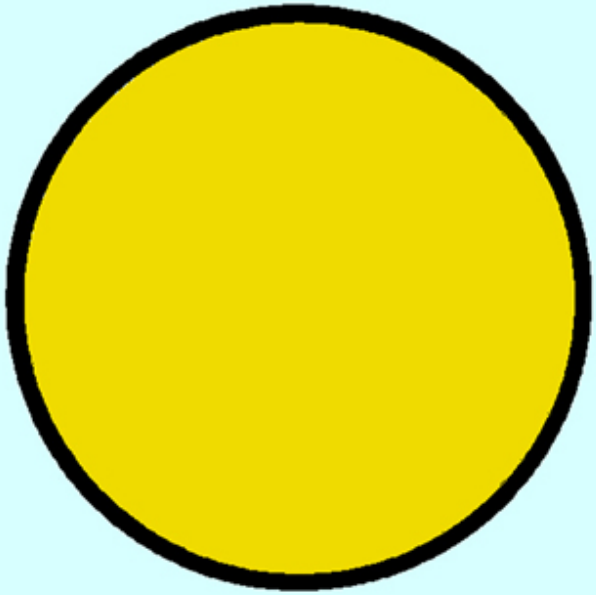
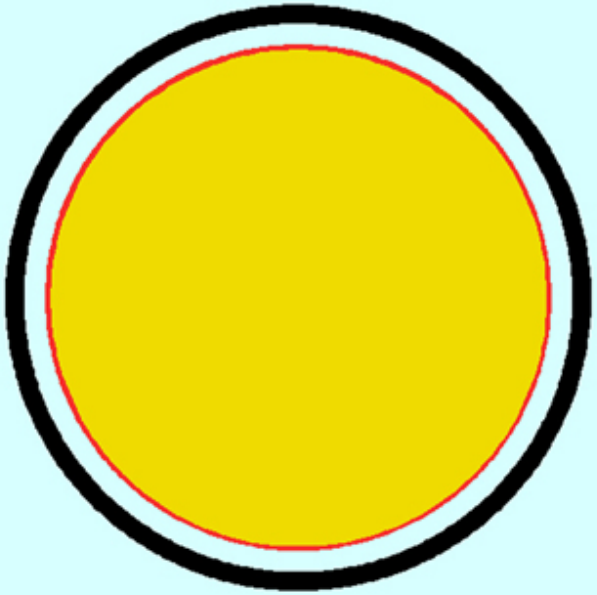
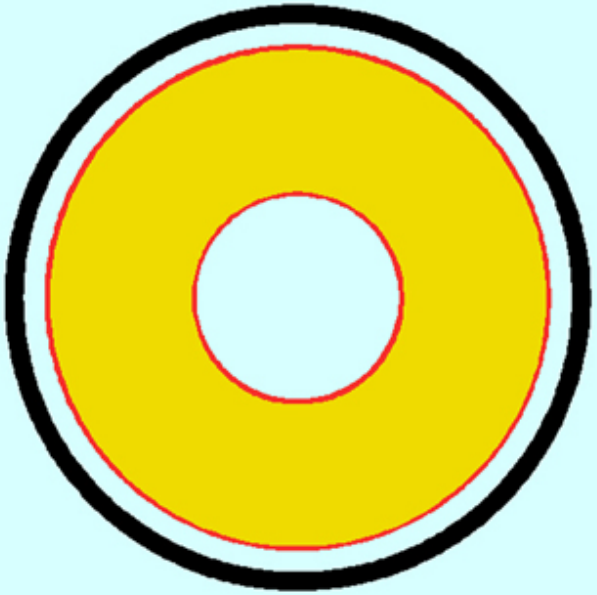

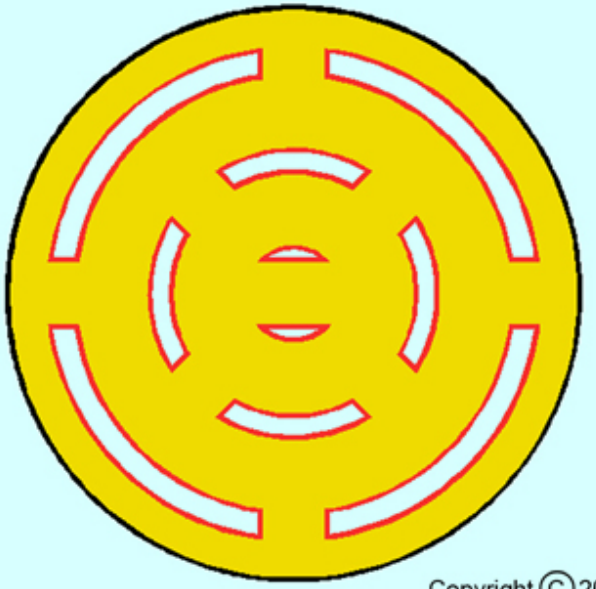
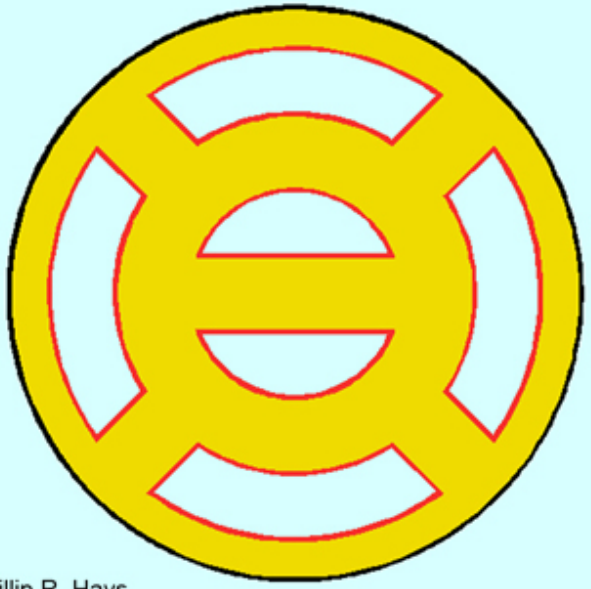

Copyright © 2009 Phillip R. Hays

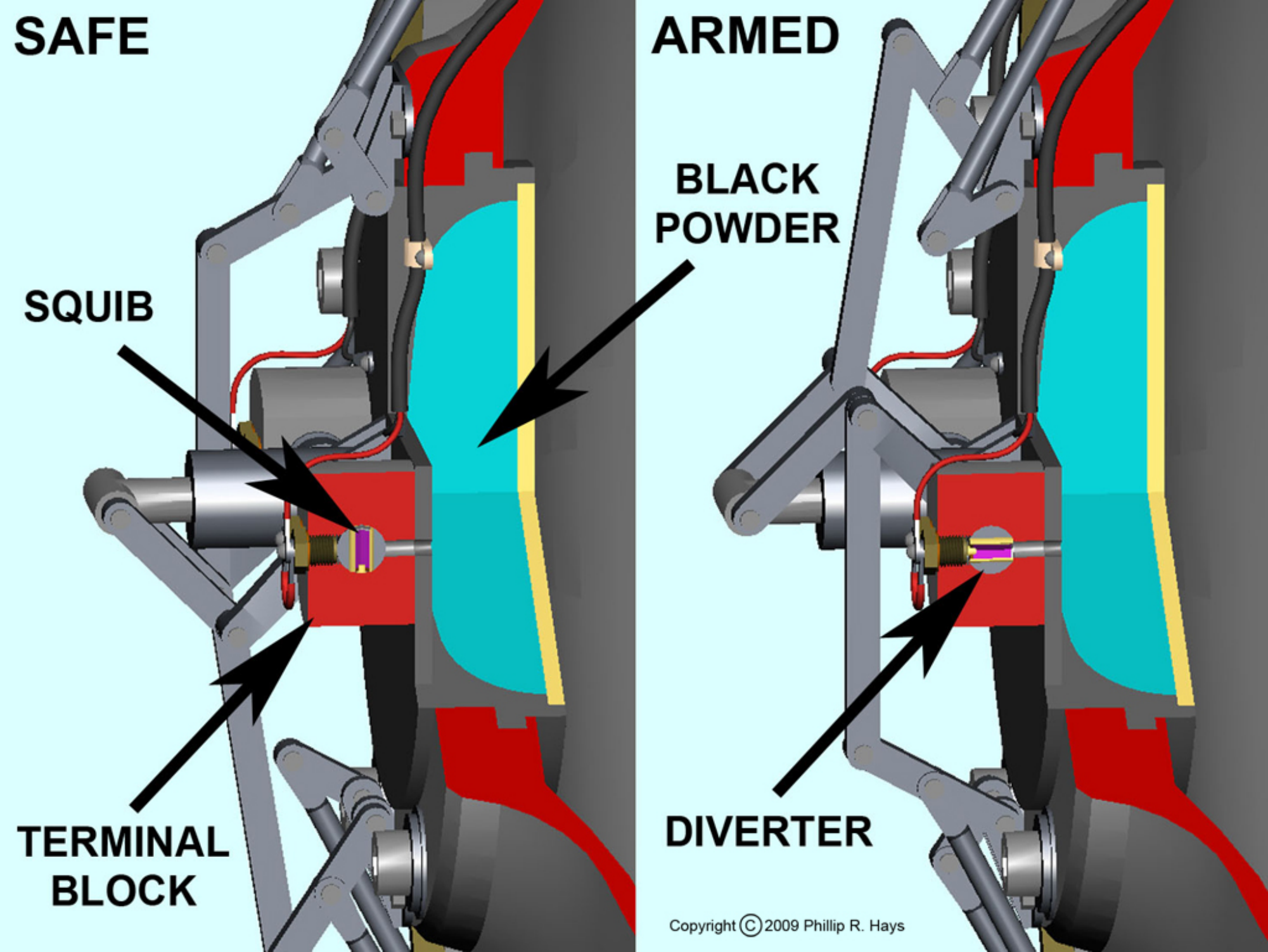
SAFE
ARMED
BLACK POWDER
SQUIB
TERMINAL BLOCK
DIVERTER
Copyright © 2009 Phillip R. Hays

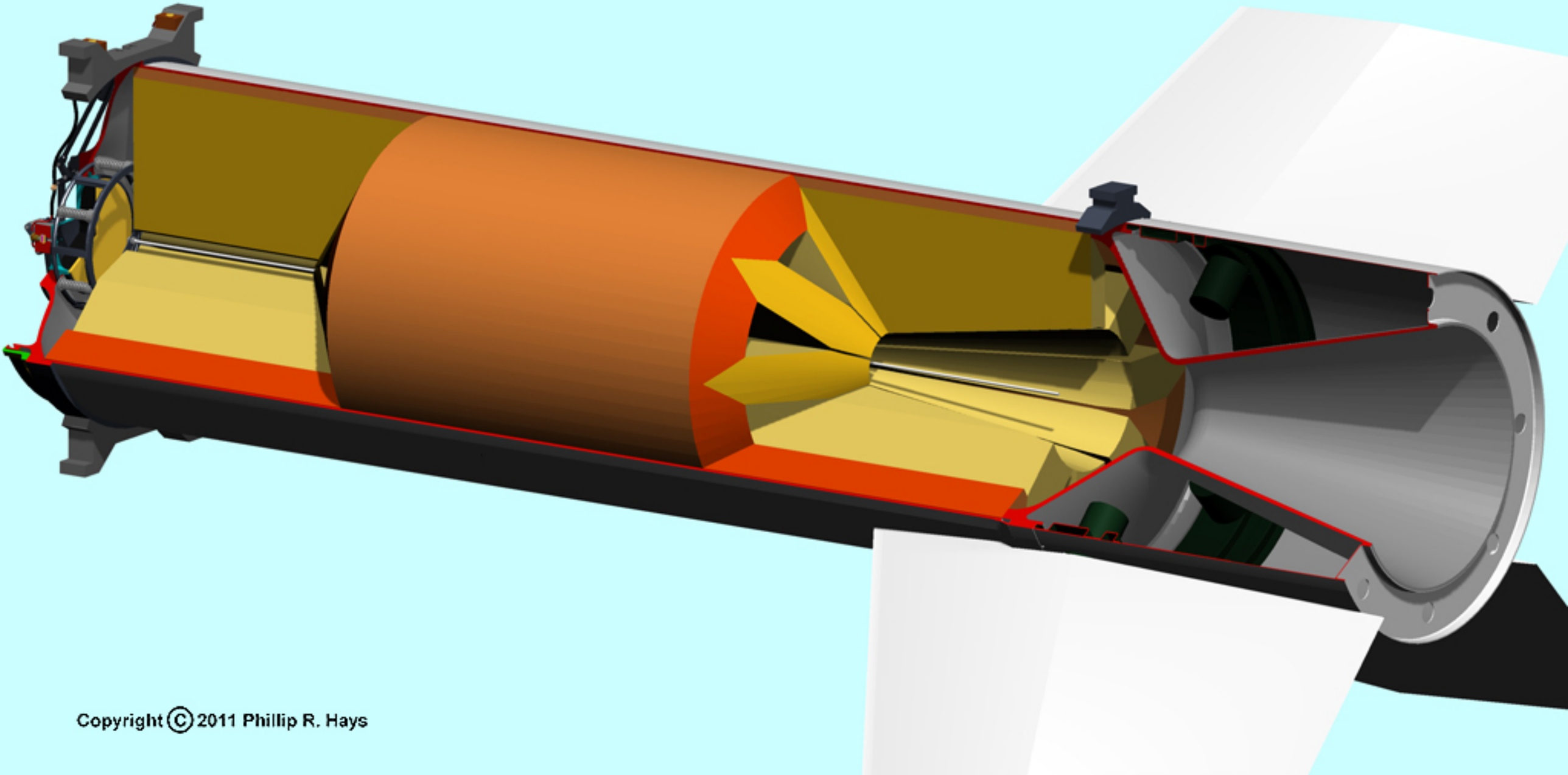

Copyright © 2011 Phillip R. Hays

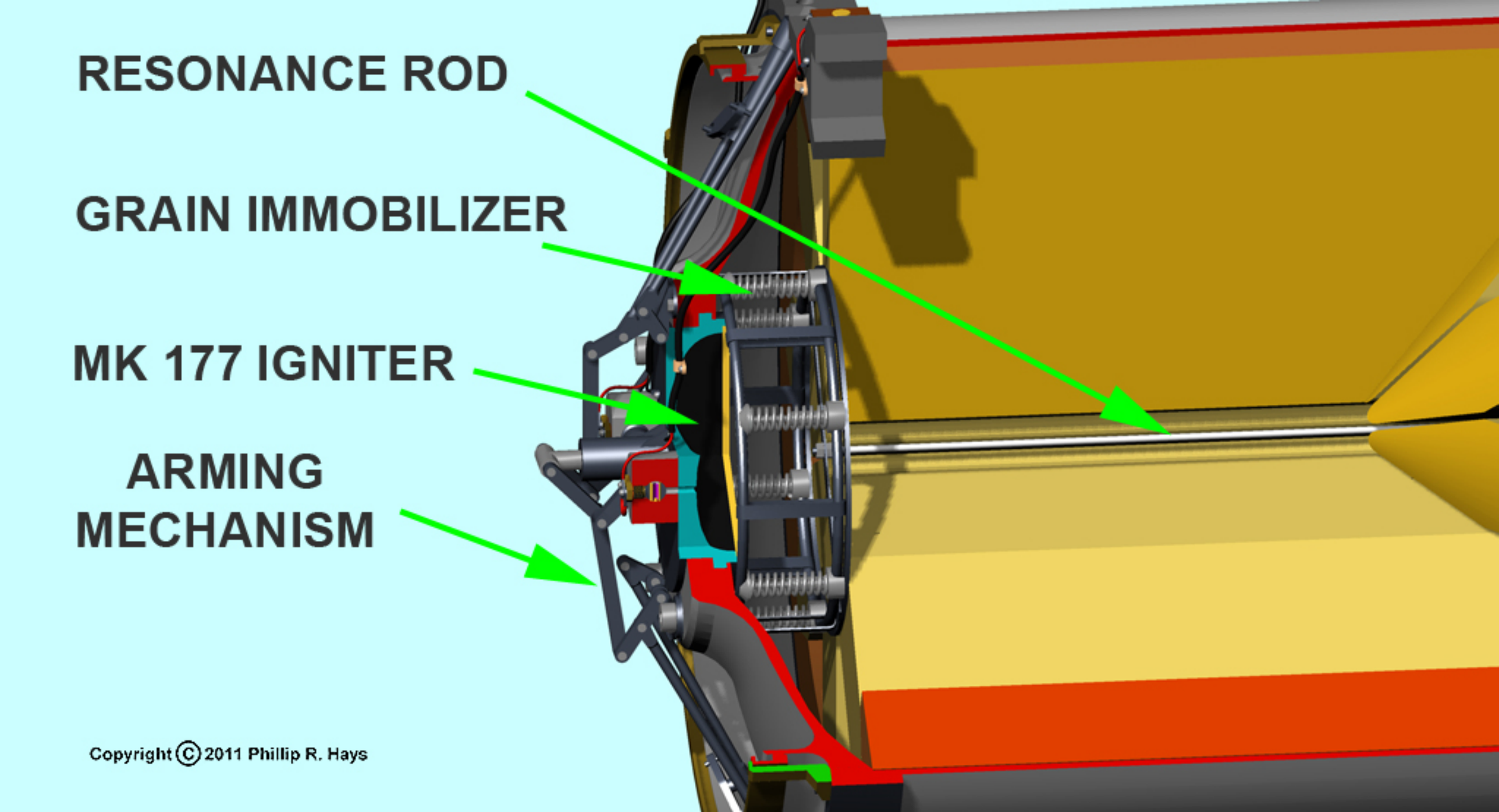

Copyright © 2011 Phillip R. Hays

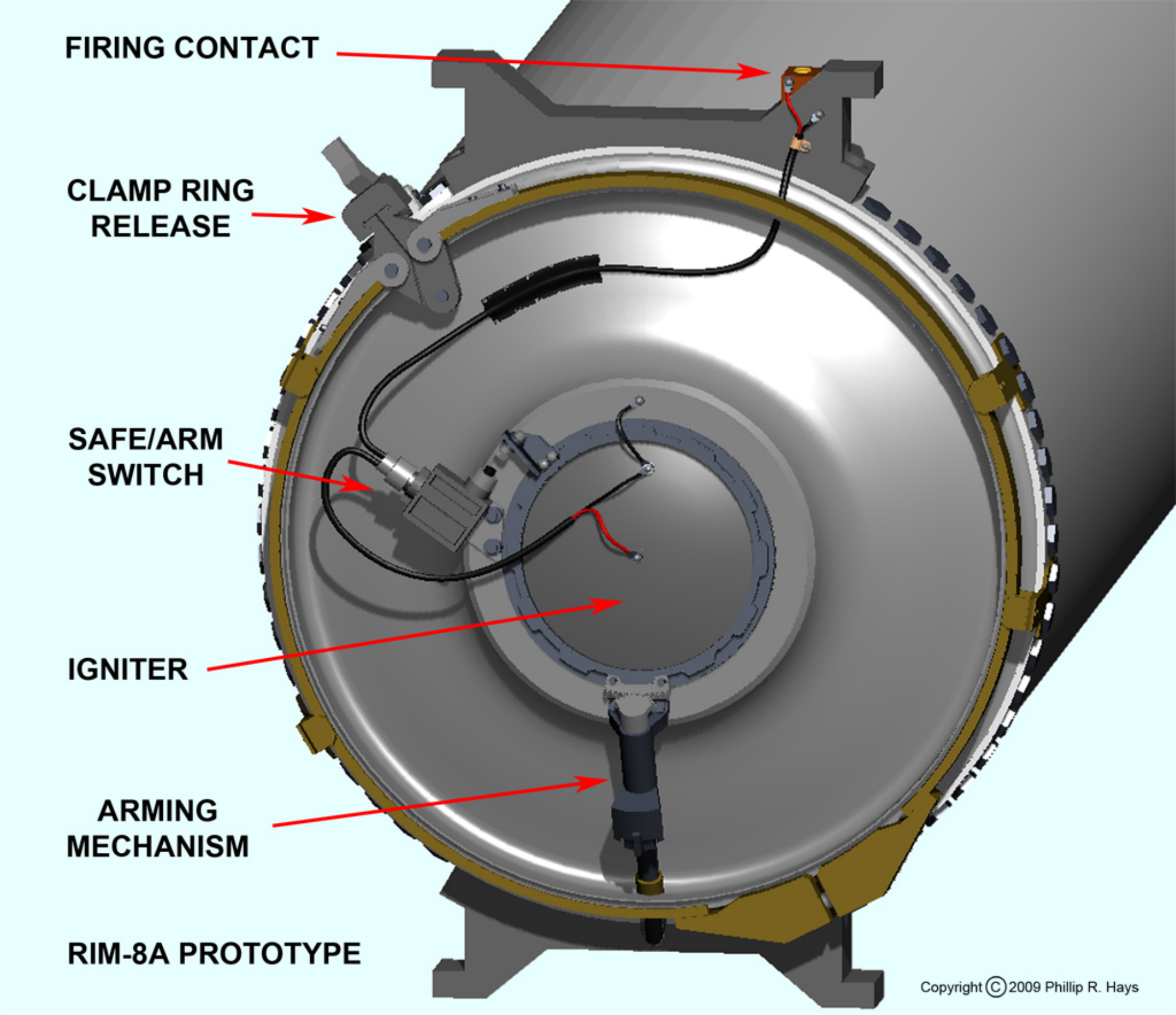
FIRING CONTACT
CLAMP RING RELEASE
SAFE/ARM SWITCH
IGNITER
ARMING MECHANISM
RIM-8A PROTOTYPE
Copyright © 2009 Phillip R. Hays

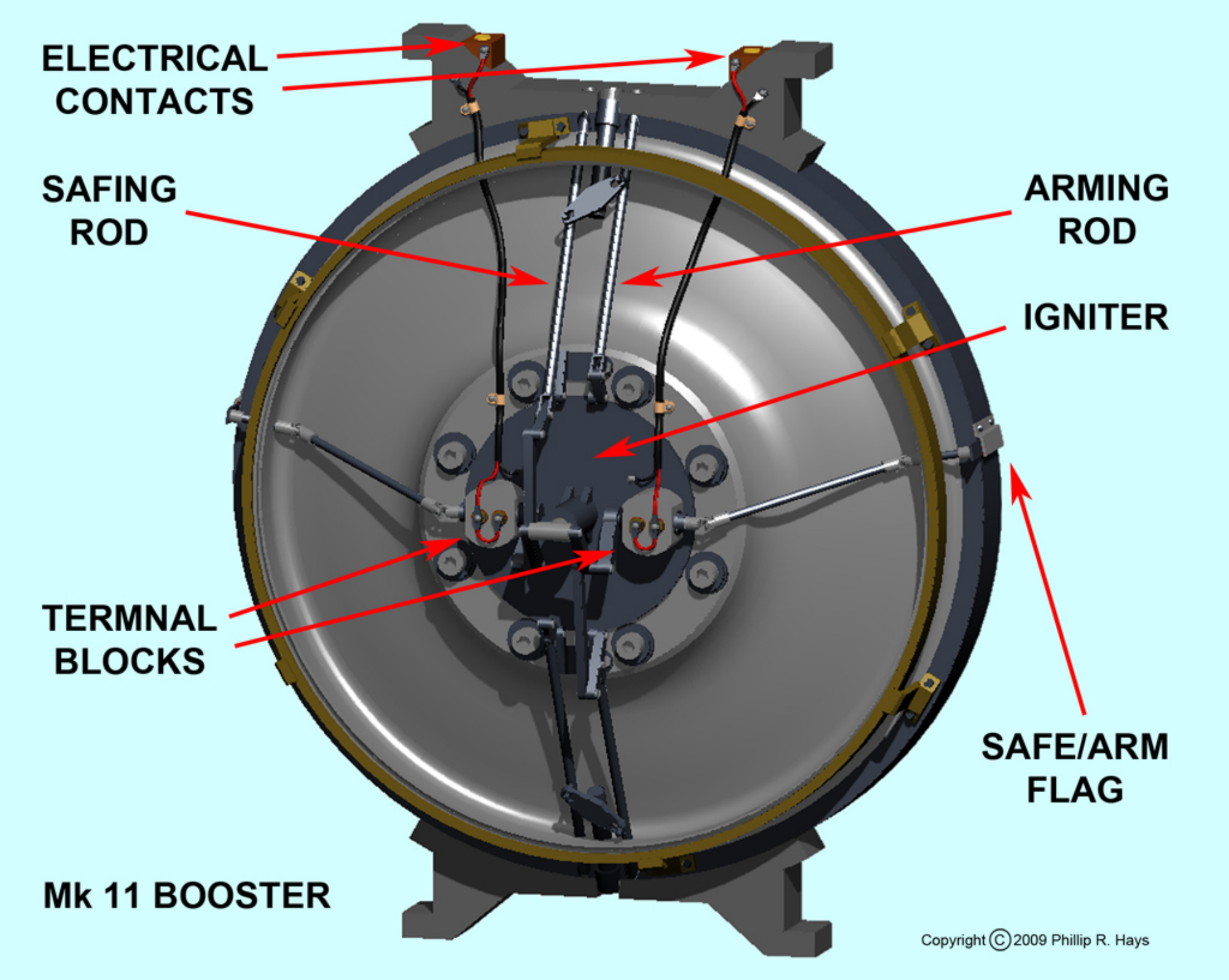

Copyright © 2009 Phillip R. Hays

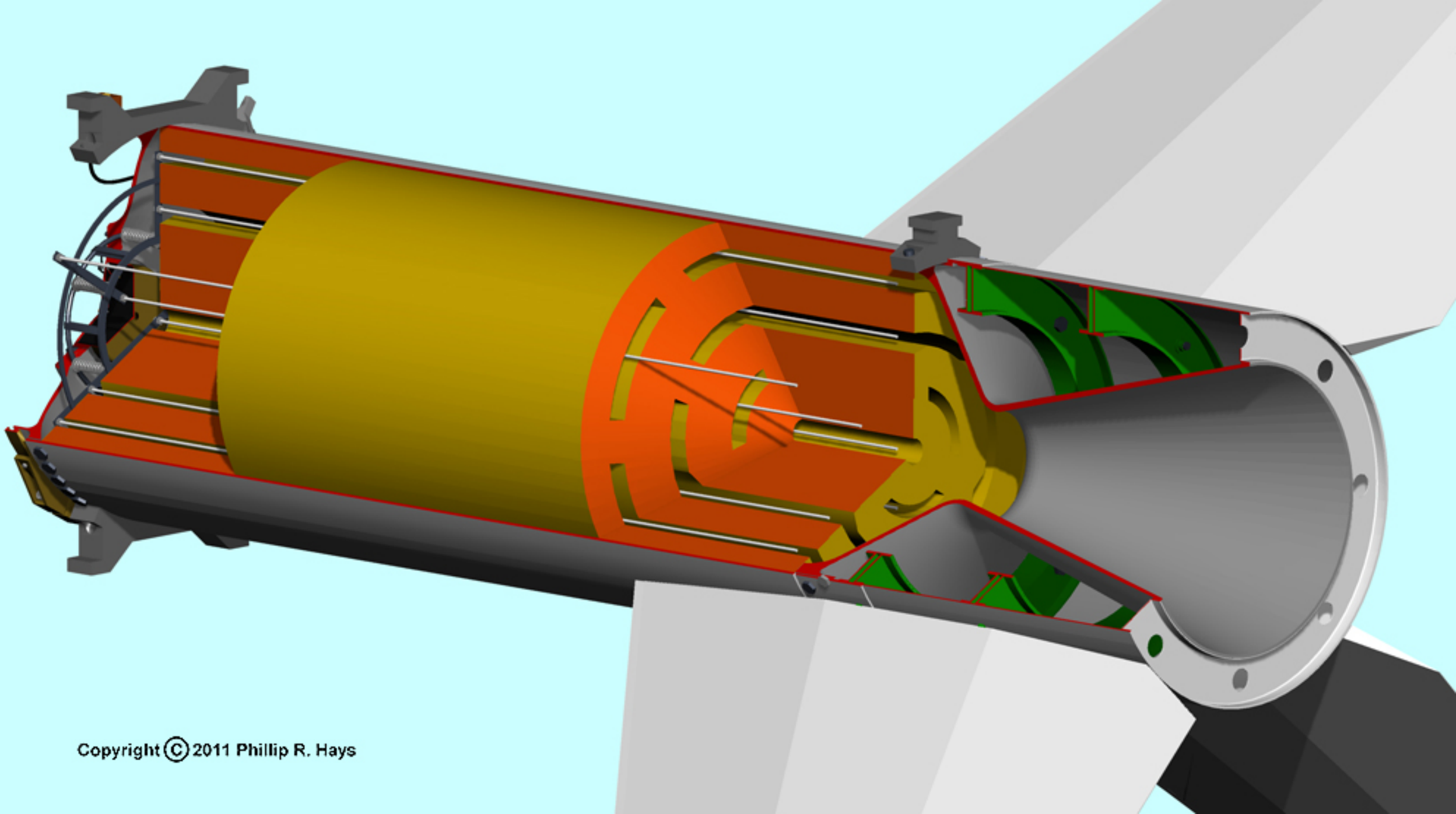

Copyright © 2011 Phillip R. Hays

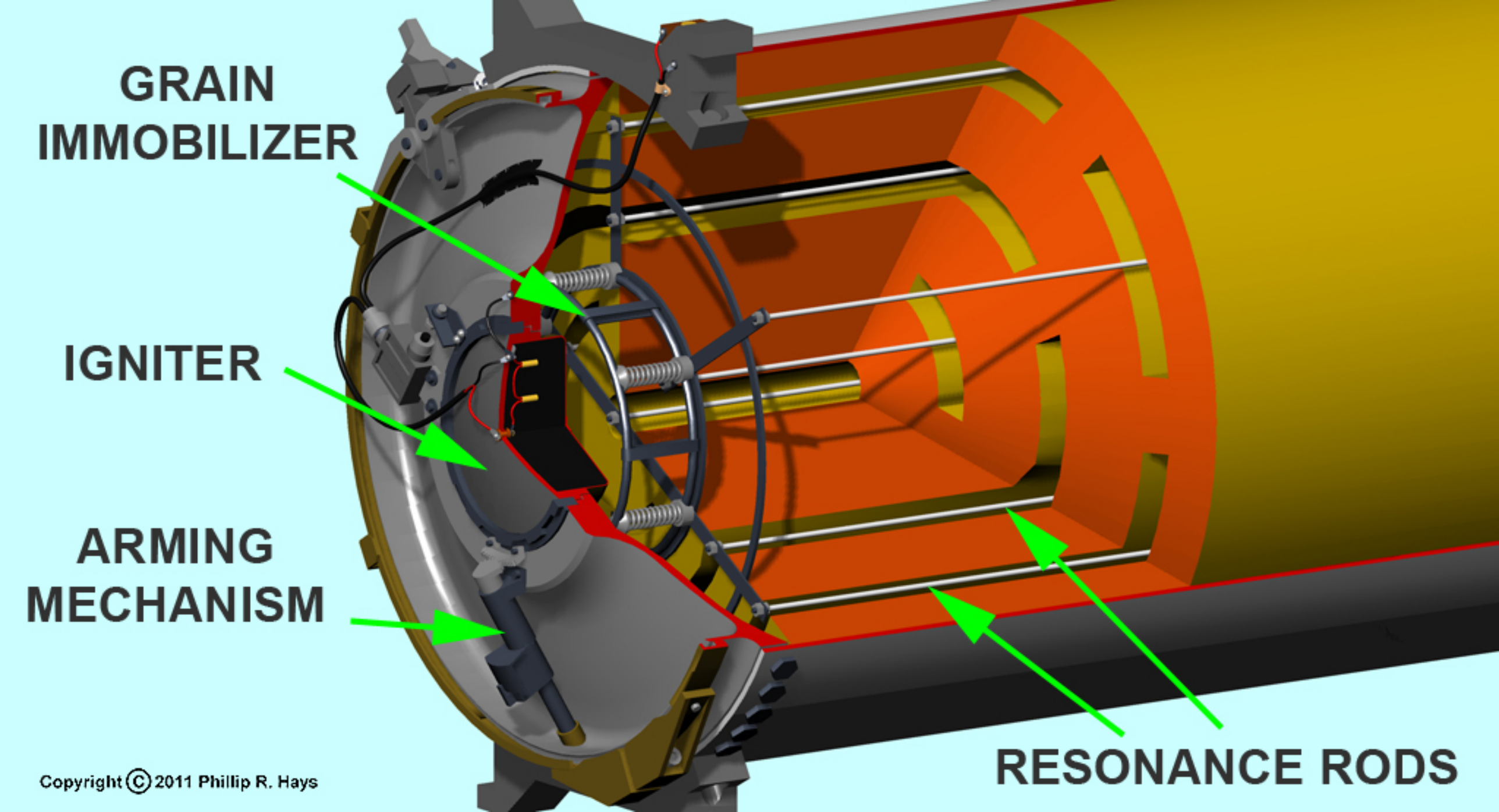

Copyright © 2011 Phillip R. Hays

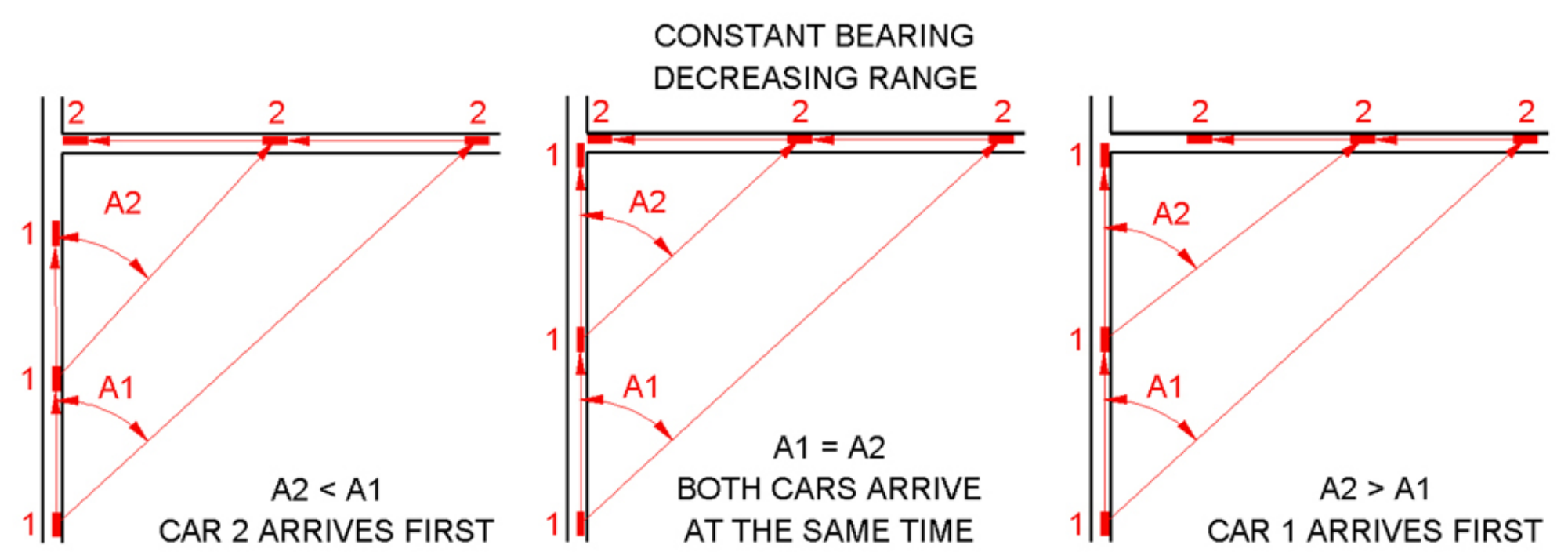

Copyright © 2009 Phillip R. Hays

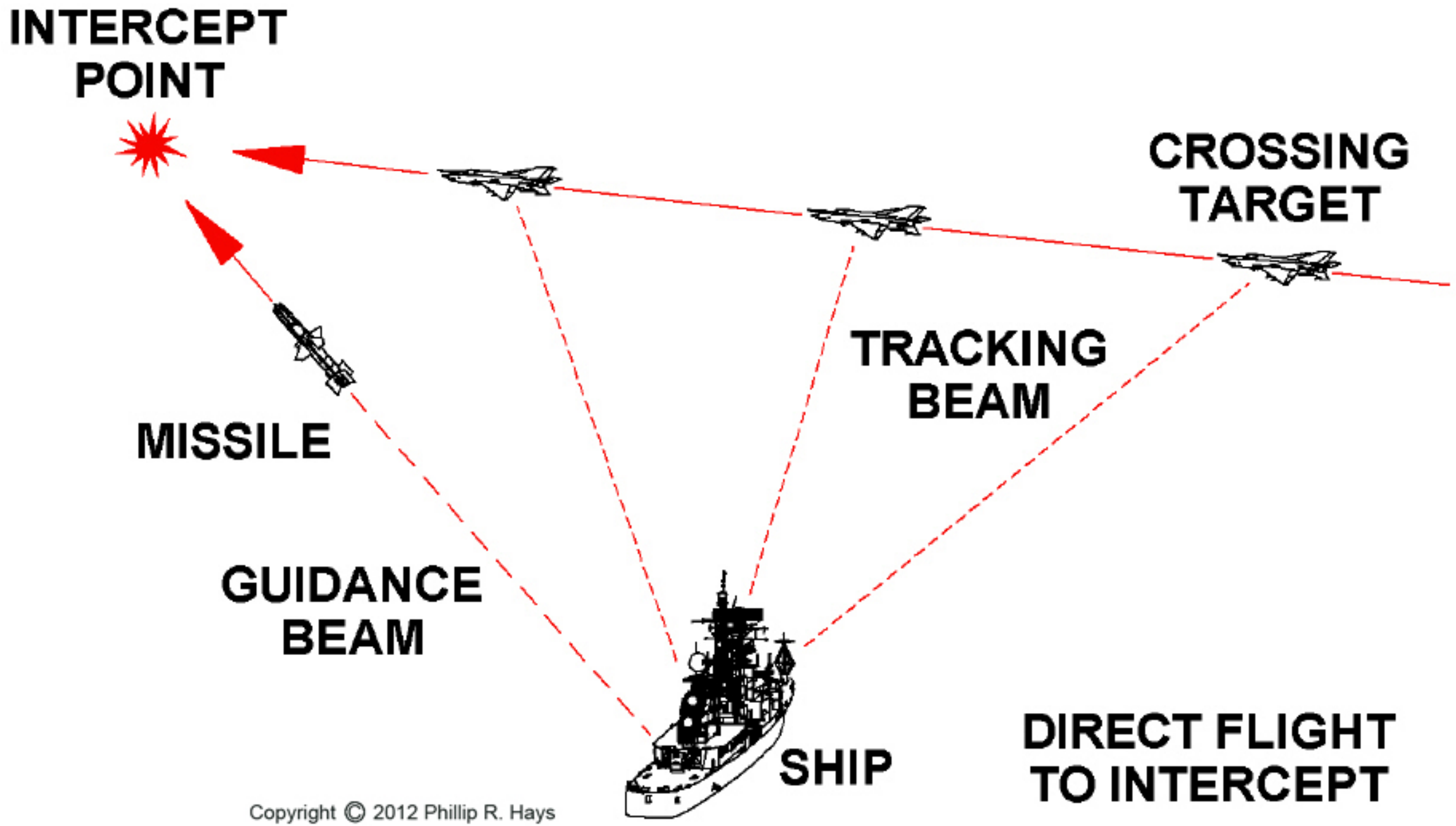

Copyright © 2012 Phillip R. Hays

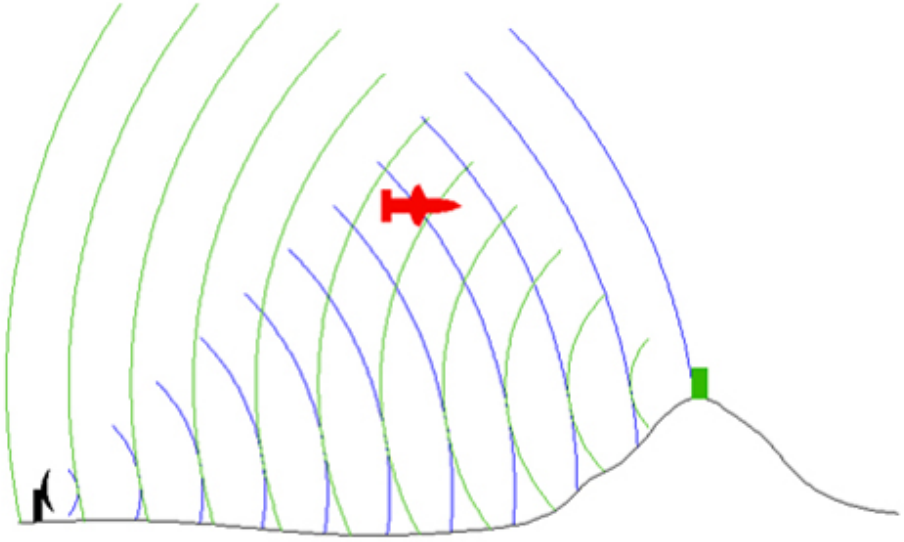

NON-MOVING OBJECT

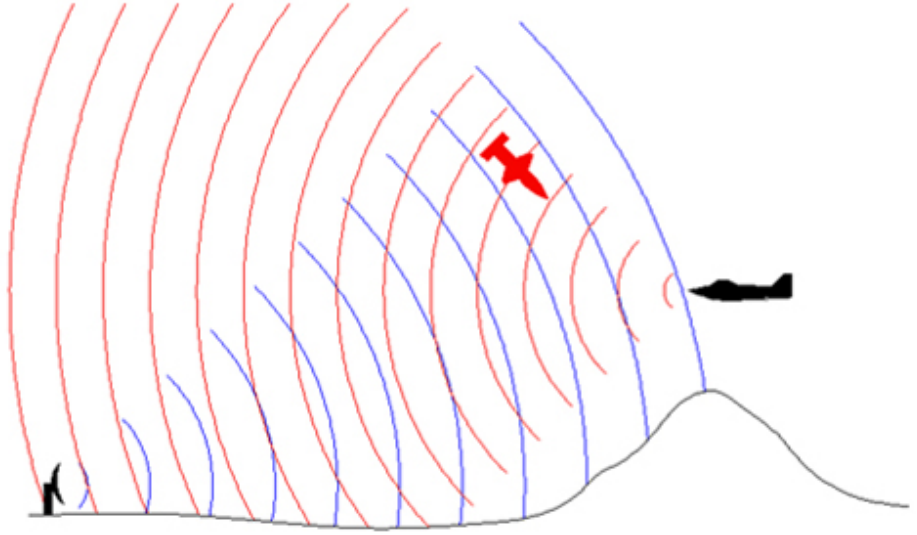

MOVING OBJECT

Copyright © 2009 Phillip R. Hays

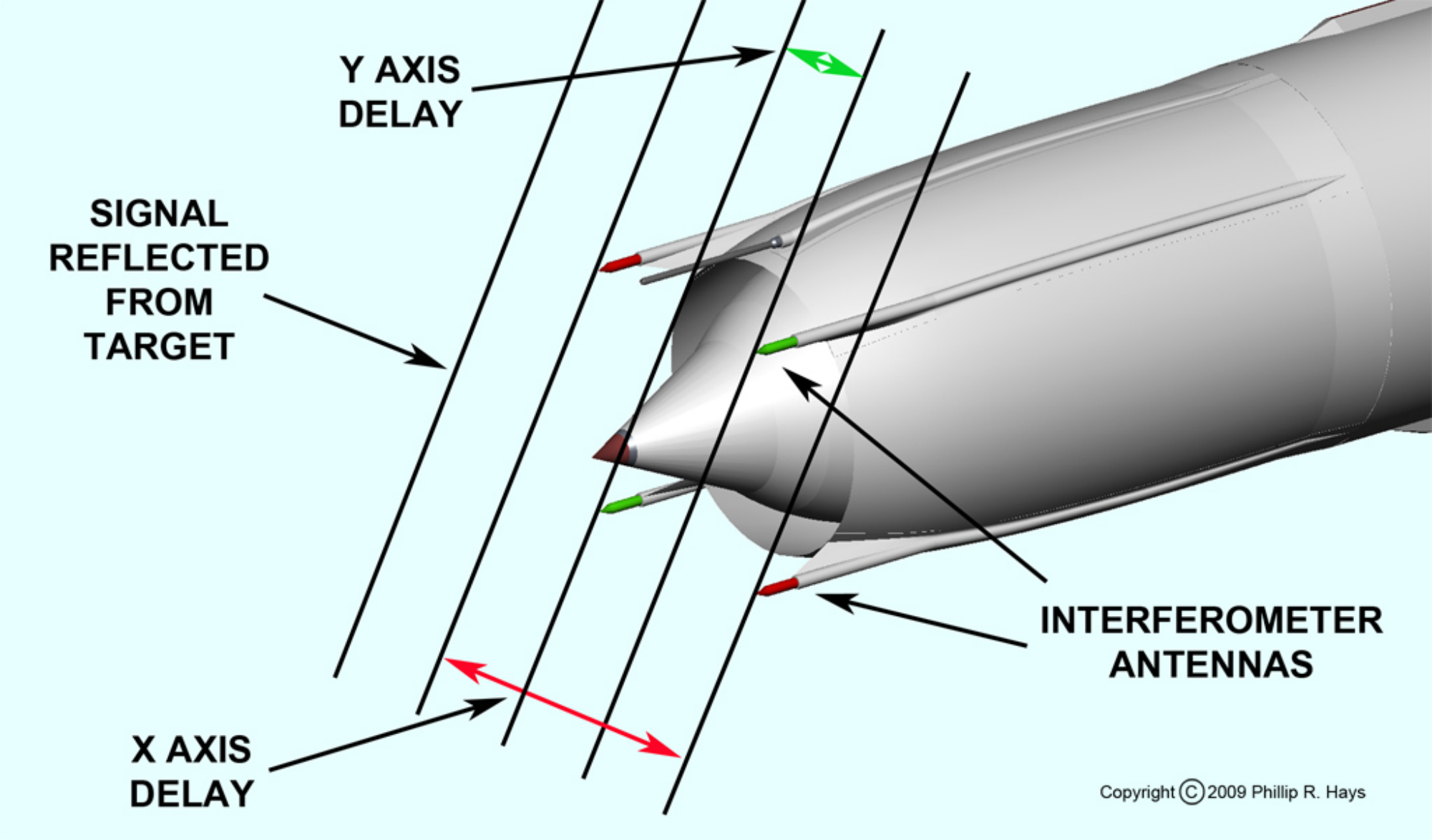

Copyright © 2009 Phillip R. Hays

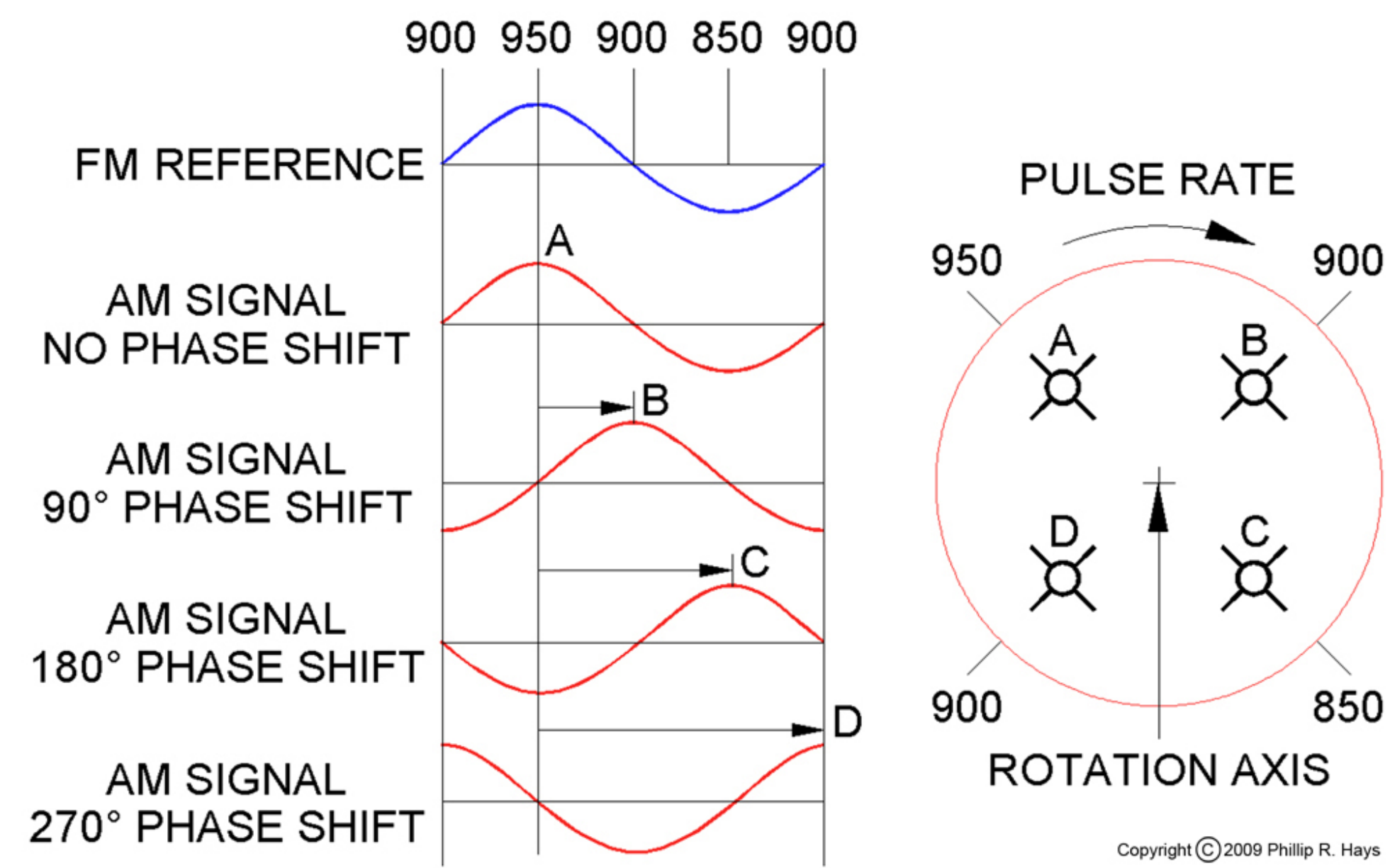

Copyright © 2009 Phillip R. Hays

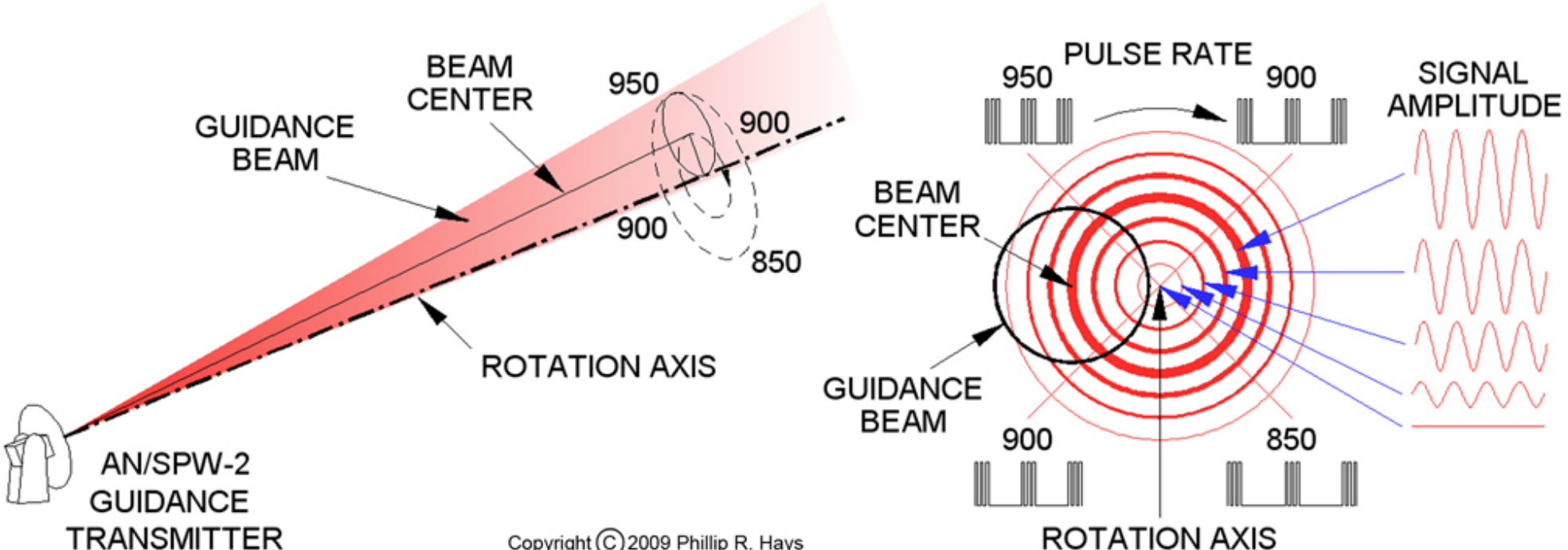

Copyright © 2009 Phillip R. Hays

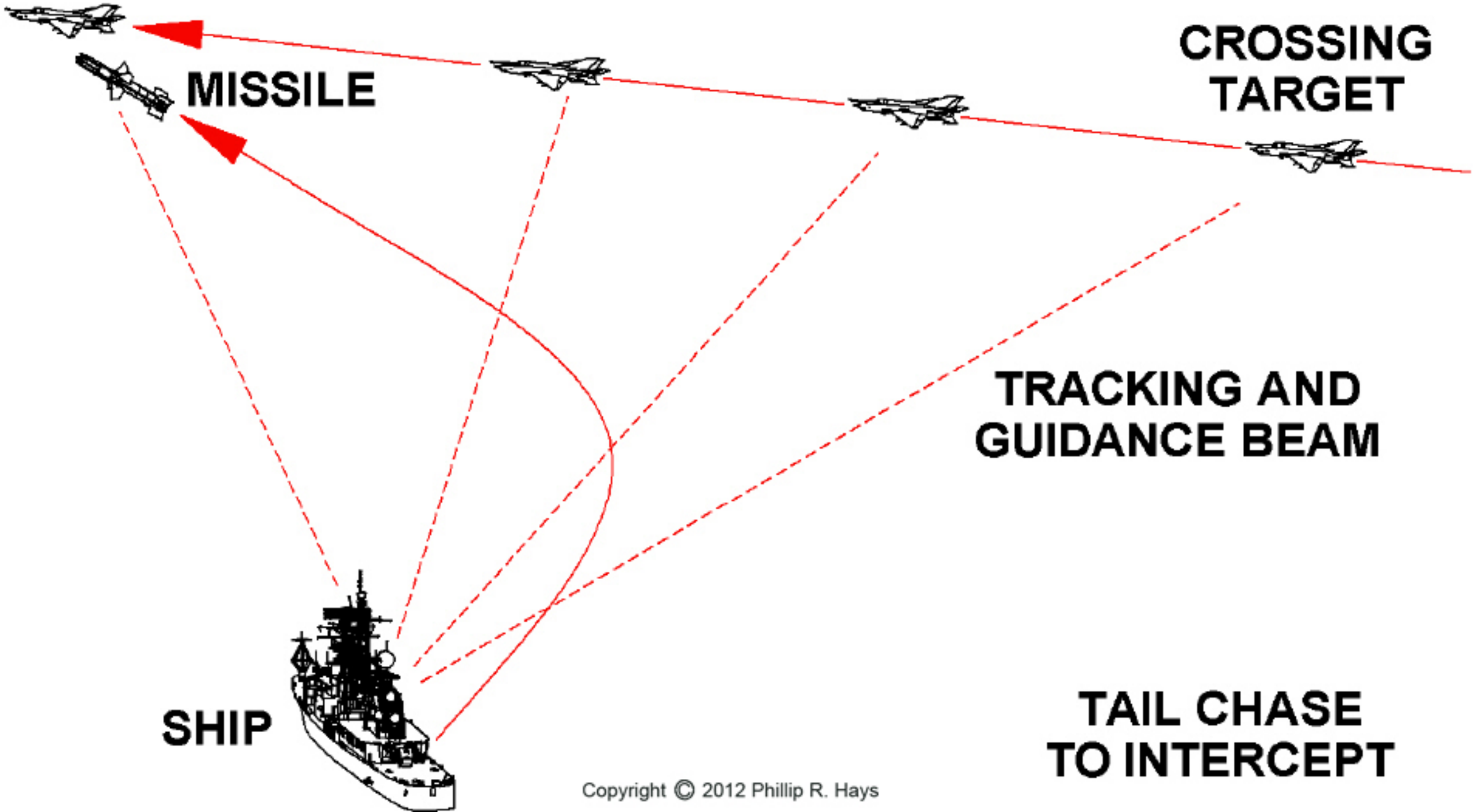

Copyright © 2012 Phillip R. Hays

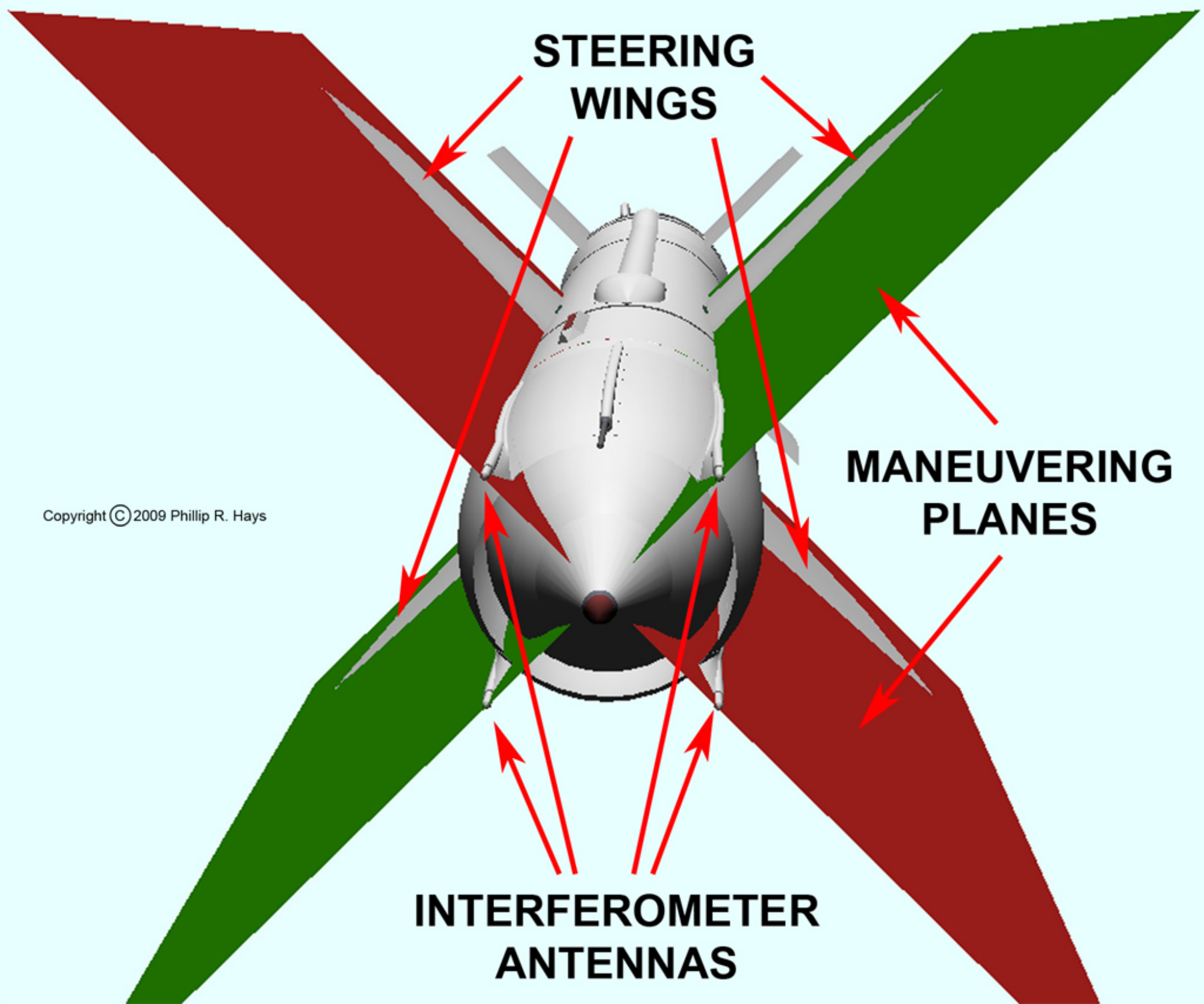

Copyright © 2009 Phillip R. Hays

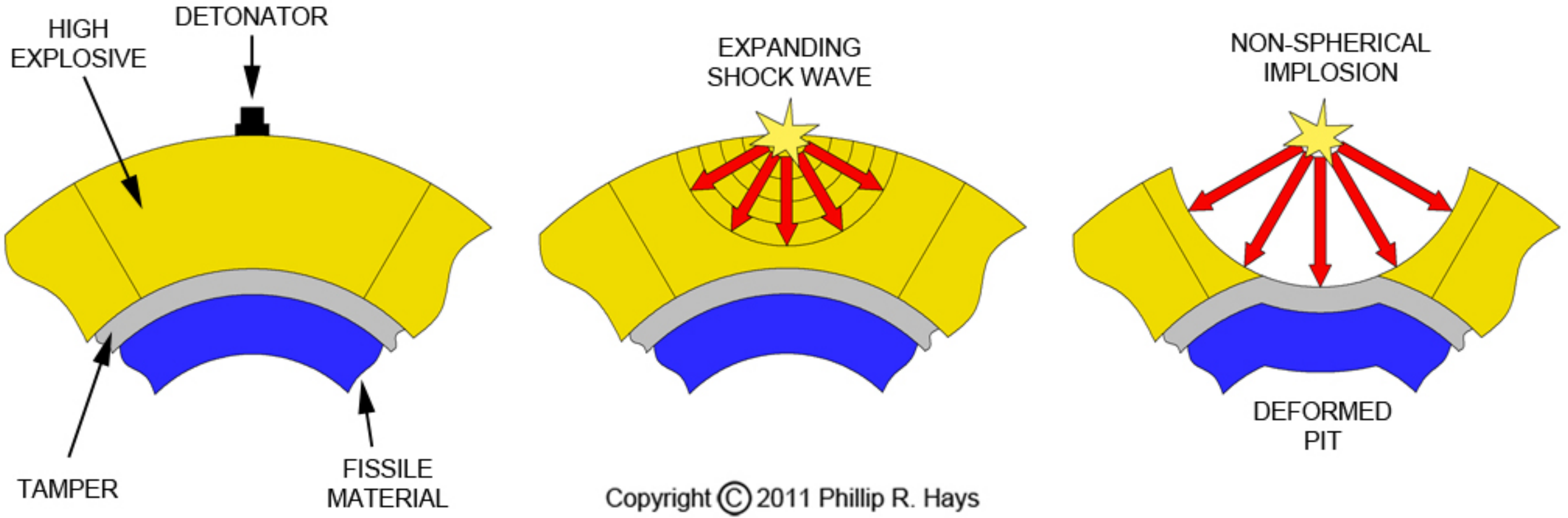

Copyright © 2011 Phillip R. Hays

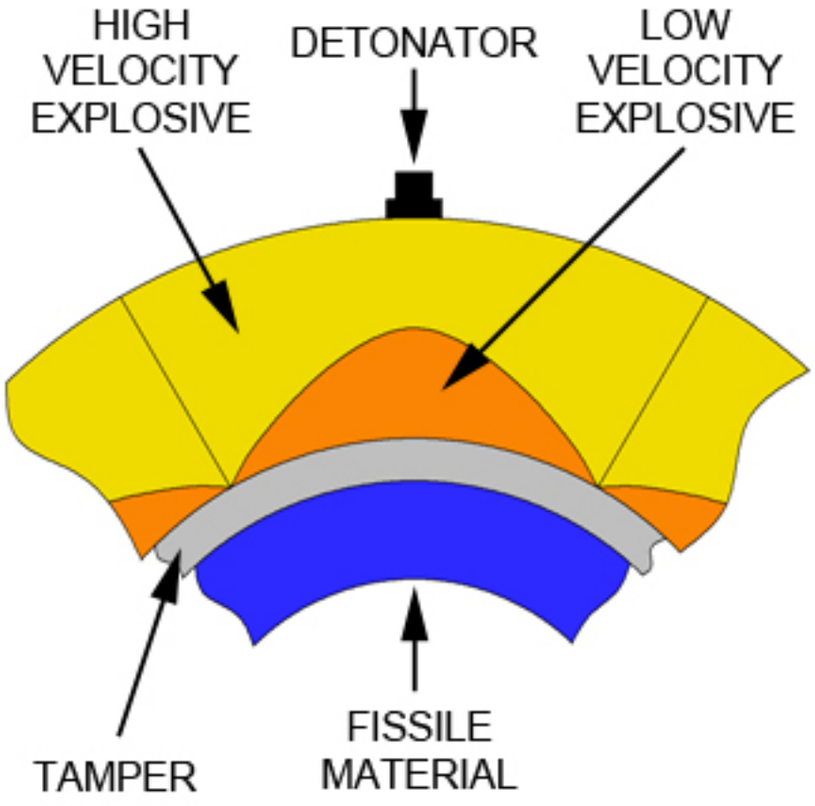

BURN TIME IS THE SAME FOR ALL PATHS FROM THE DETONATOR

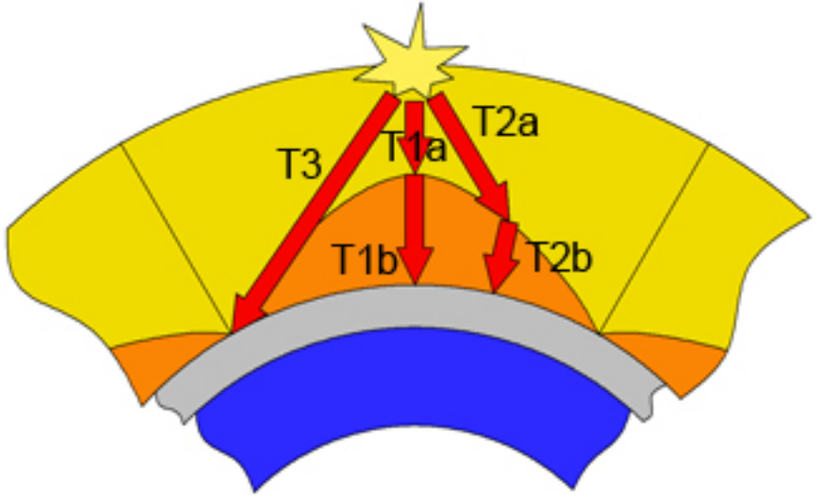

$T1a + T1b = T2a + T2b = T3$

Copyright © 2011 Phillip R. Hays

EQUAL FORCES ALL AROUND

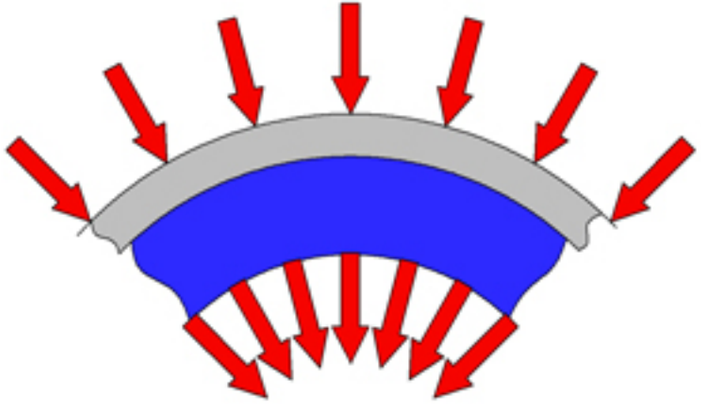

SPHERICAL IMPLOSION

Copyright © 2011 Phillip R. Hays

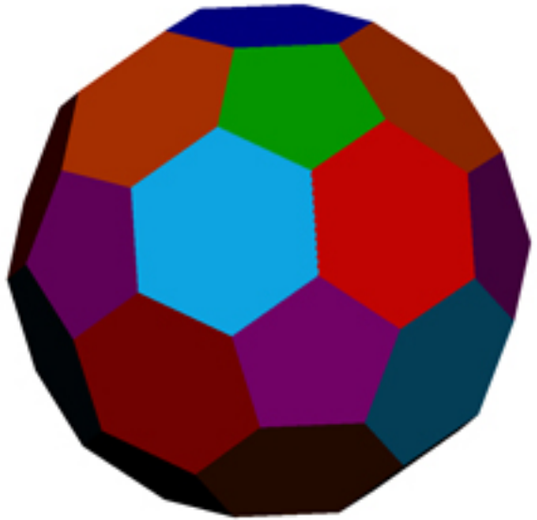

SOCCER
BALL
PATTERN

PENTAGONAL LENS

HEXAGONAL LENS

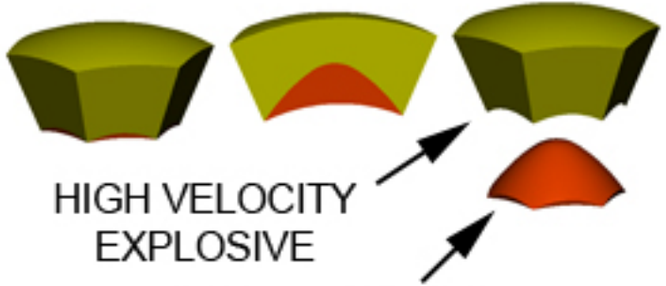

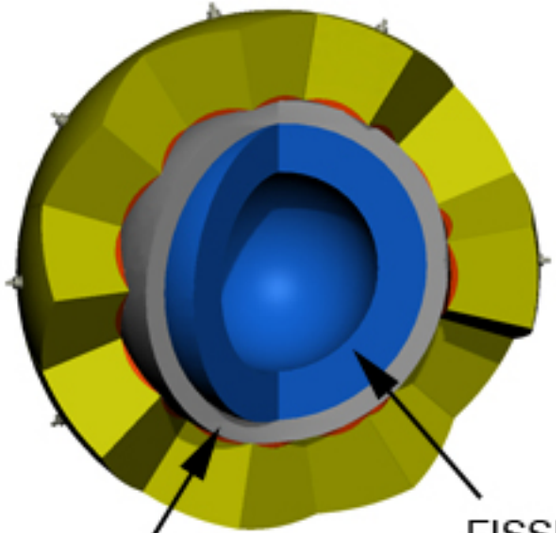

HIGH EXPLOSIVE
LENS SYSTEM

DETONATORS

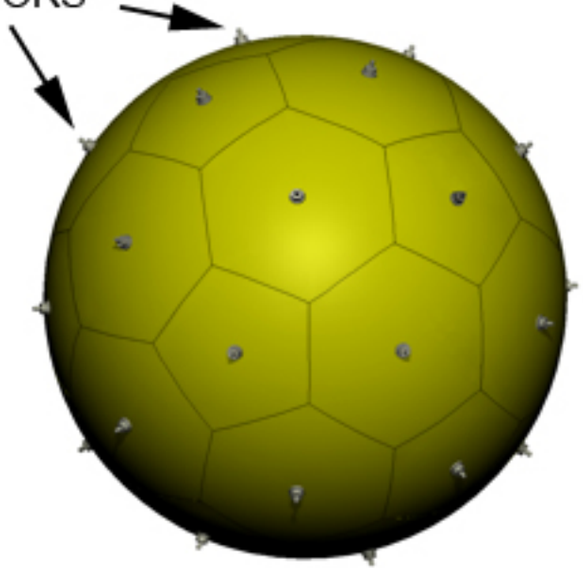

PHYSICS
PACKAGE

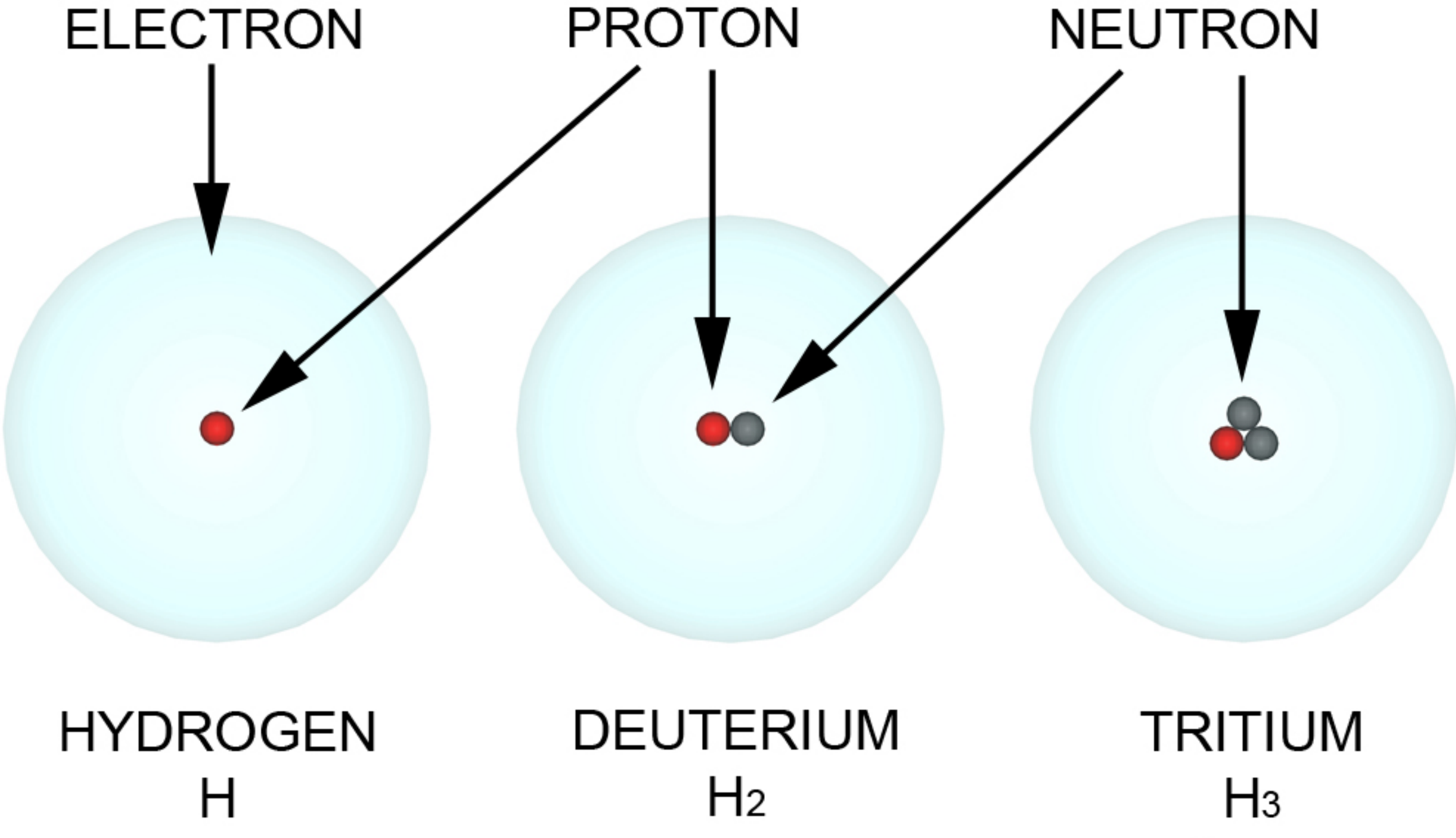

Copyright © 2011 Phillip R. Hays

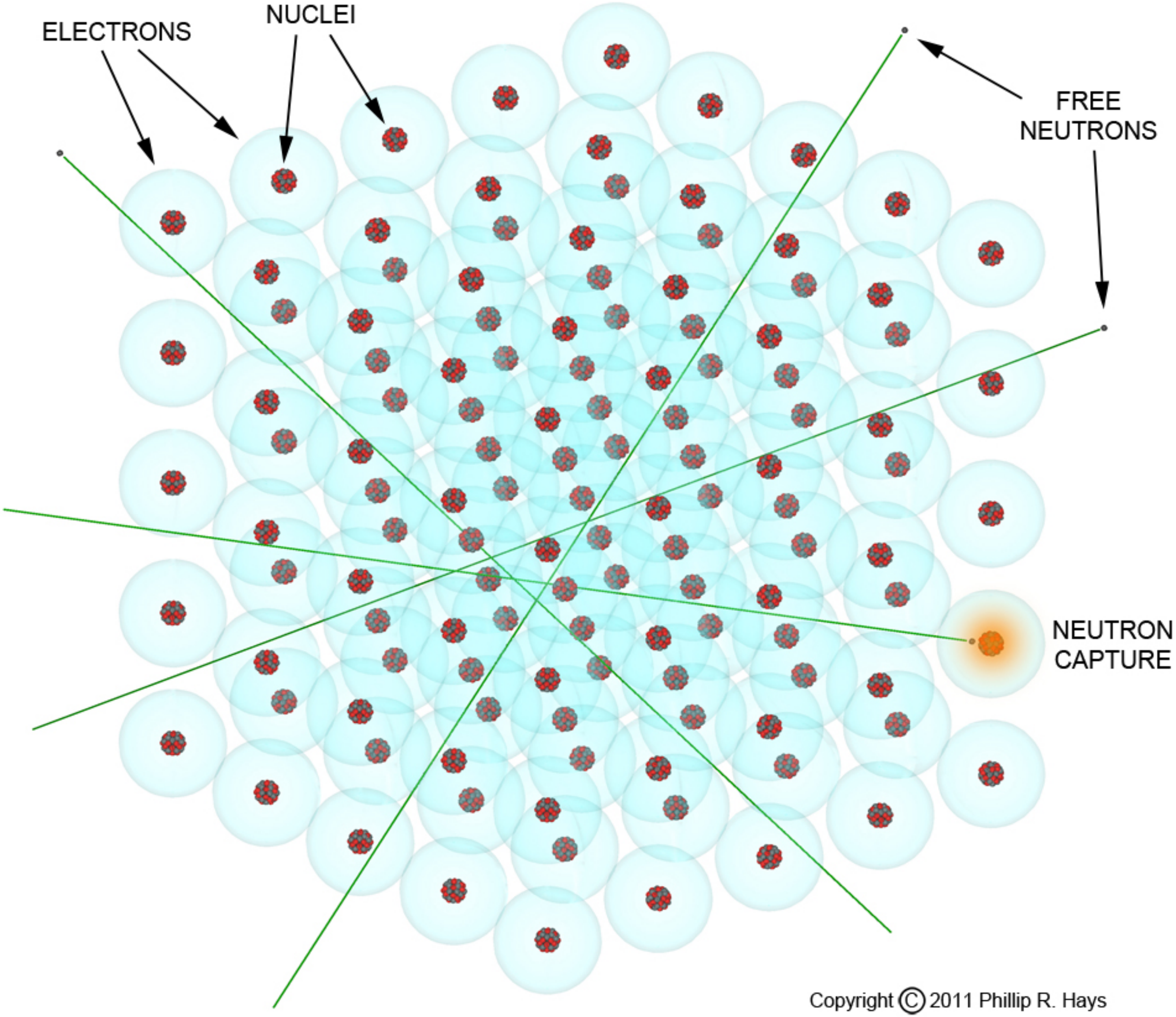

Copyright © 2011 Phillip R. Hays

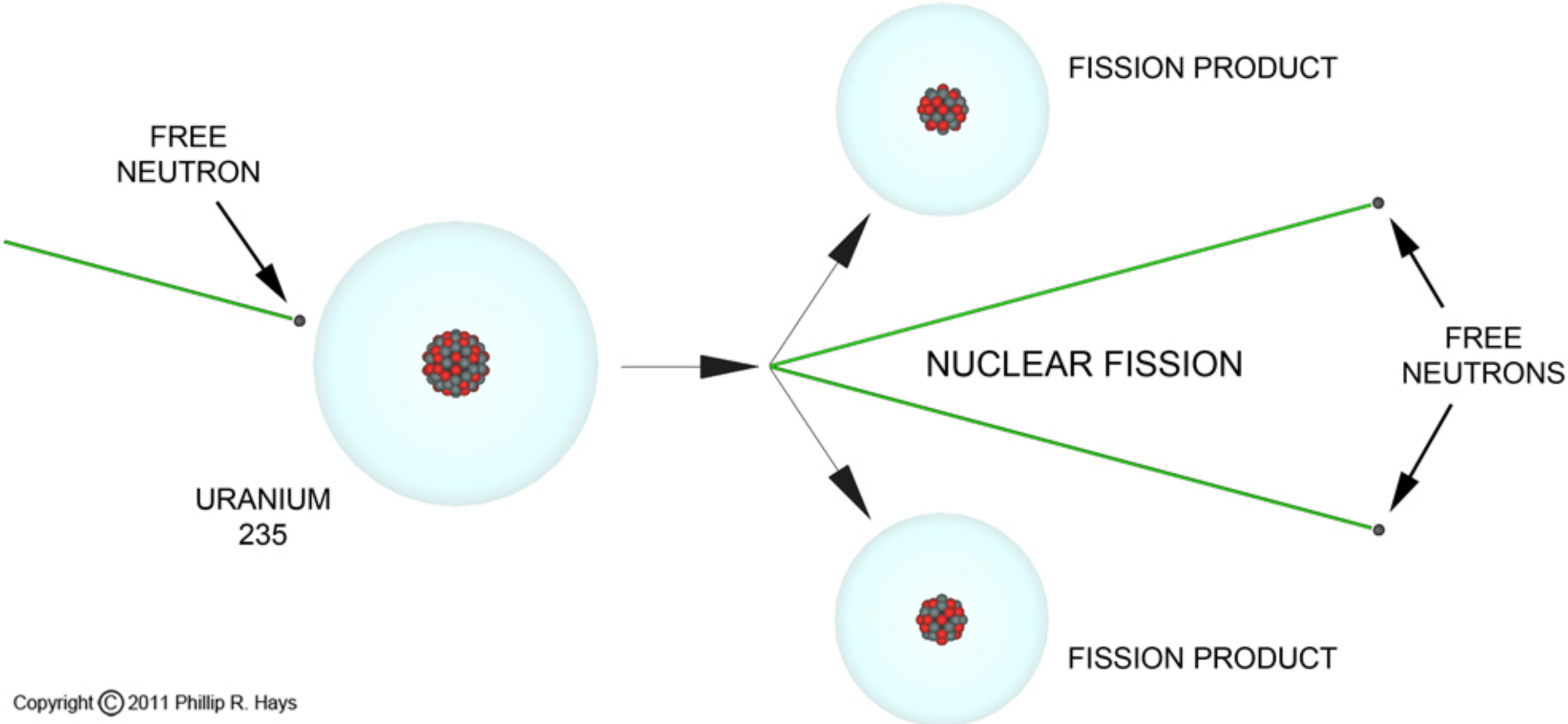

Copyright © 2011 Phillip R. Hays

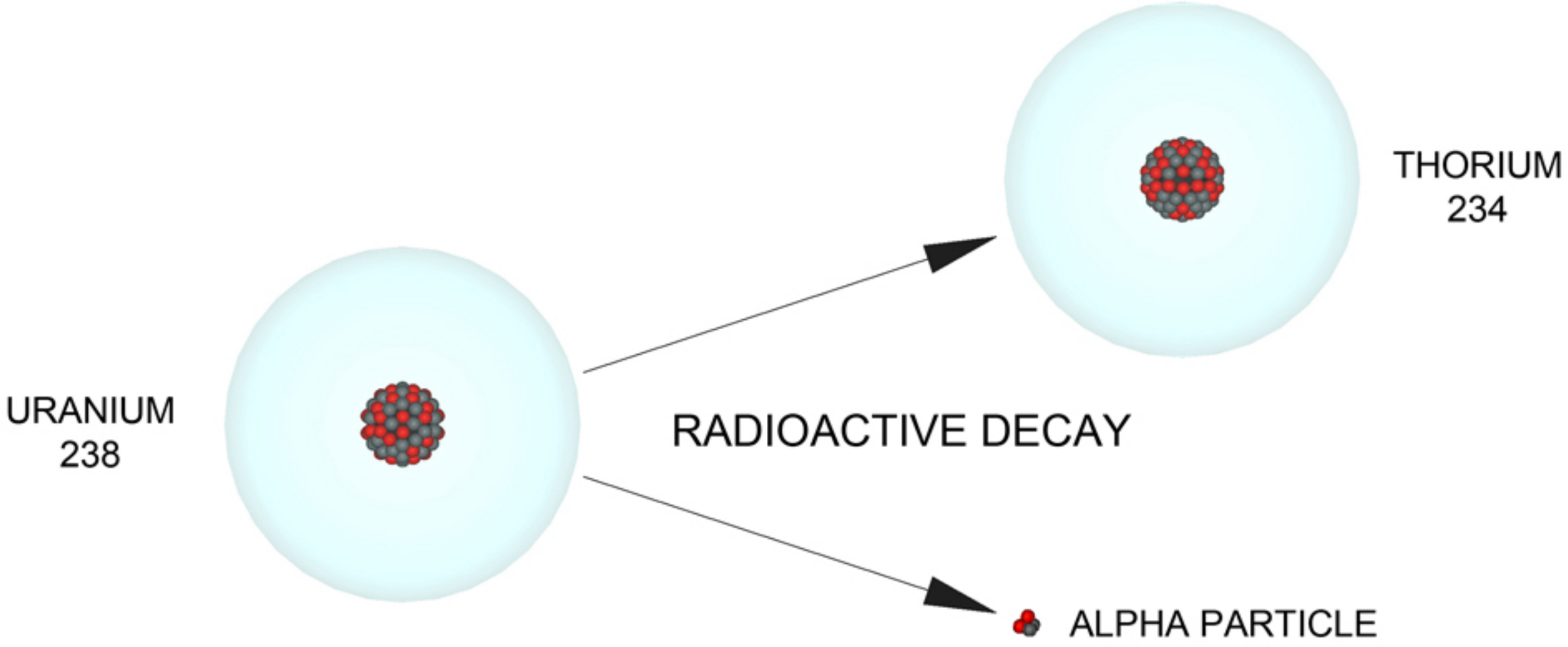

Copyright © 2011 Phillip R. Hays

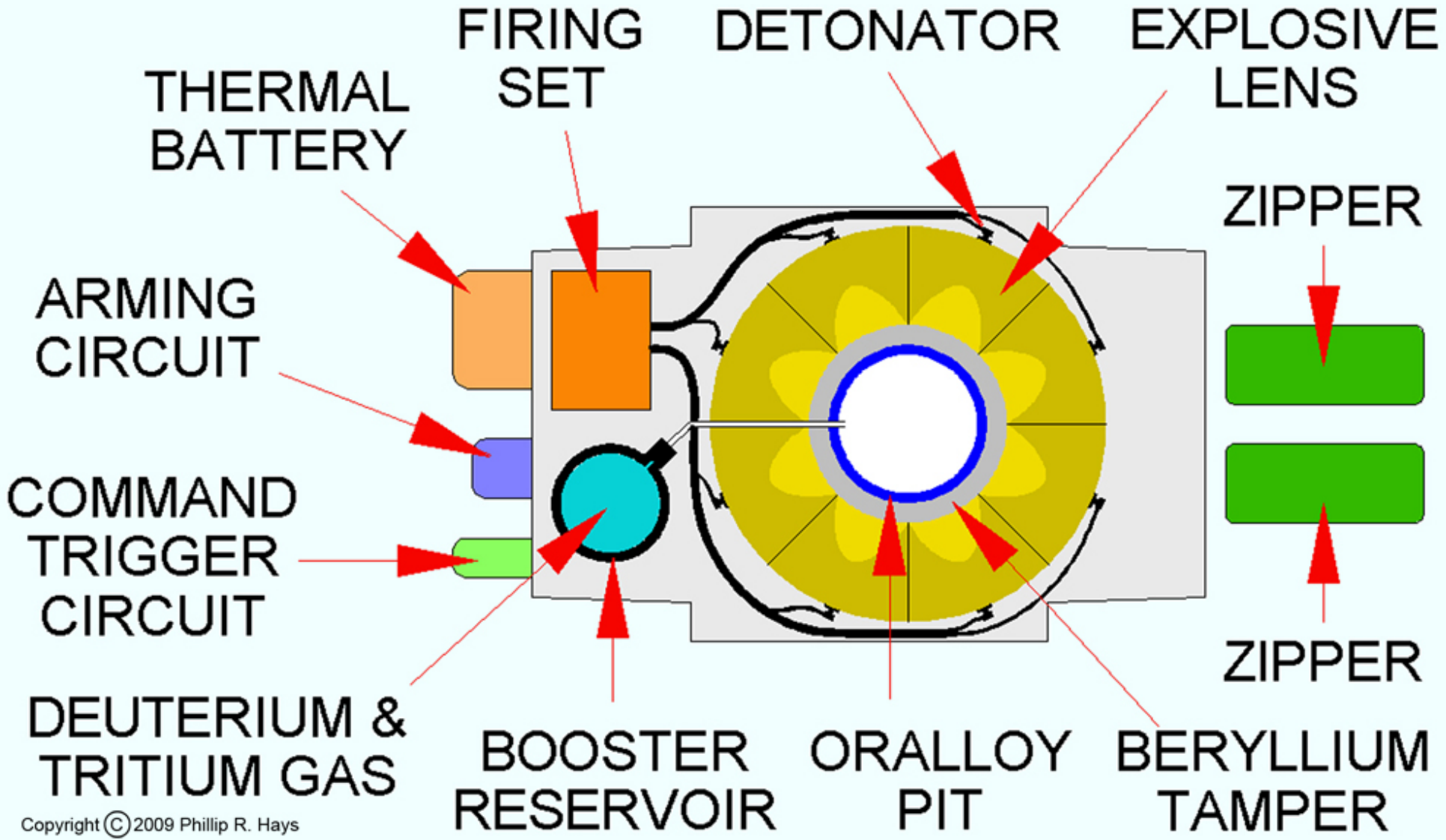

Copyright © 2009 Phillip R. Hays

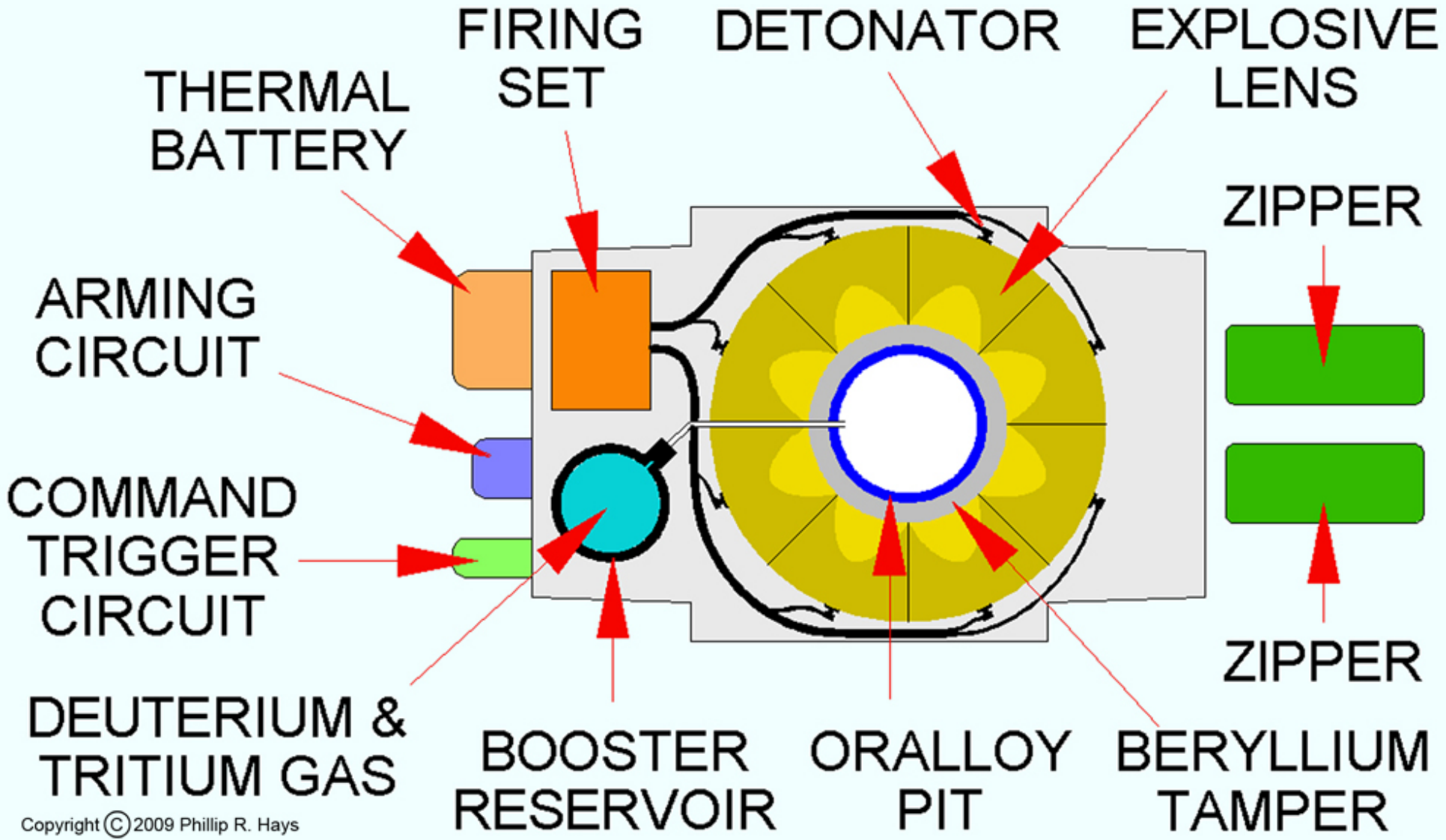

Copyright © 2009 Phillip R. Hays

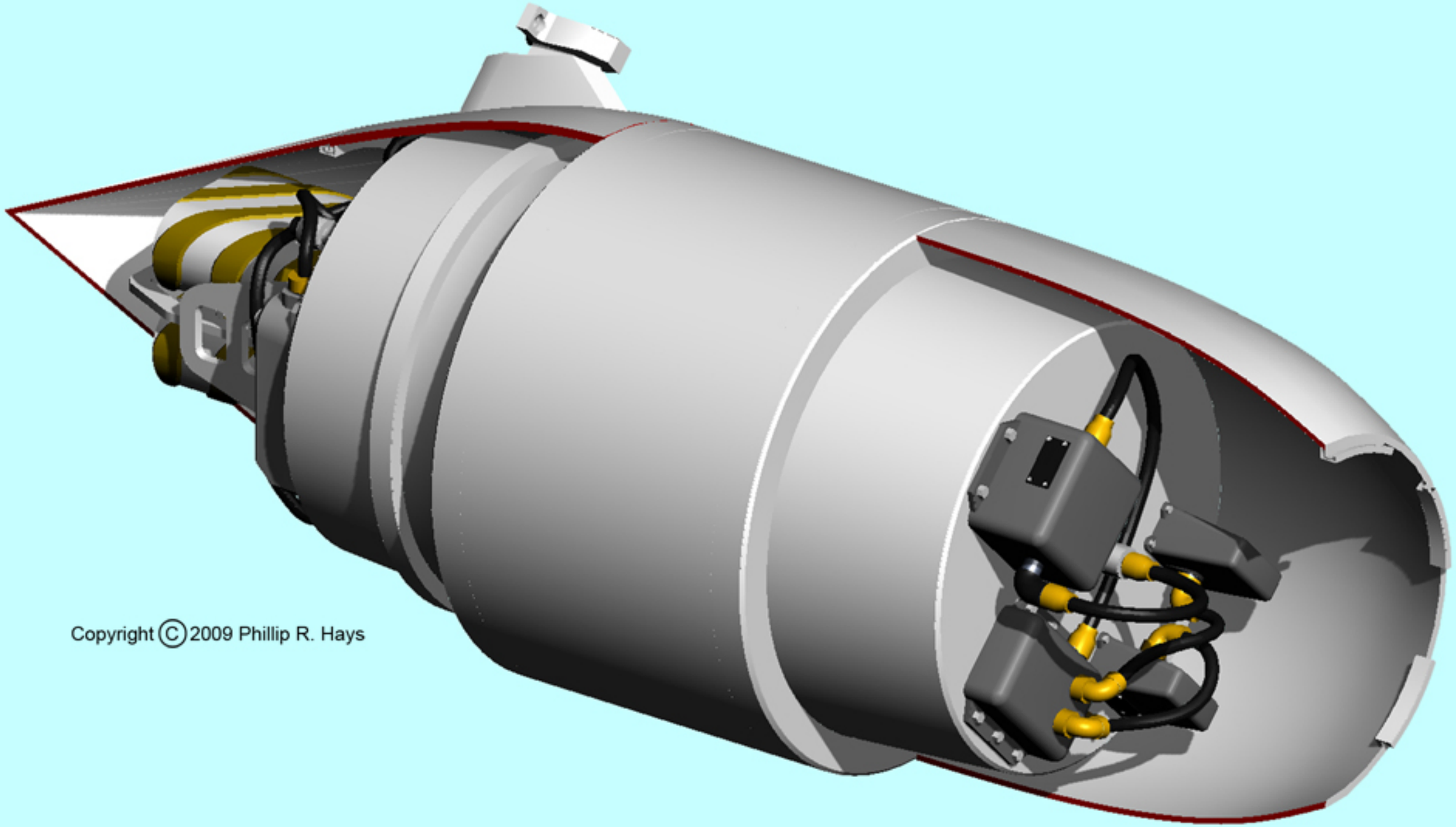
Copyright © 2009 Phillip R. Hays

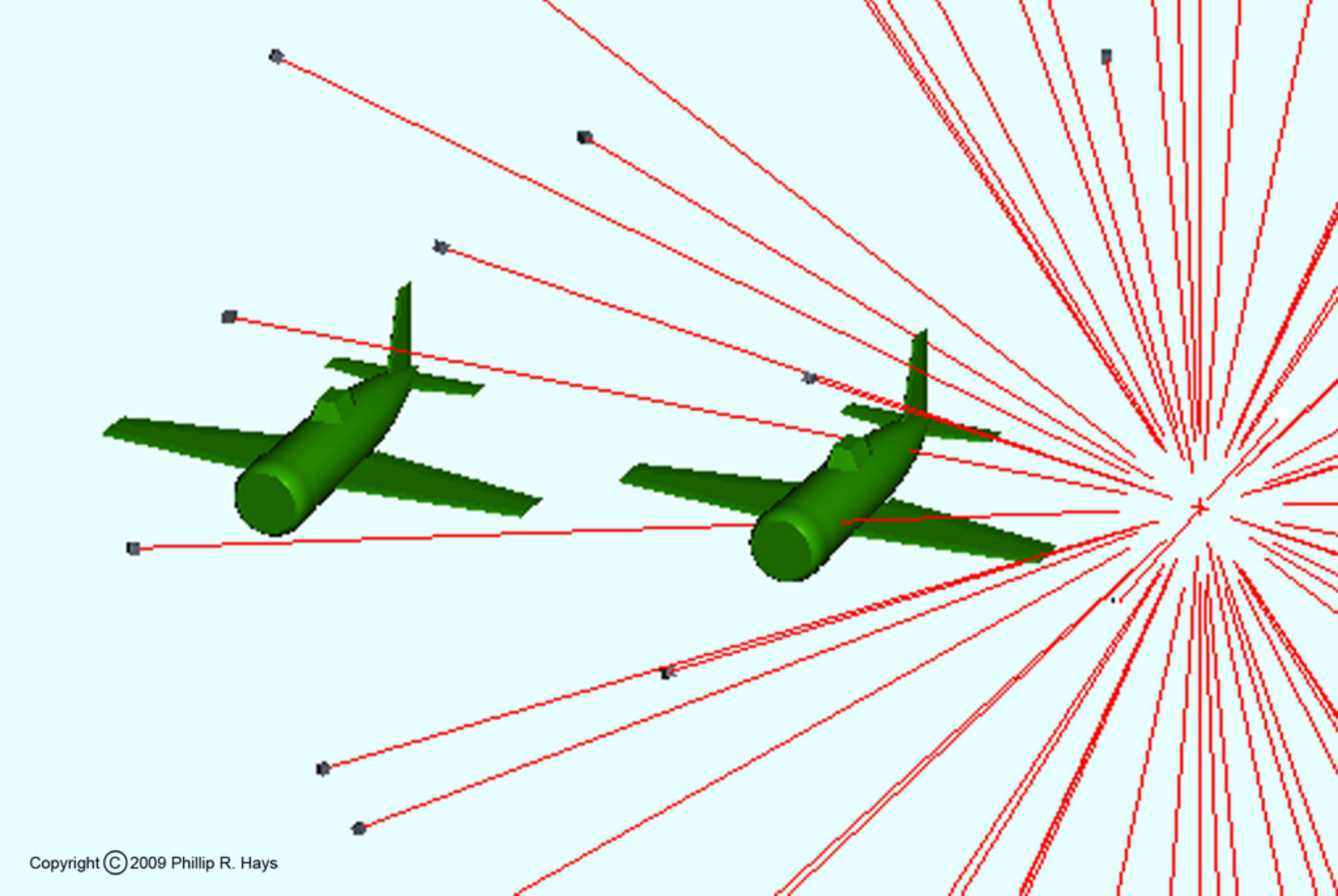
Copyright © 2009 Phillip R. Hays

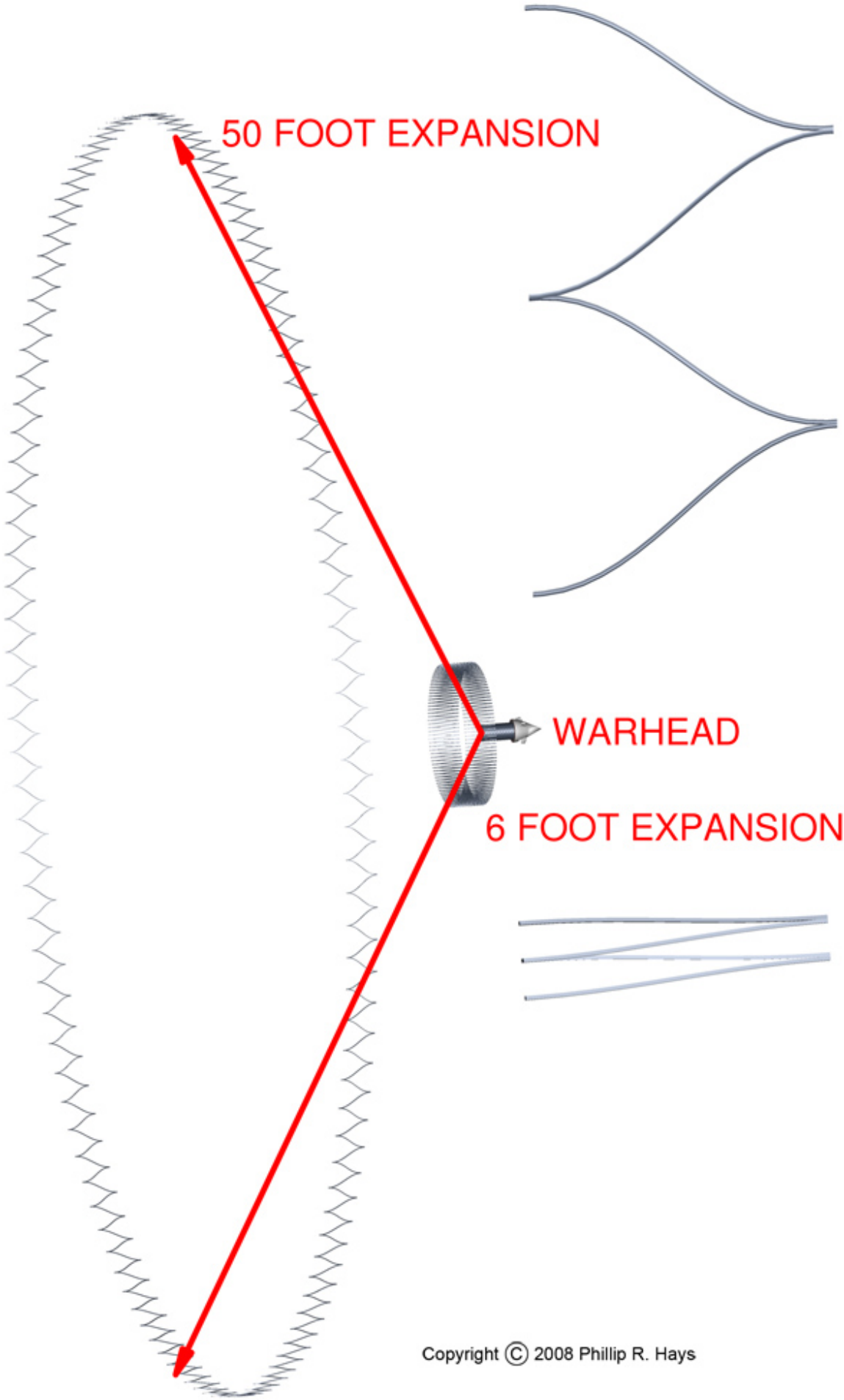

Copyright © 2008 Phillip R. Hays

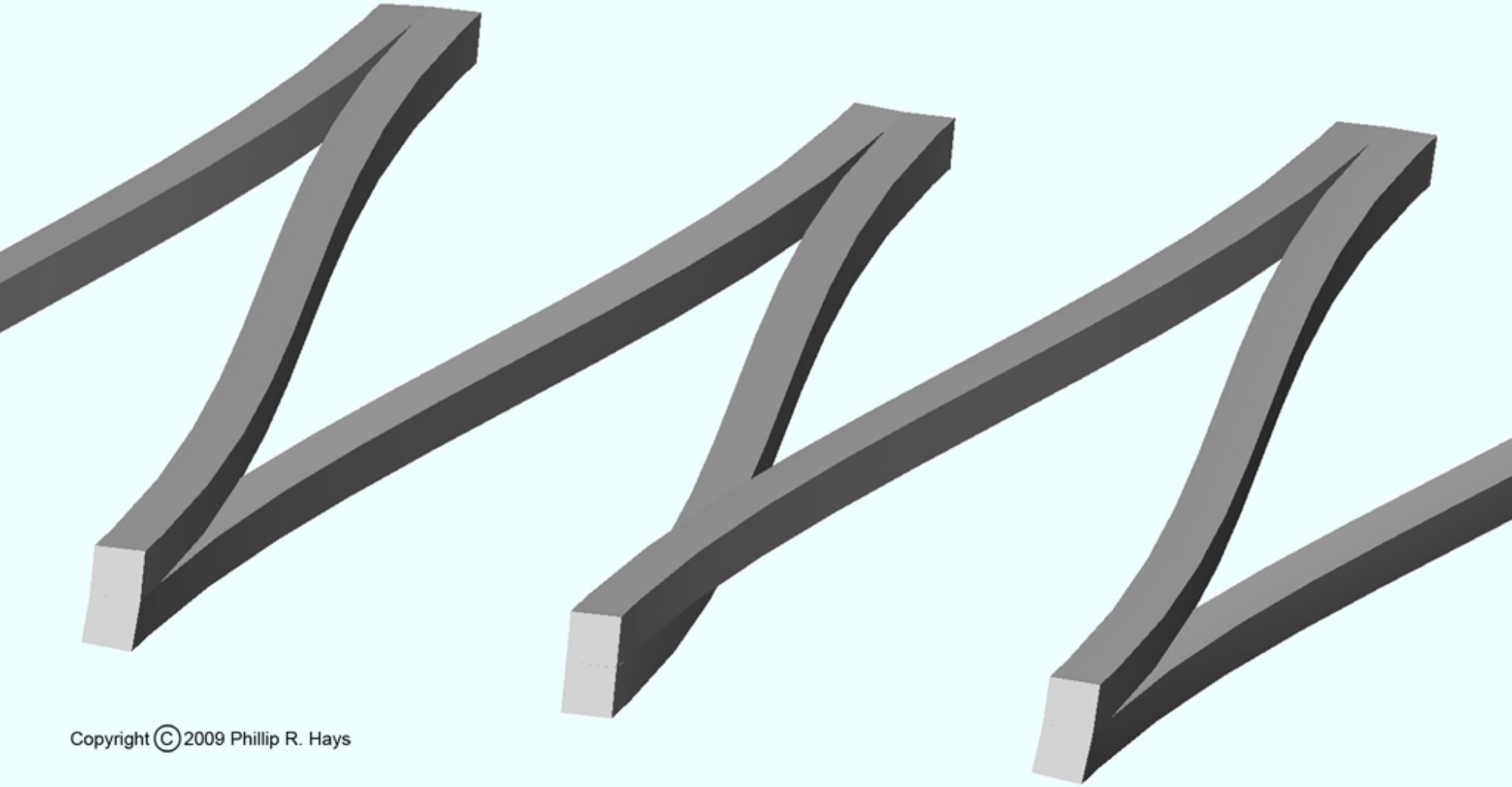

Copyright © 2009 Phillip R. Hays

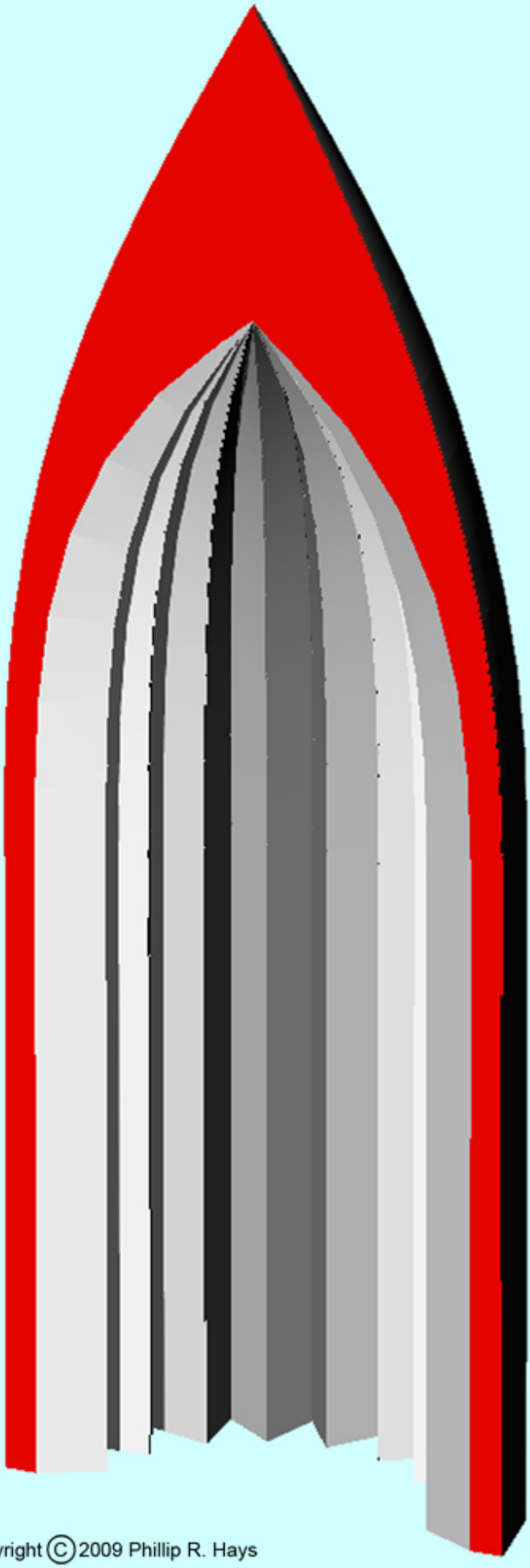

Copyright © 2009 Phillip R. Hays

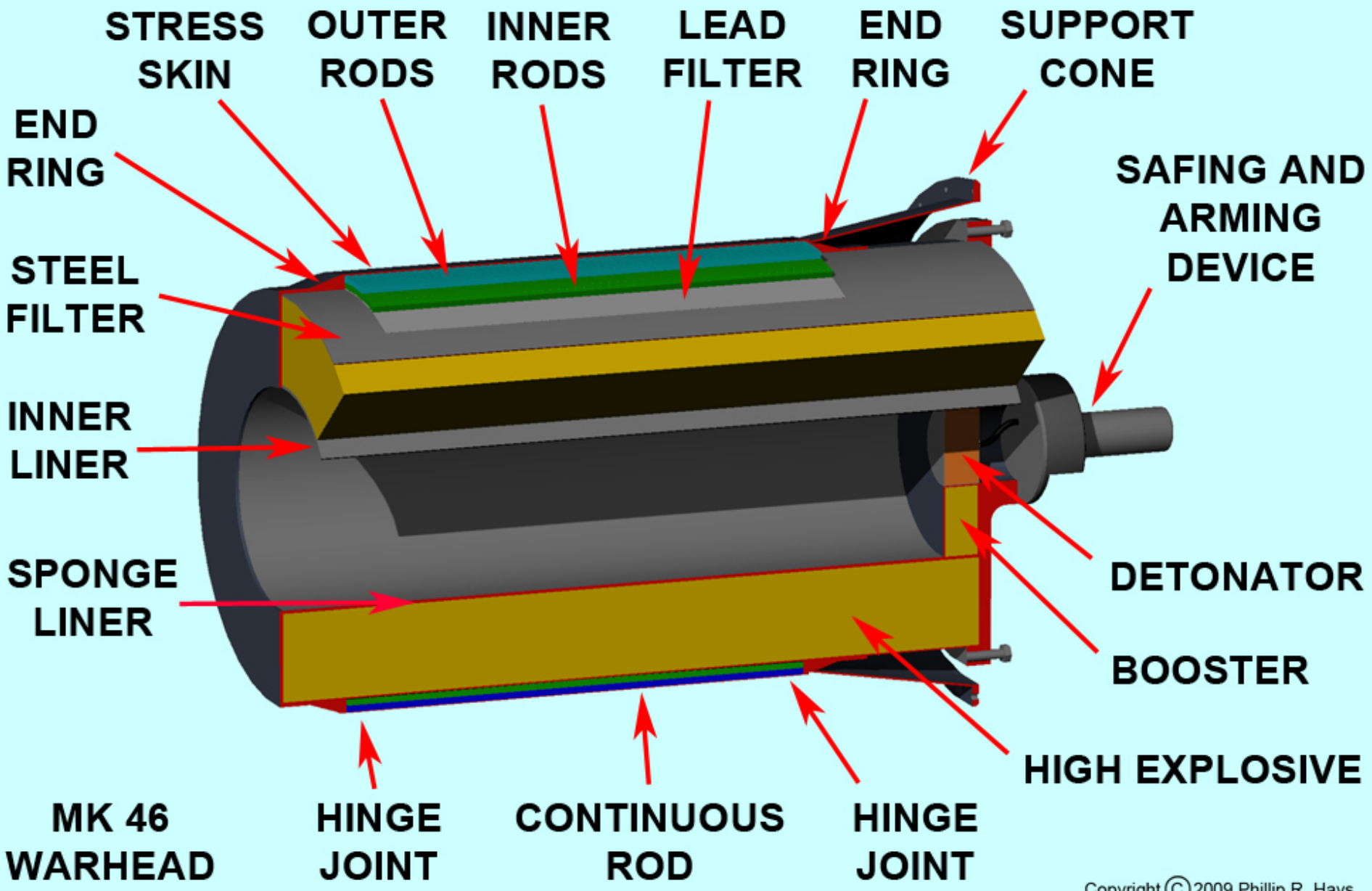

Copyright © 2009 Phillip R. Hays

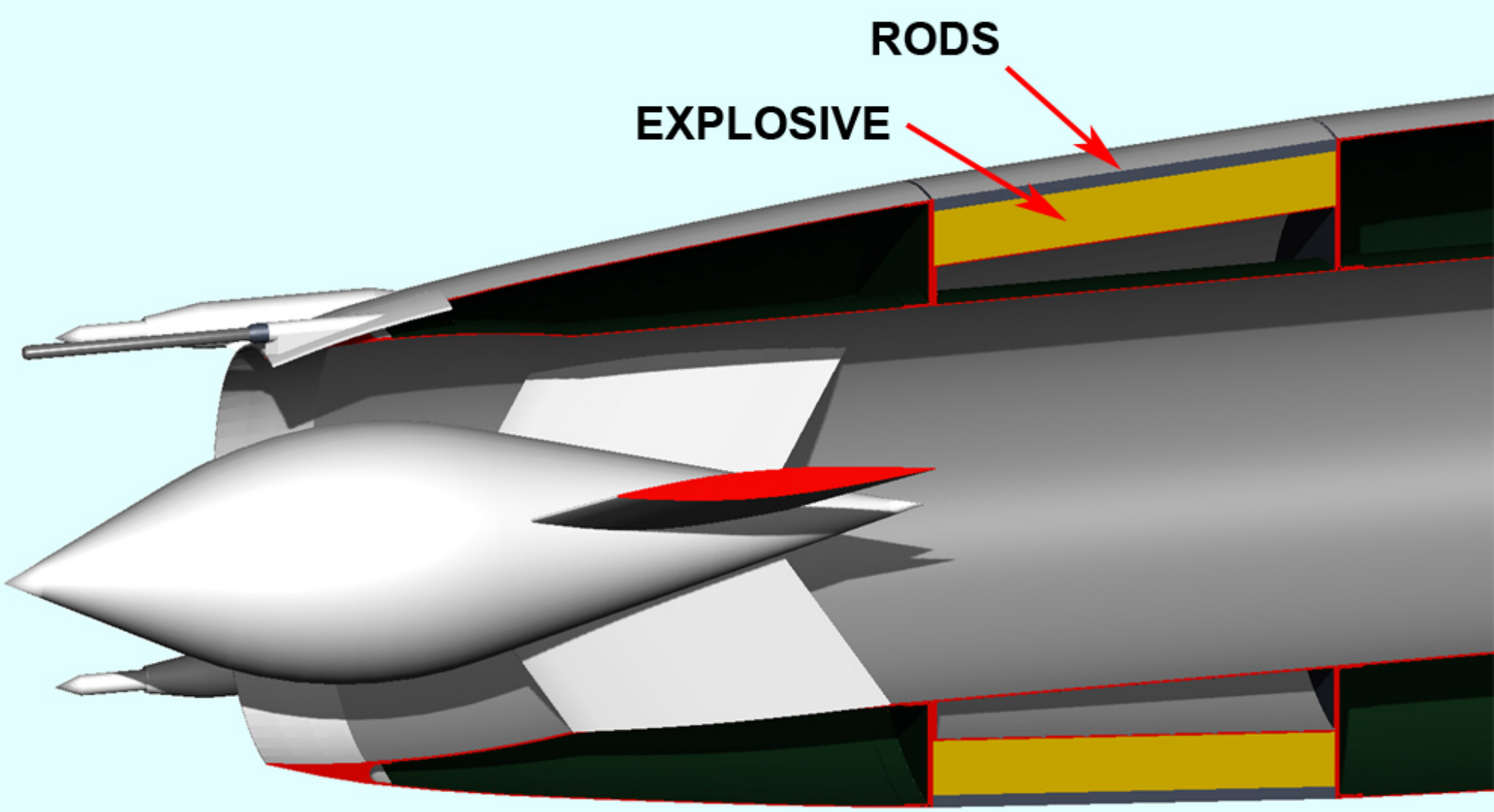

RIM-8A ROD FRAGMENTATION WARHEAD

Copyright © 2009 Phillip R. Hays

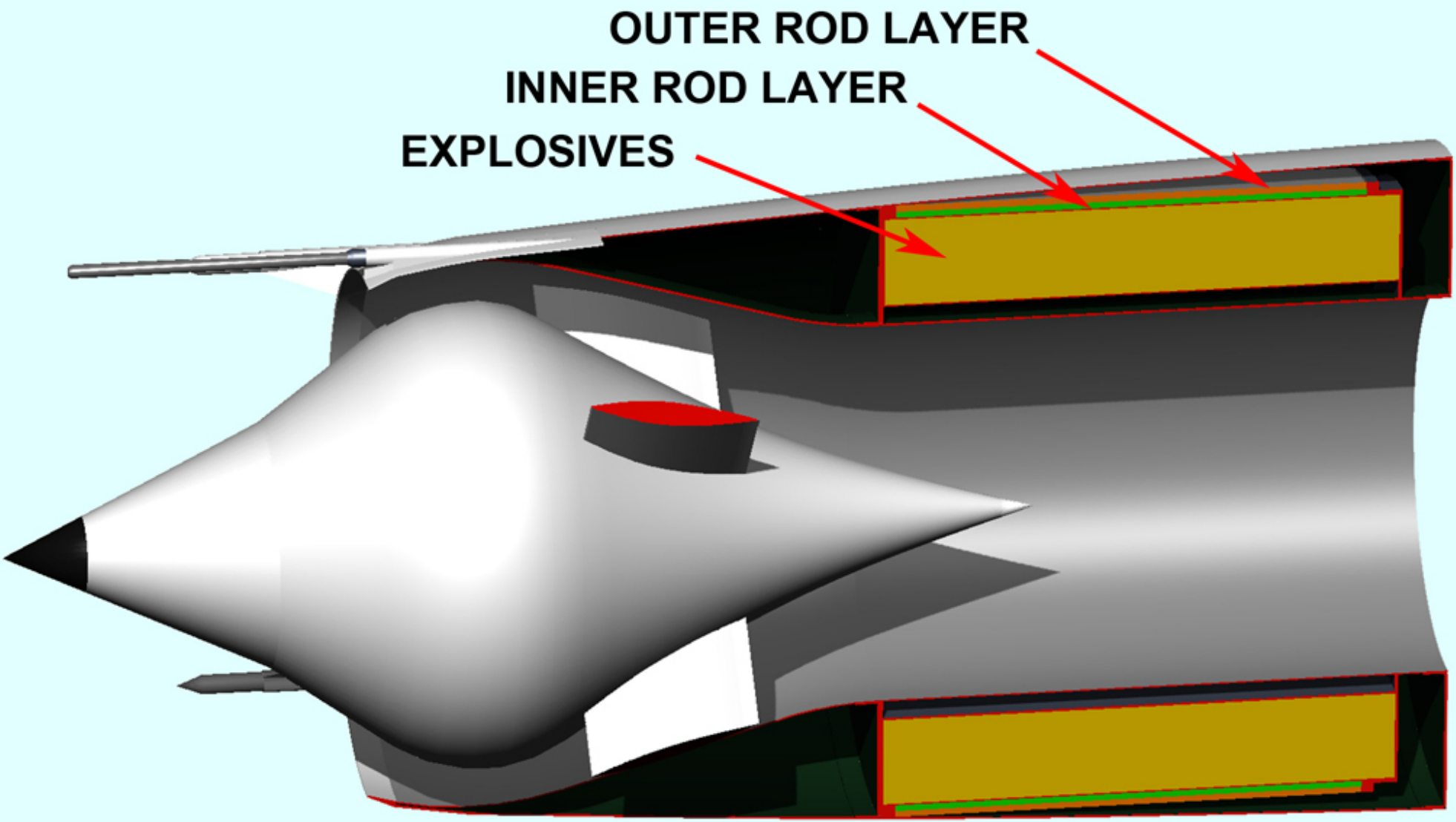

RIM-8C CONTINUOUS ROD WARHEAD

Copyright © 2009 Phillip R. Hays

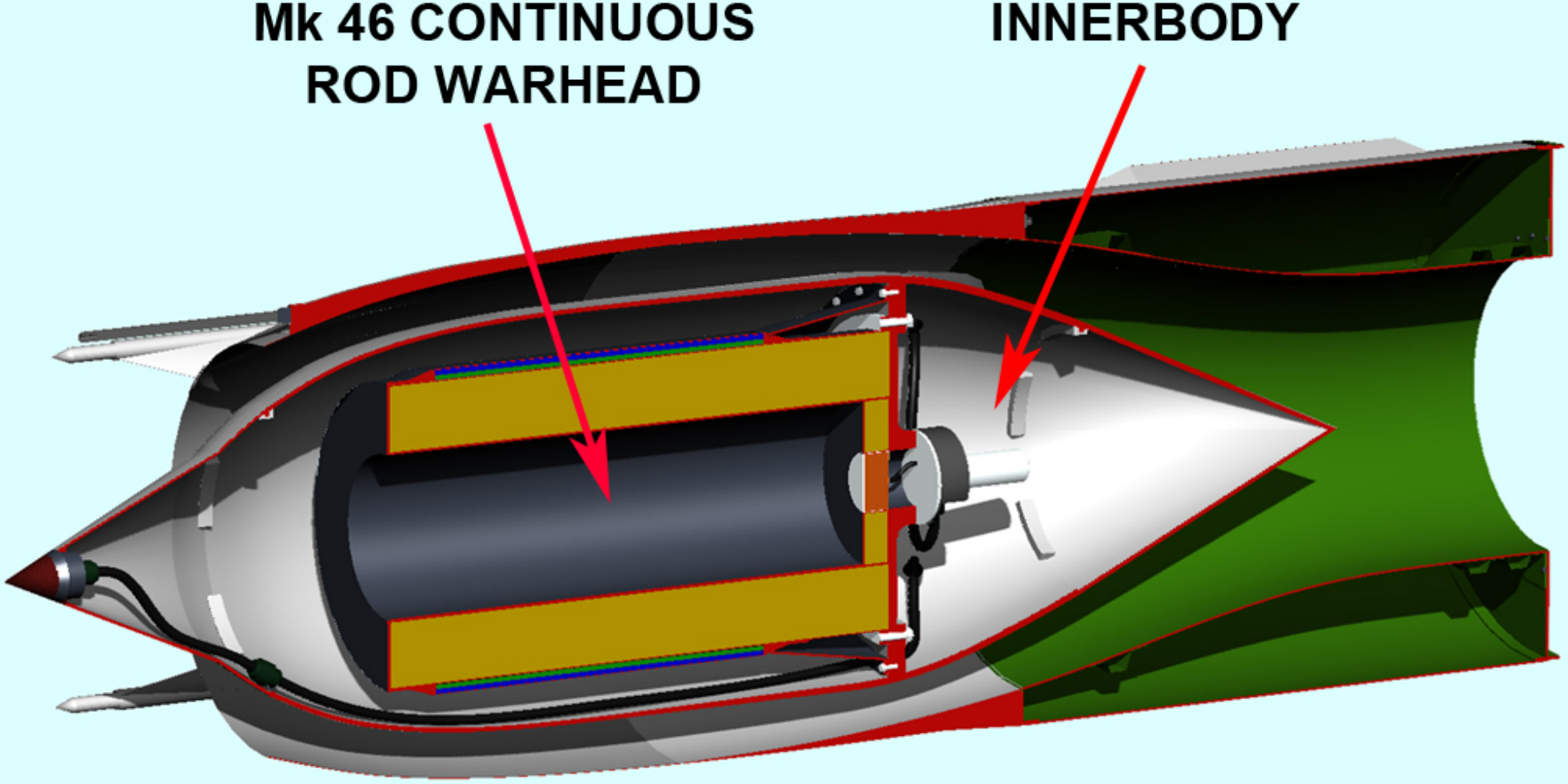

RIM-8G CONVENTIONAL WARHEAD

Copyright © 2009 Phillip R. Hays

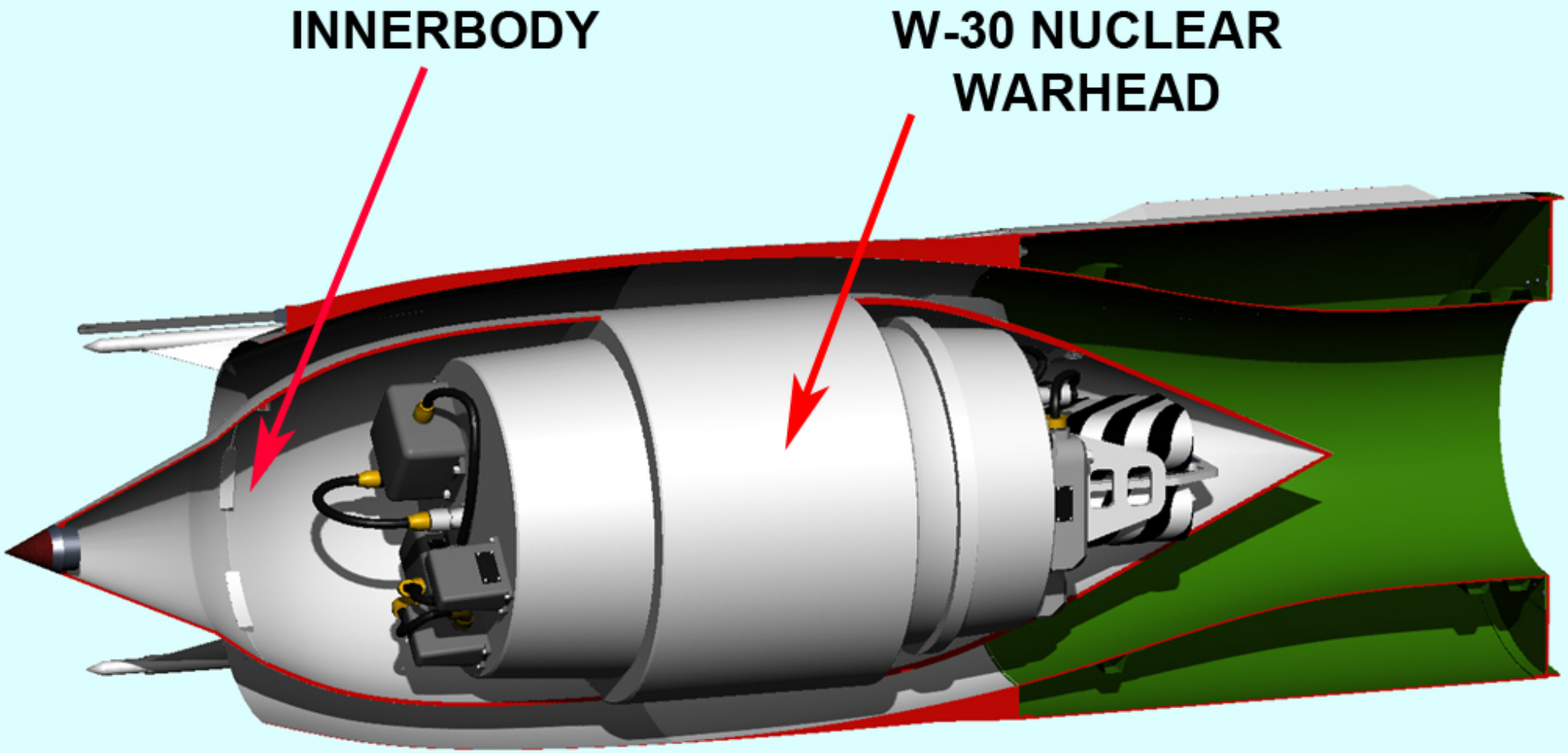

RIM-8G NUCLEAR WARHEAD

Copyright © 2009 Phillip R. Hays

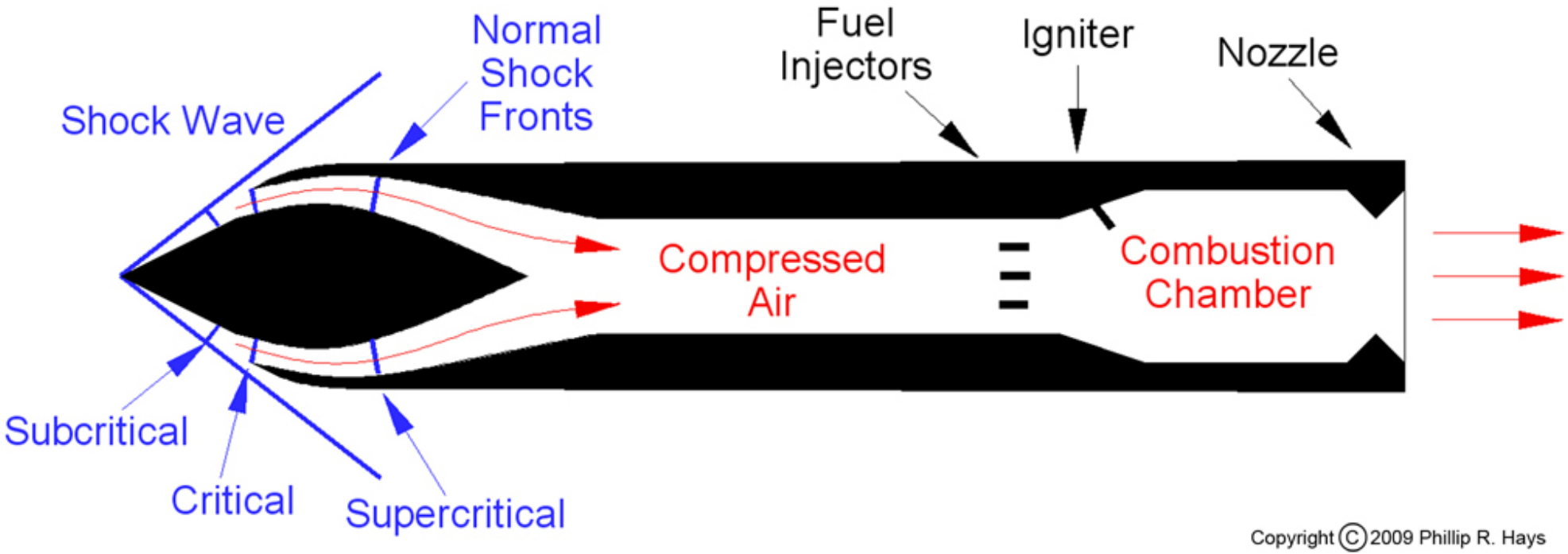

Copyright © 2009 Phillip R. Hays

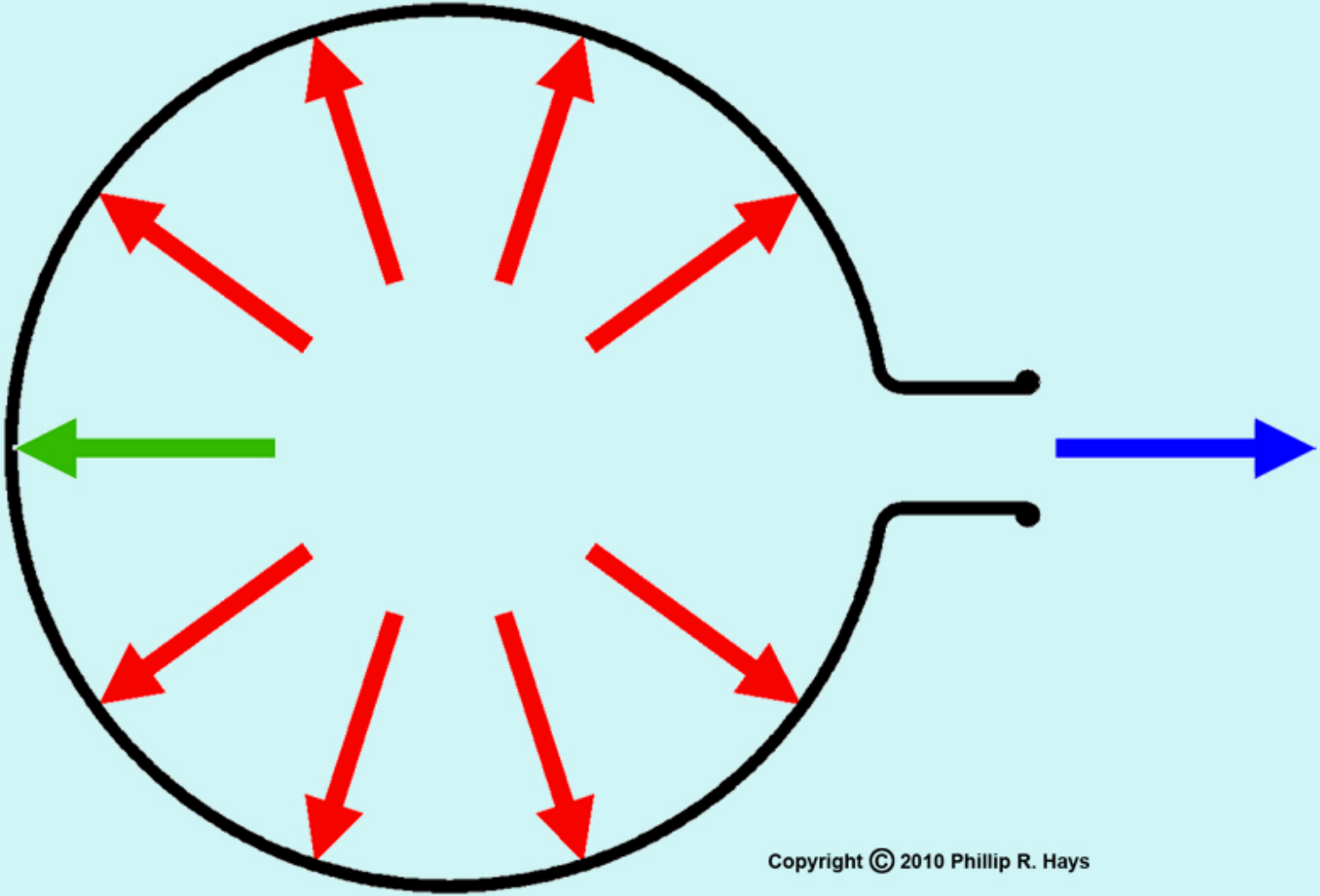

Copyright © 2010 Phillip R. Hays

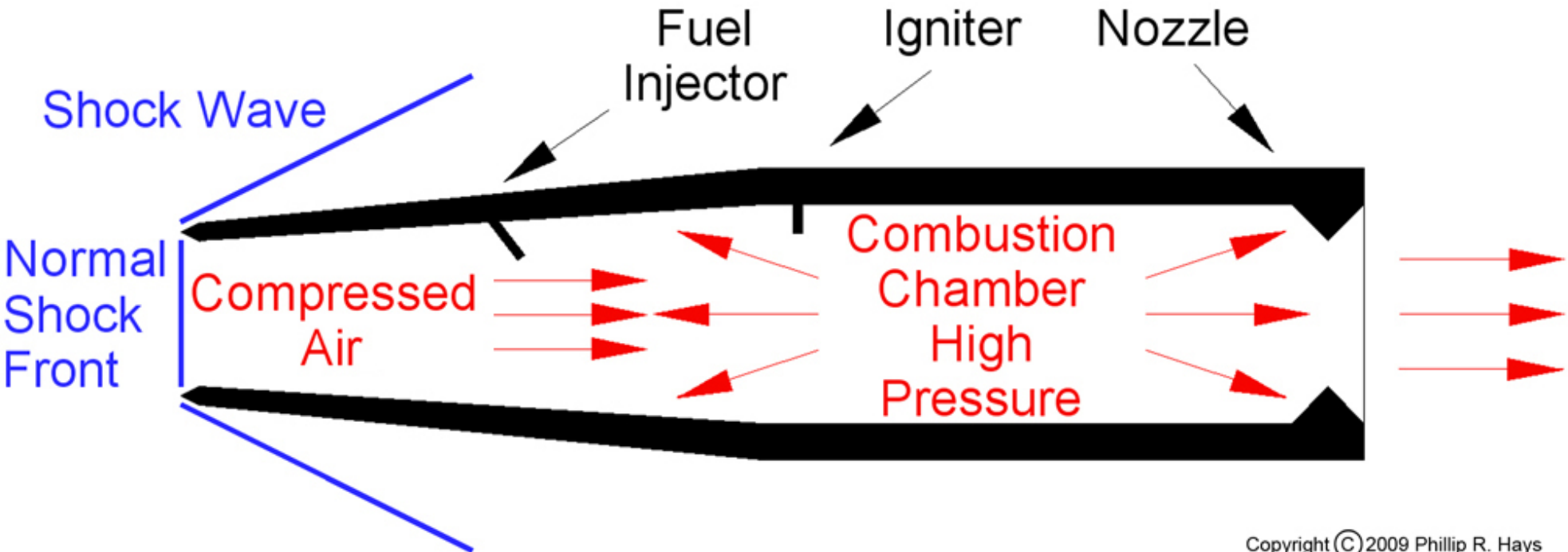

Copyright © 2009 Phillip R. Hays

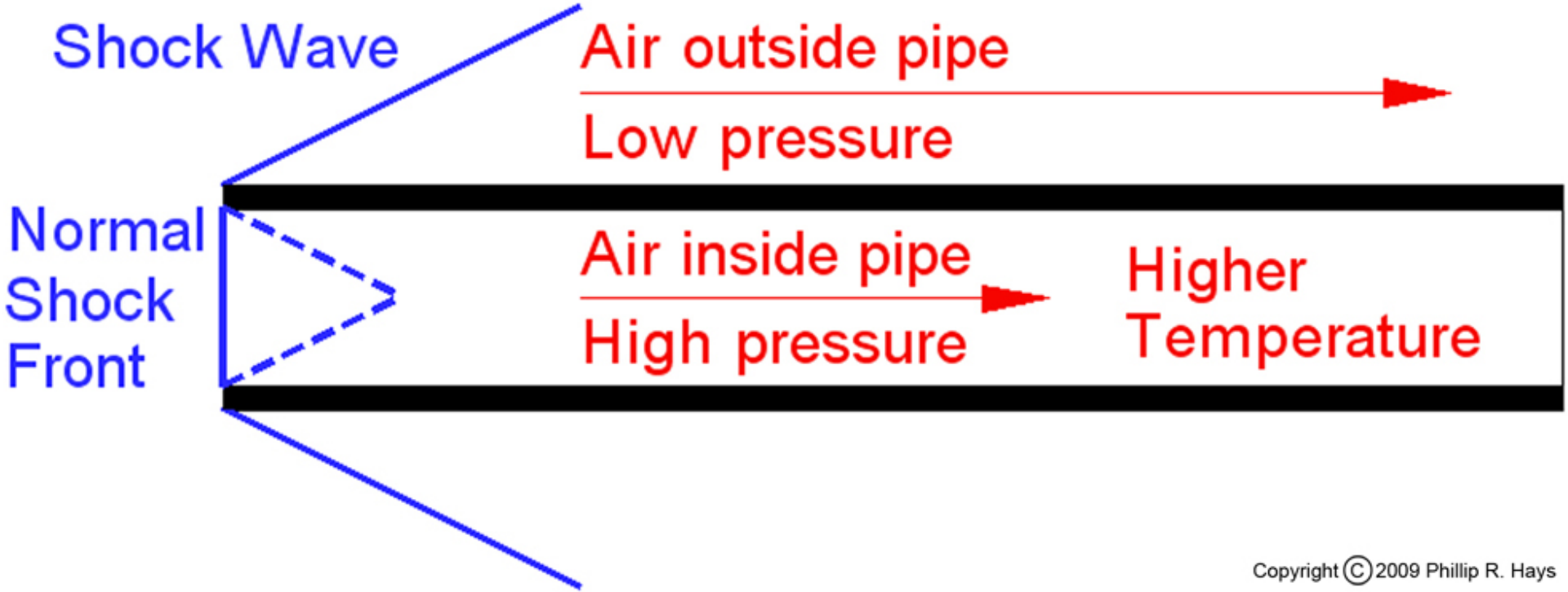

Copyright © 2009 Phillip R. Hays

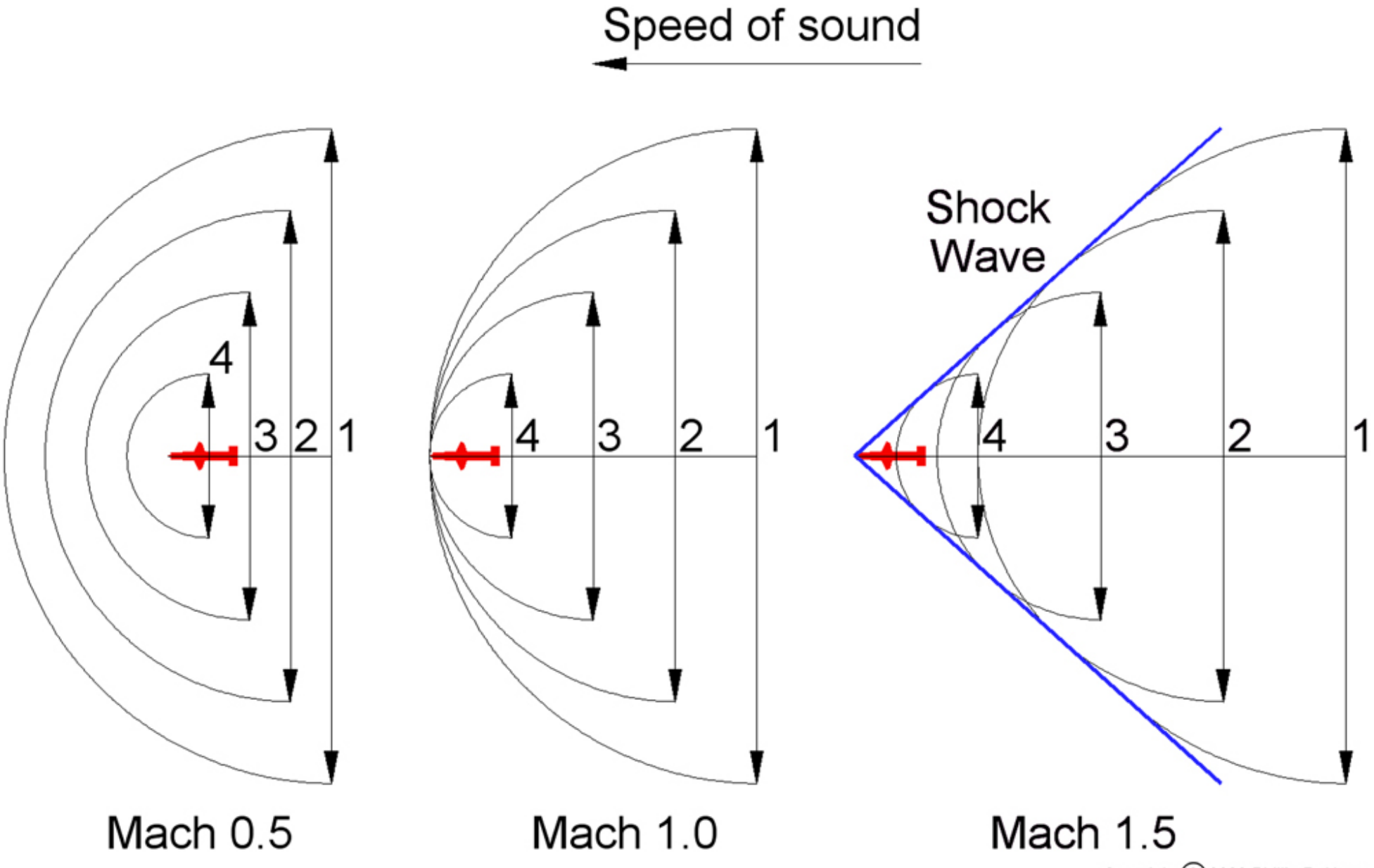

Copyright © 2009 Phillip R. Hays

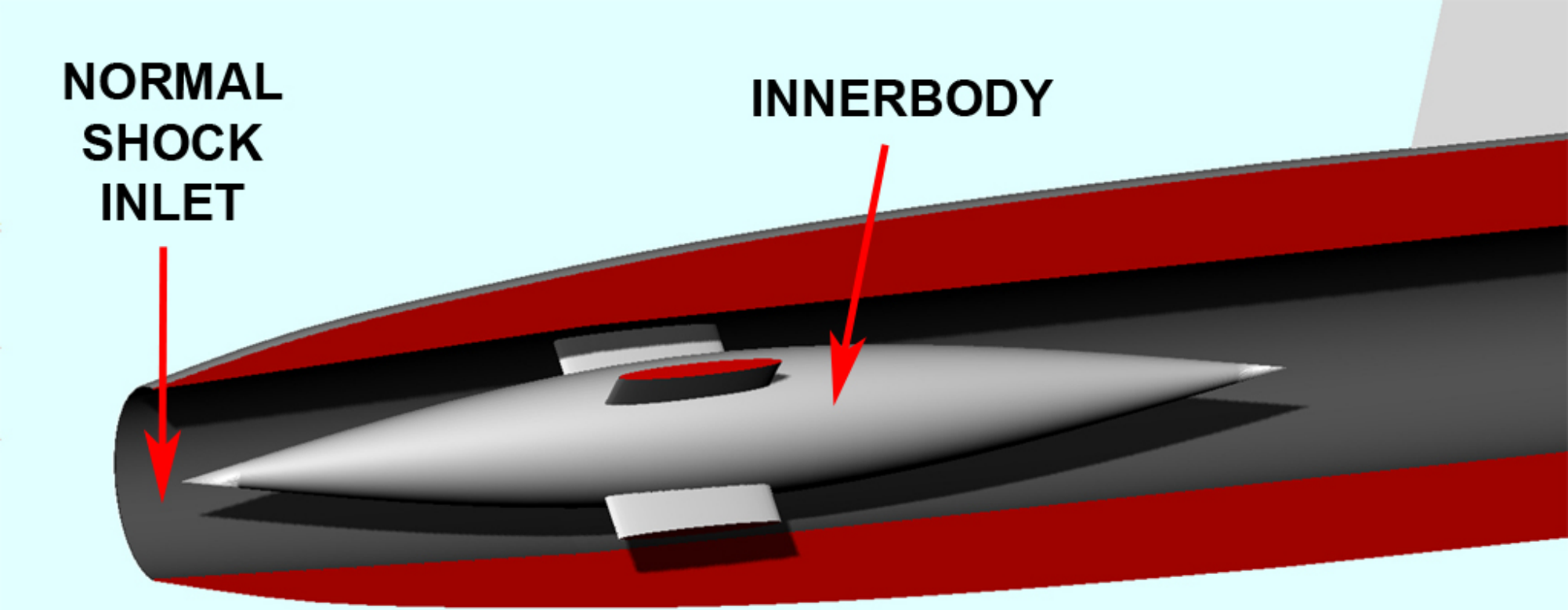

XPM INLET

Copyright © 2009 Phillip R. Hays

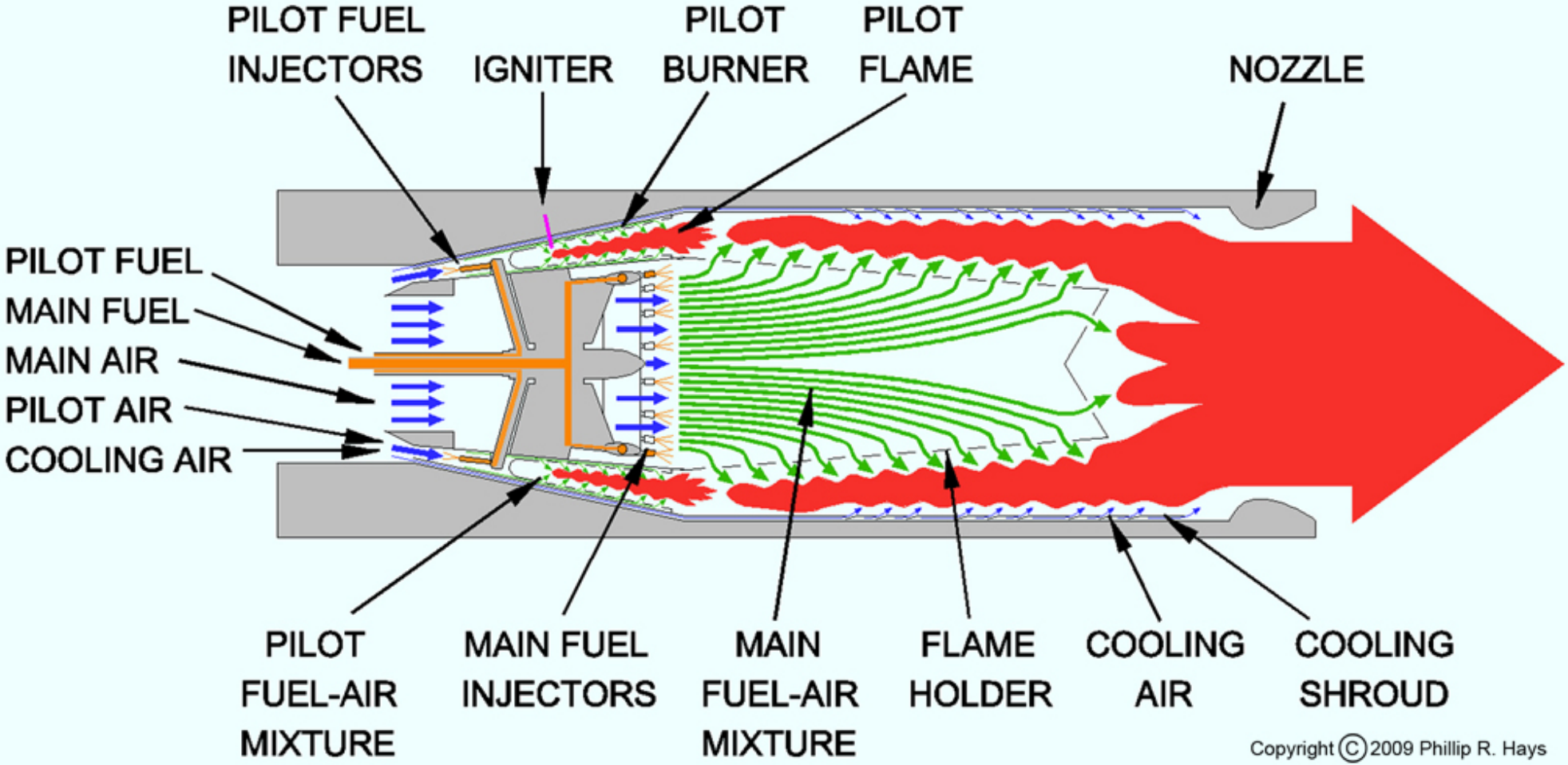

Copyright © 2009 Phillip R. Hays

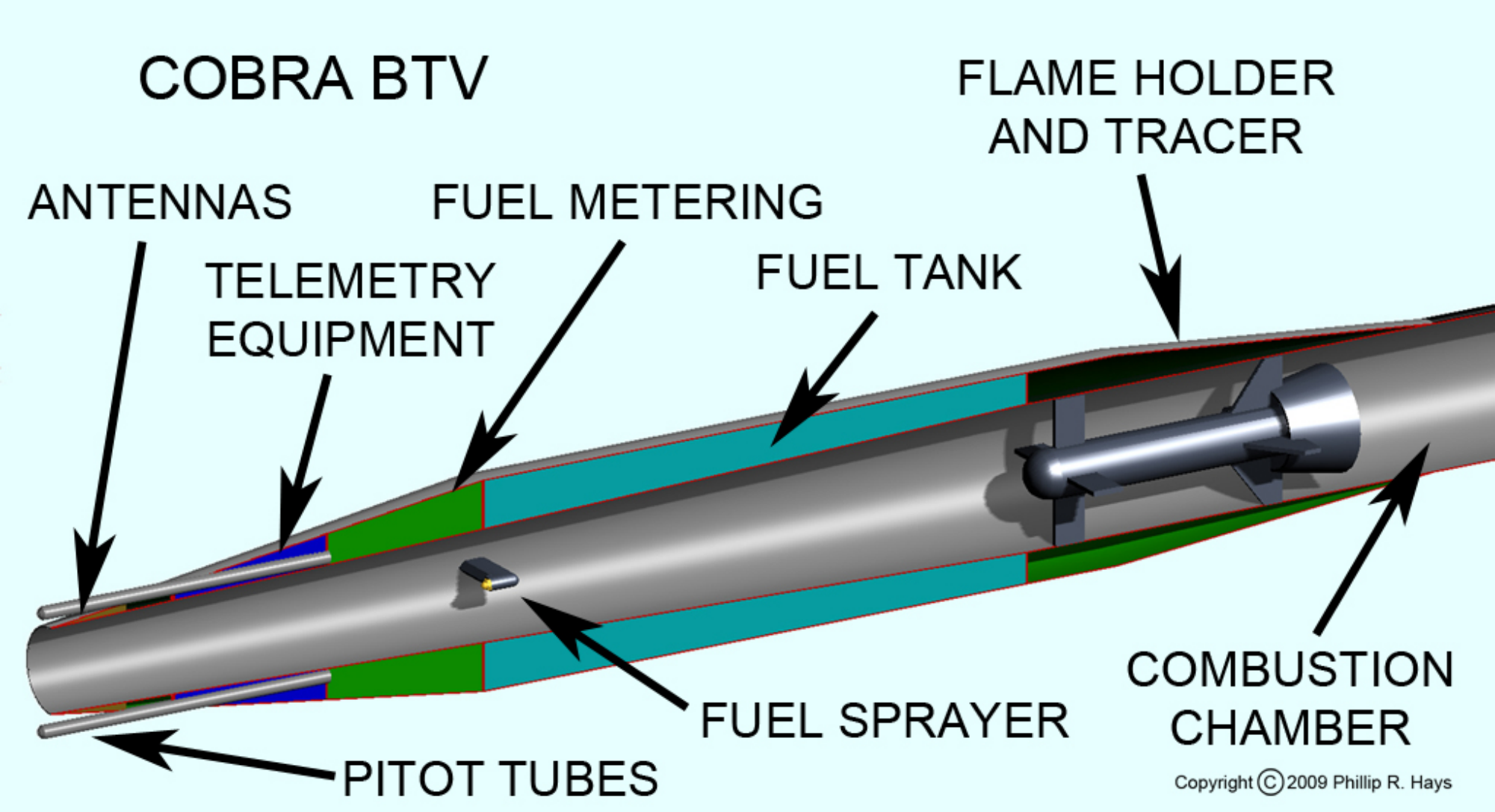
COBRA BTV
FLAME HOLDER
AND TRACER
ANTENNAS
FUEL METERING
TELEMETRY
EQUIPMENT
FUEL TANK
COMBUSTION
CHAMBER
FUEL SPRAYER
PITOT TUBES
Copyright © 2009 Phillip R. Hays

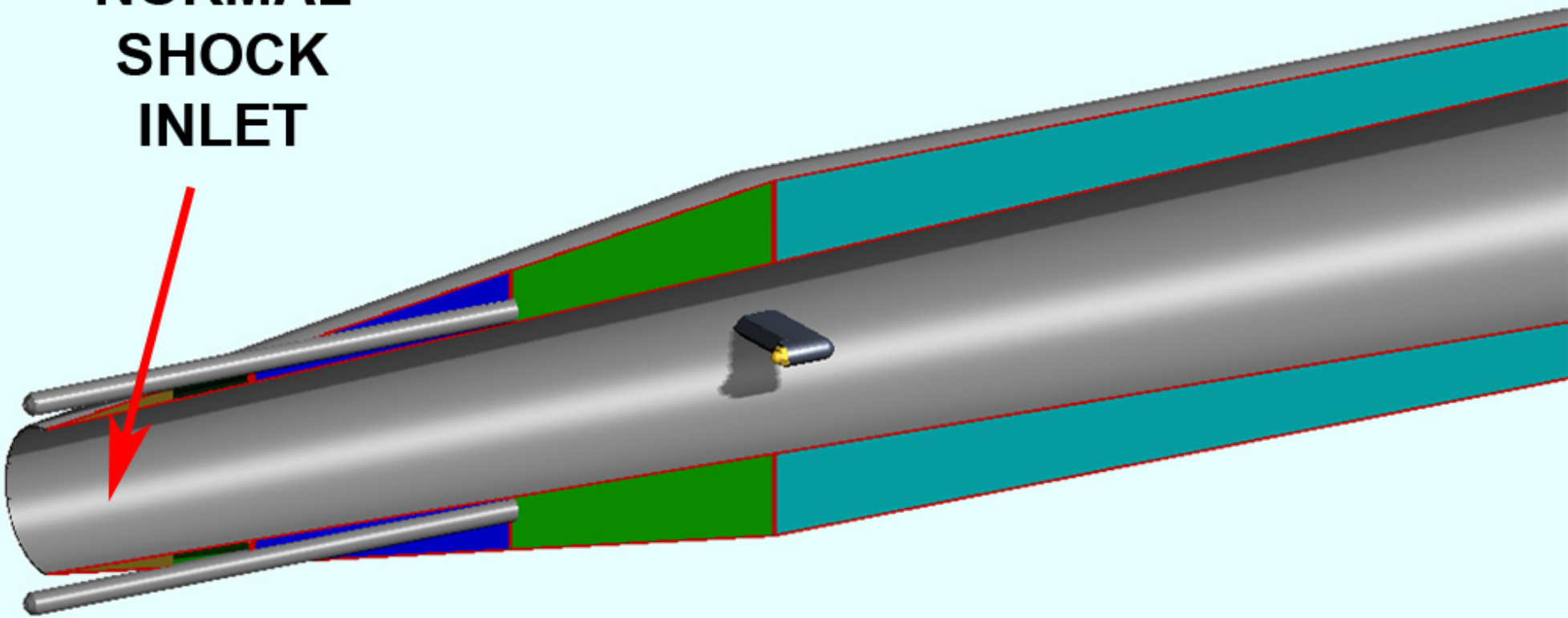

COBRA INLET

Copyright © 2009 Phillip R. Hays

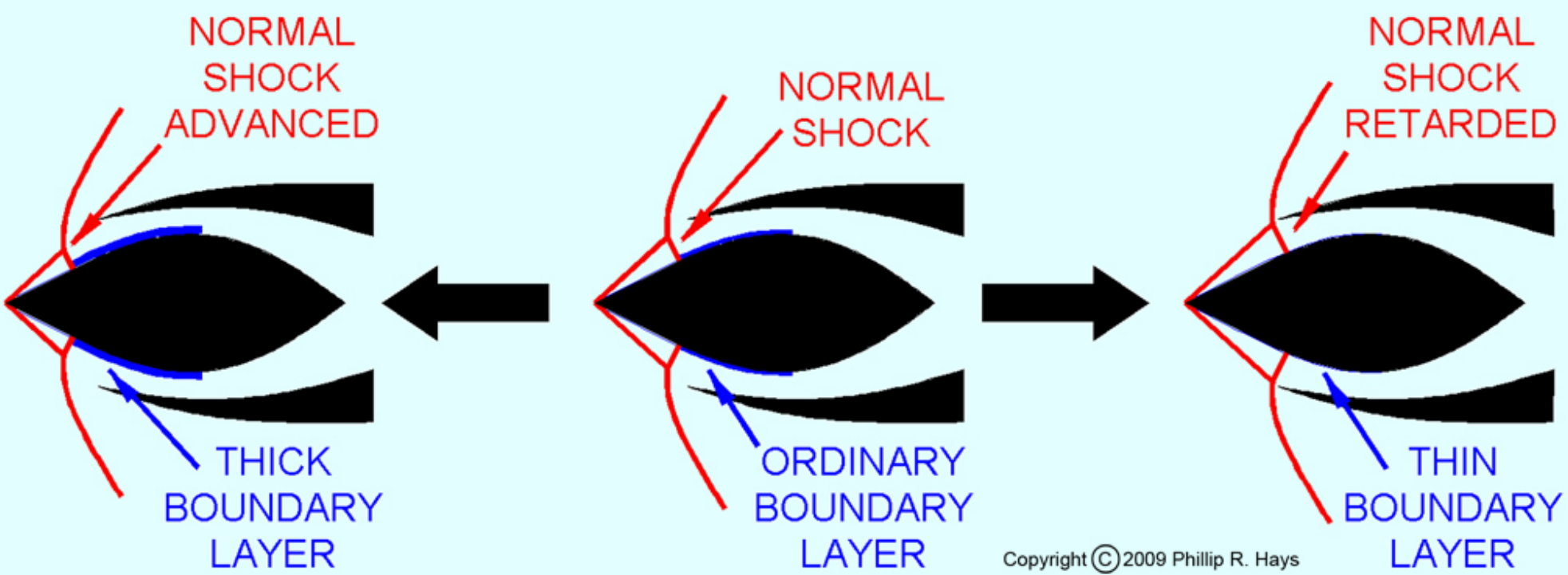

Copyright © 2009 Phillip R. Hays

Copyright © 2009 Phillip R. Hays

6 INCH BTV

COBRA

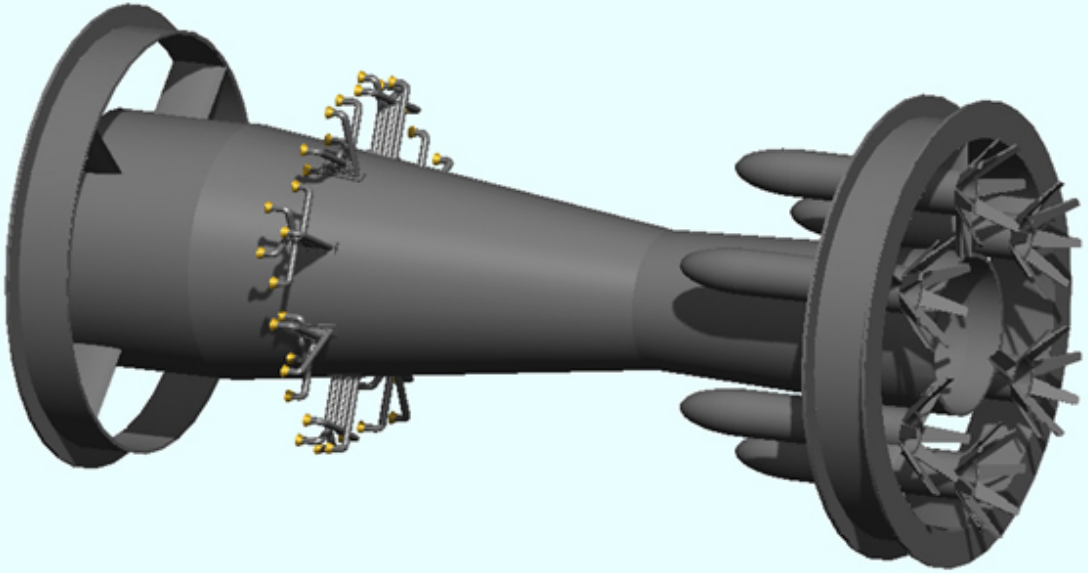

EXPERIMENTAL 18 INCH BURNER

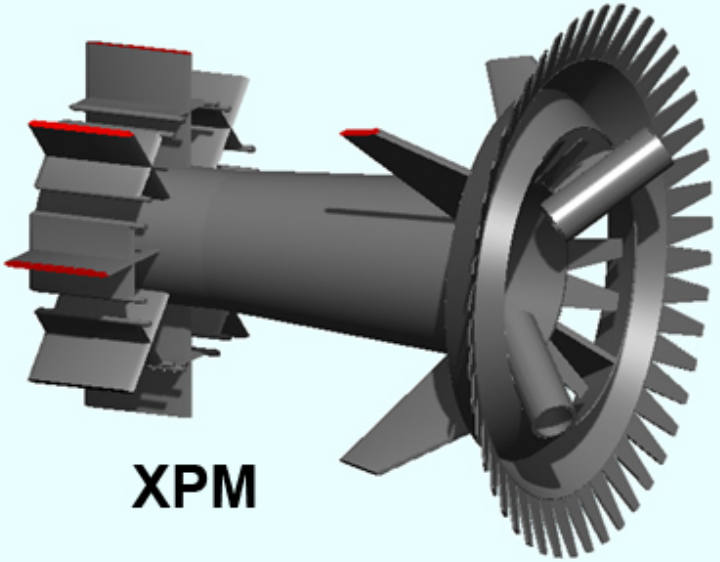

XPM

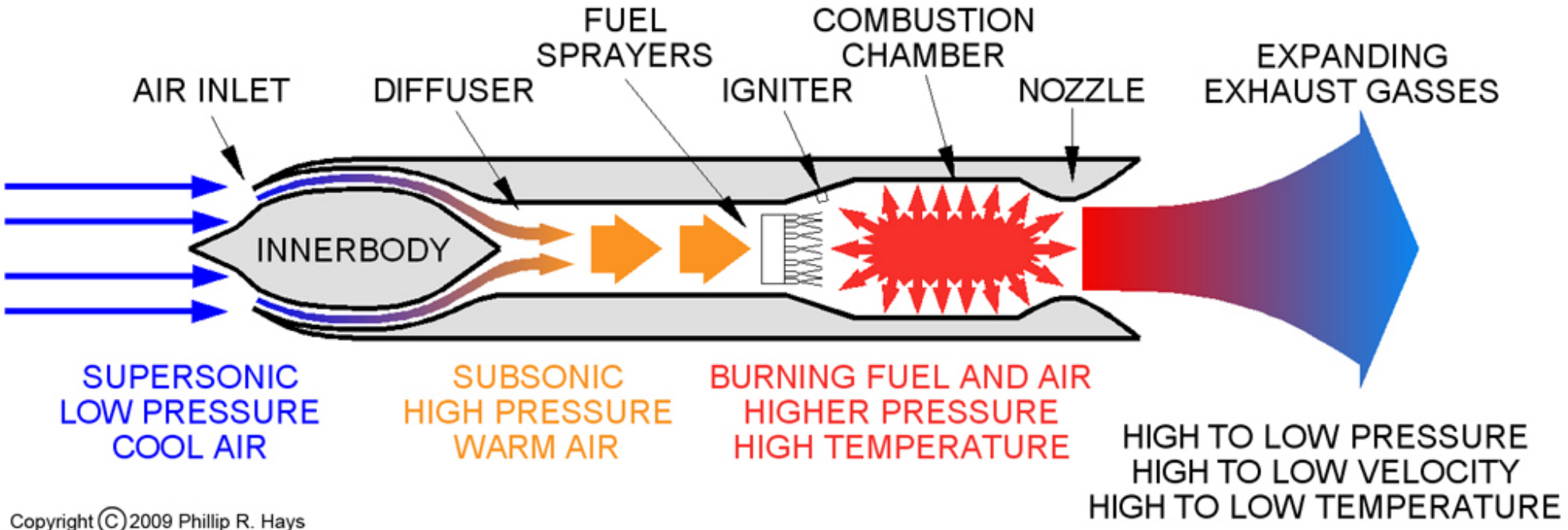

Copyright © 2009 Phillip R. Hays

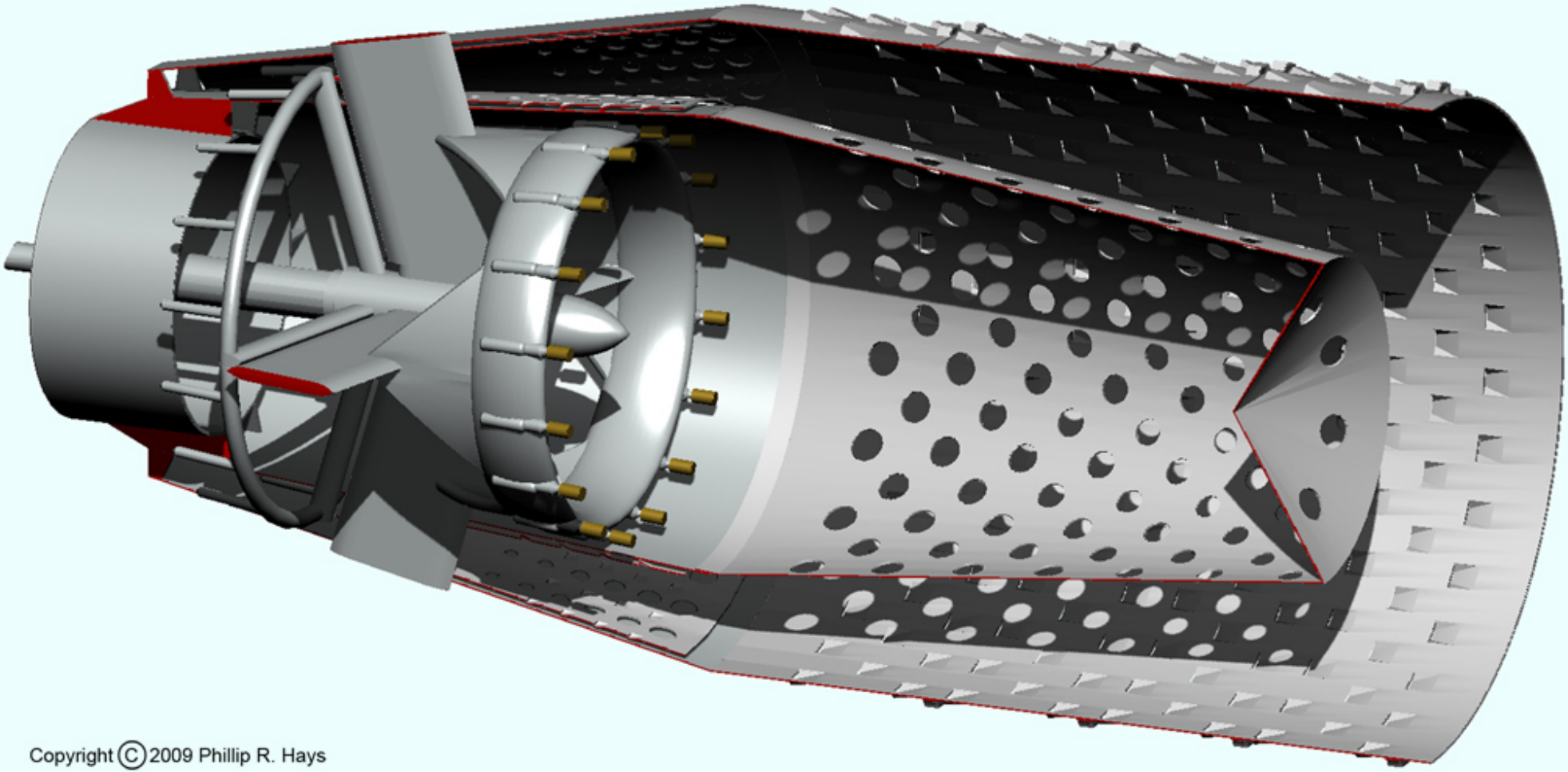

Copyright © 2009 Phillip R. Hays

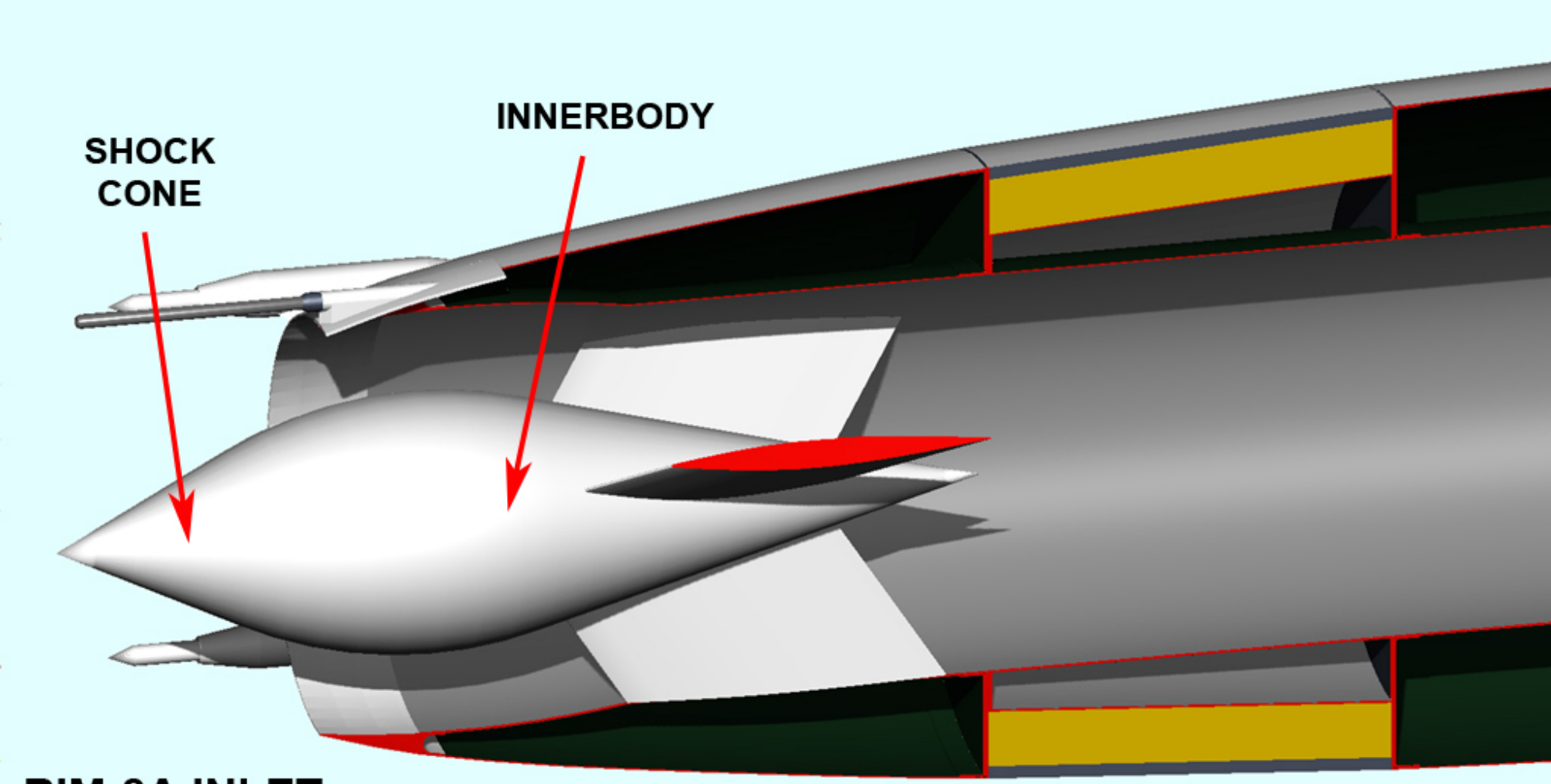

RIM-8A INLET

Copyright © 2009 Phillip R. Hays

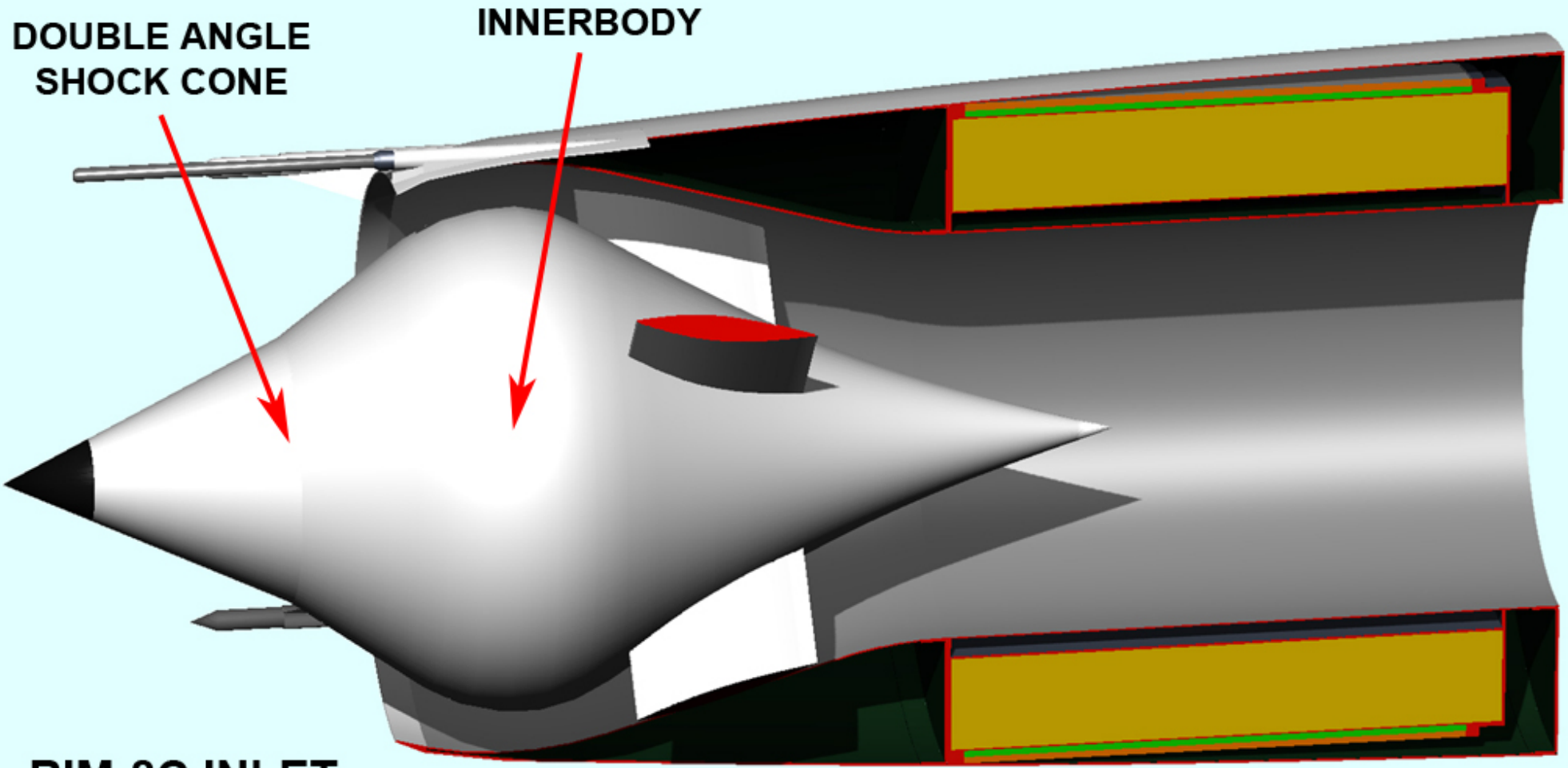

RIM-8C INLET

Copyright © 2009 Phillip R. Hays

TALOS RIM-8E - RIM-8J

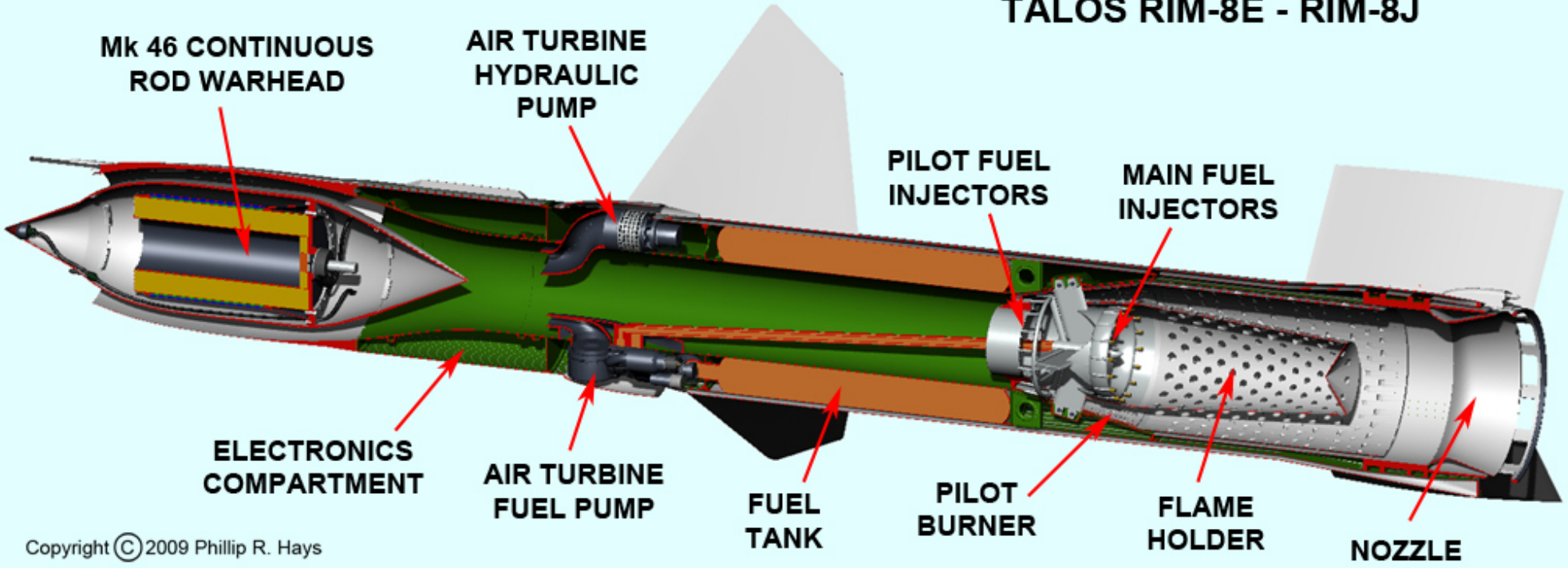

Copyright © 2009 Phillip R. Hays

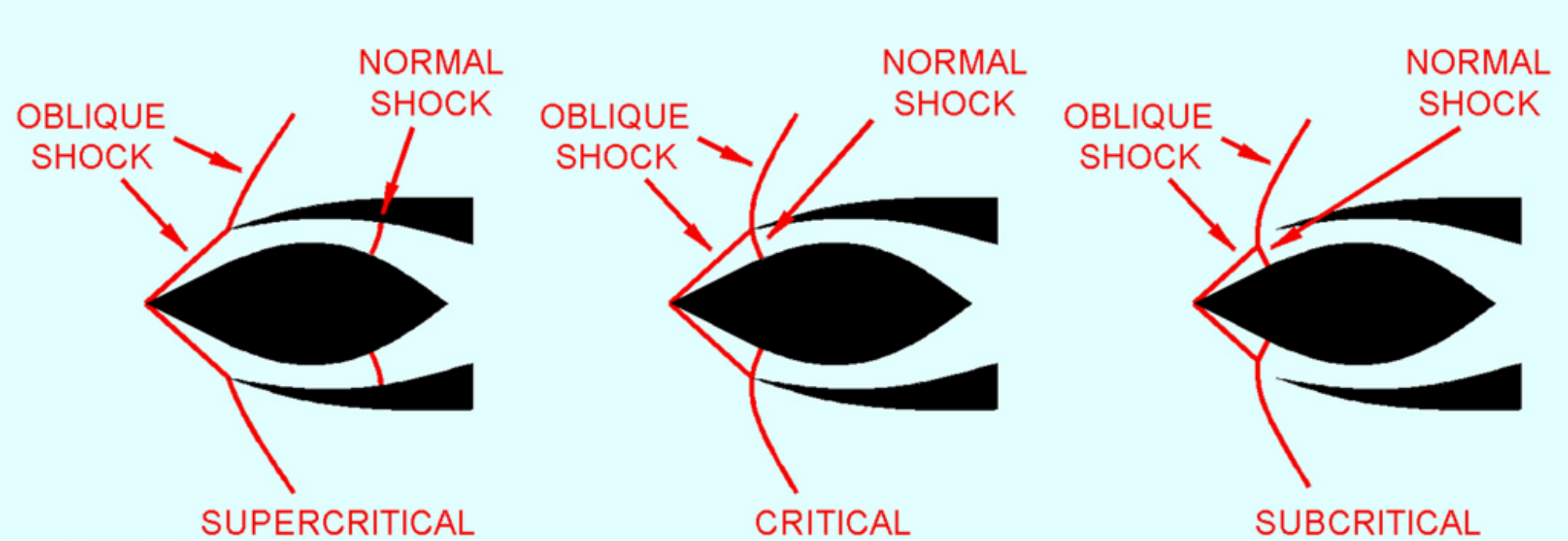

Copyright © 2009 Phillip R. Hays

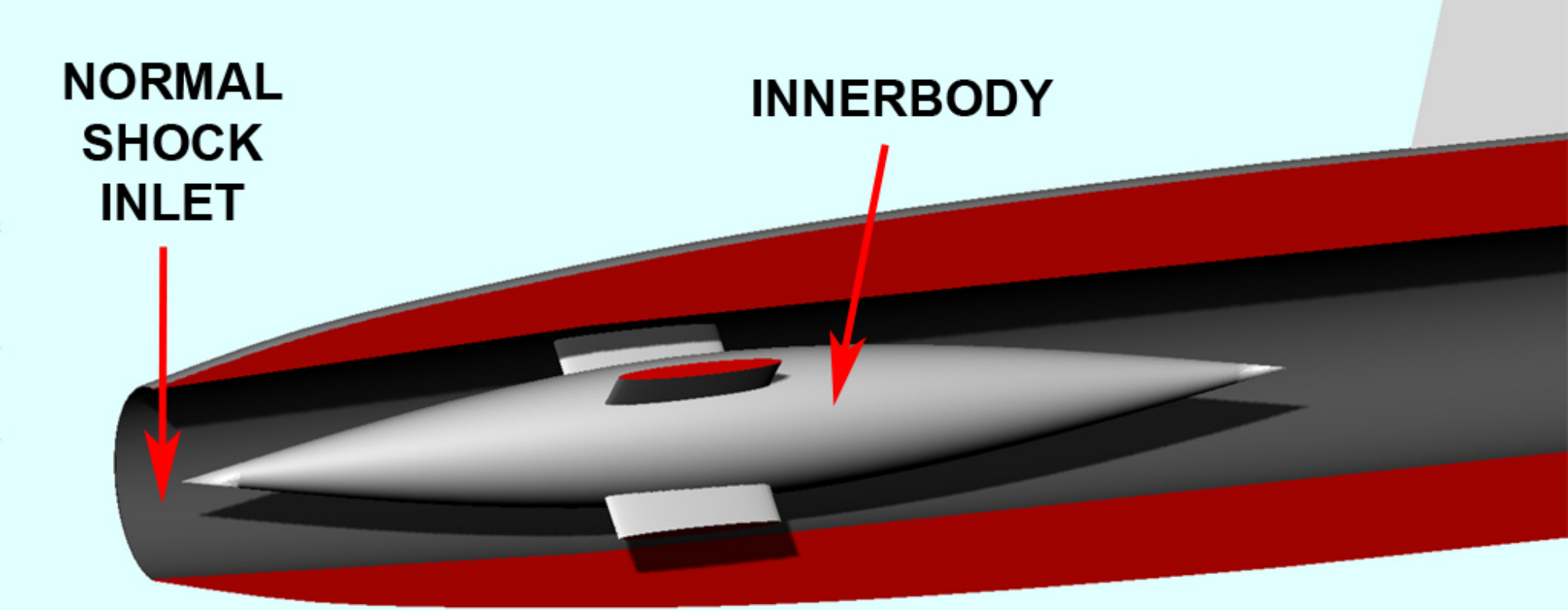

XPM INLET

Copyright © 2009 Phillip R. Hays

Copyright © 2009 Phillip R. Hays

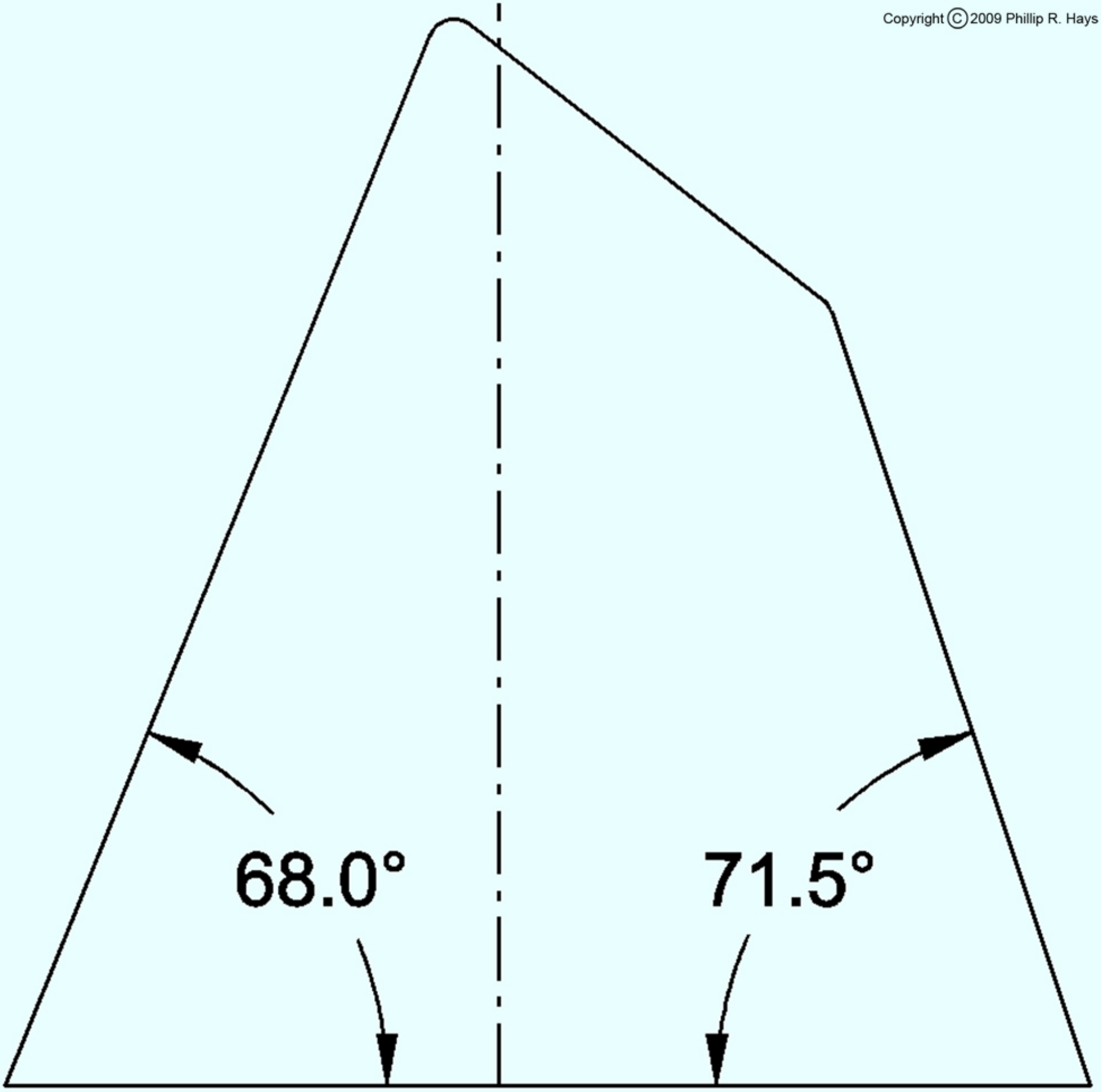

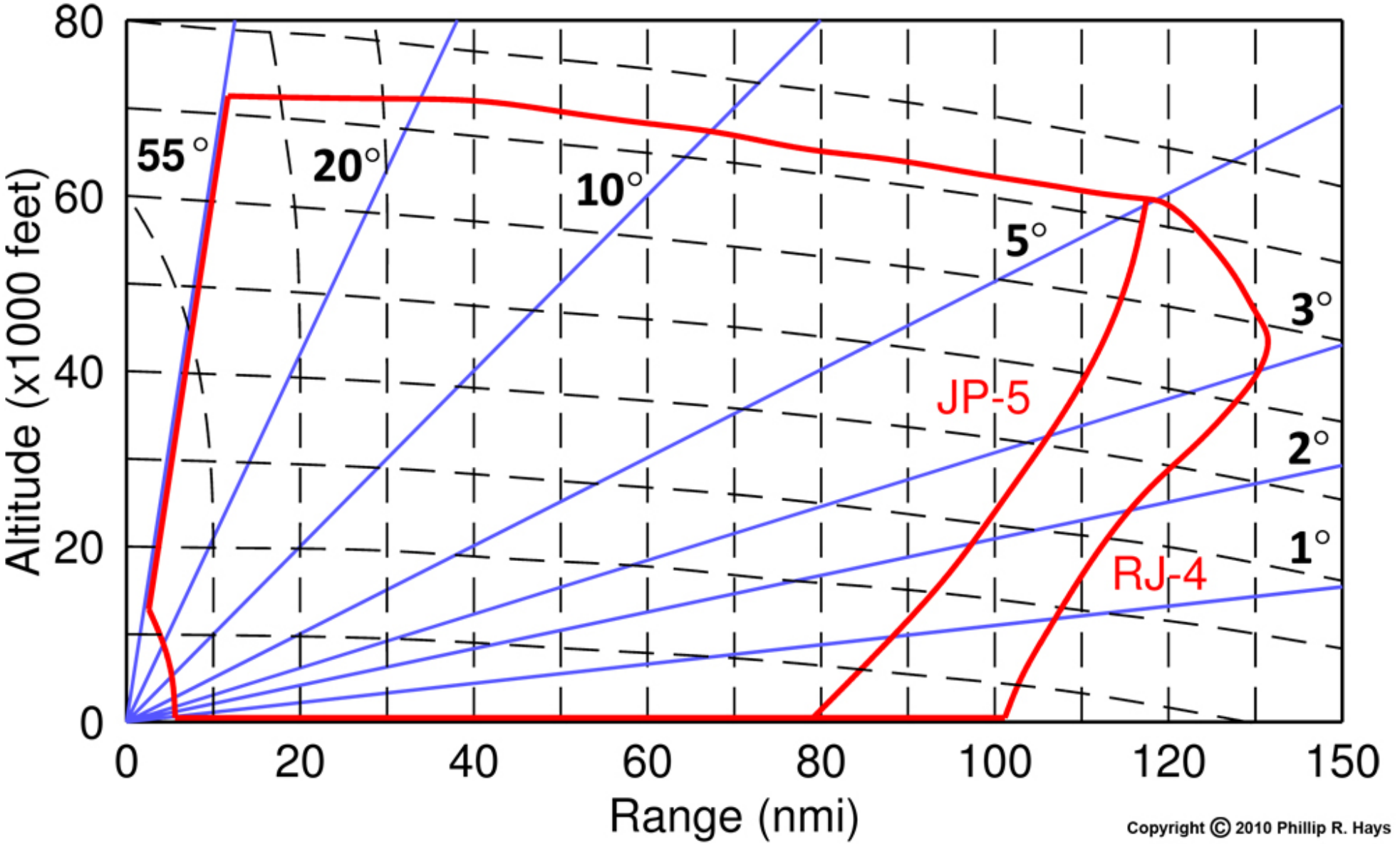

Copyright © 2010 Phillip R. Hays

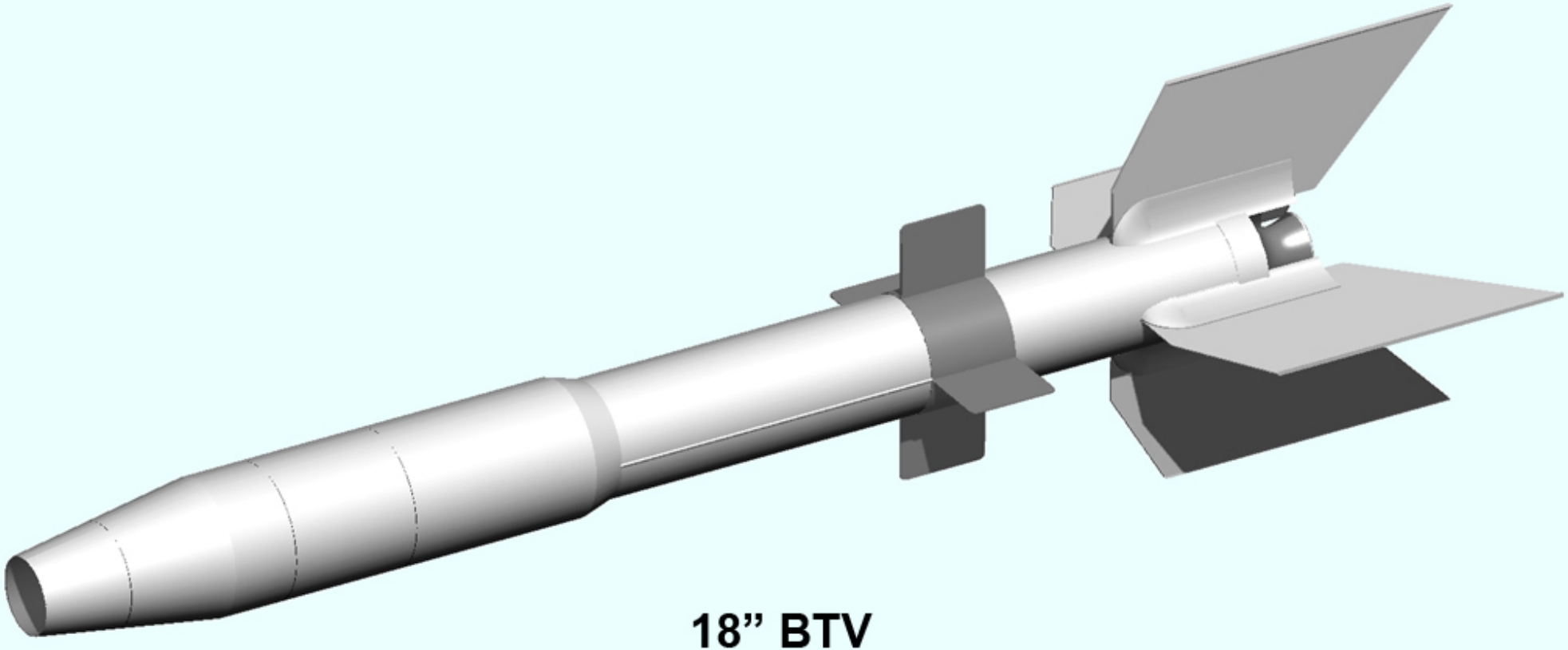

18” BTV

Copyright © 2009 Phillip R. Hays

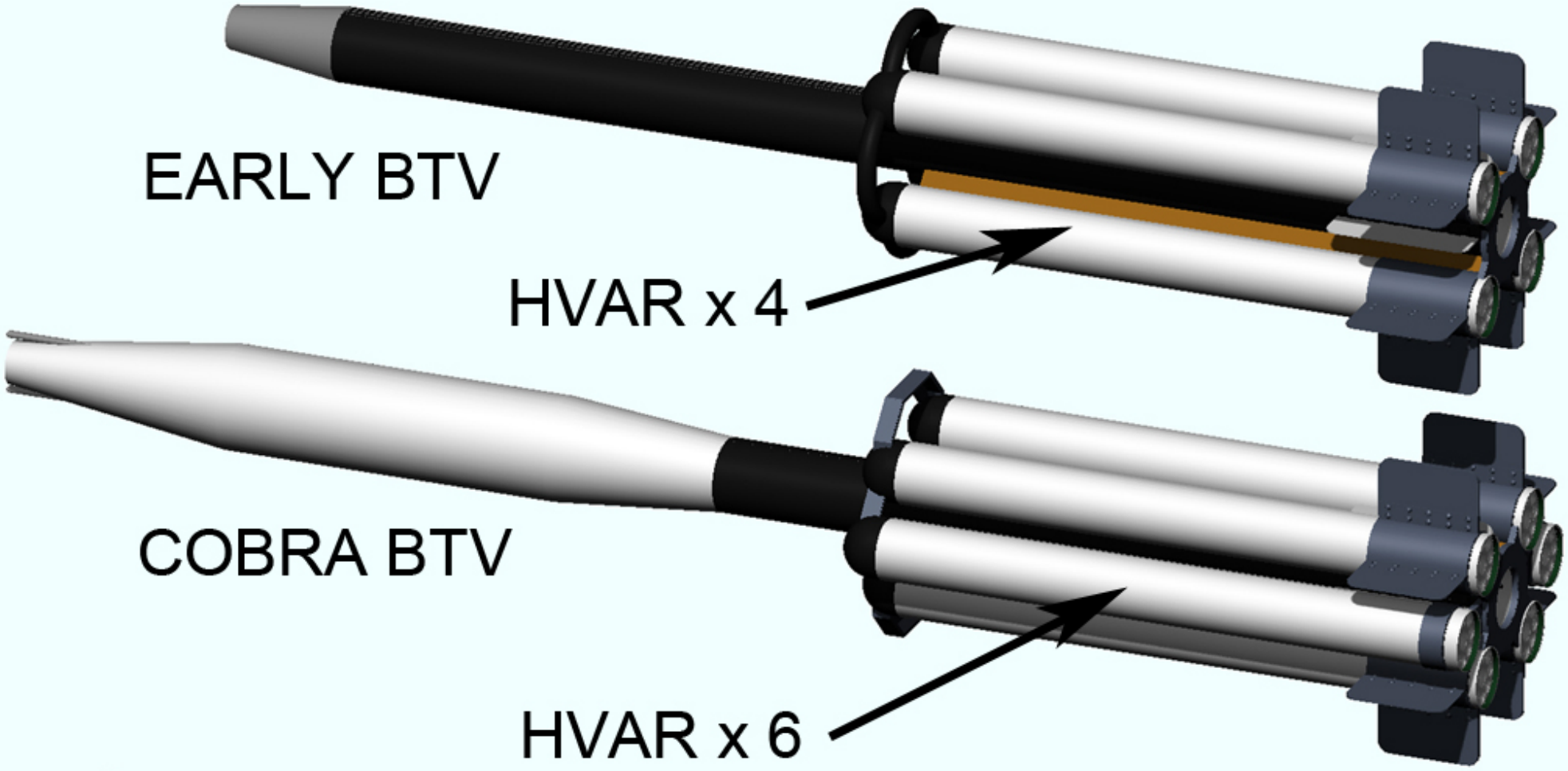

Copyright © 2009 Phillip R. Hays

EXTENDED RANGE TALOS

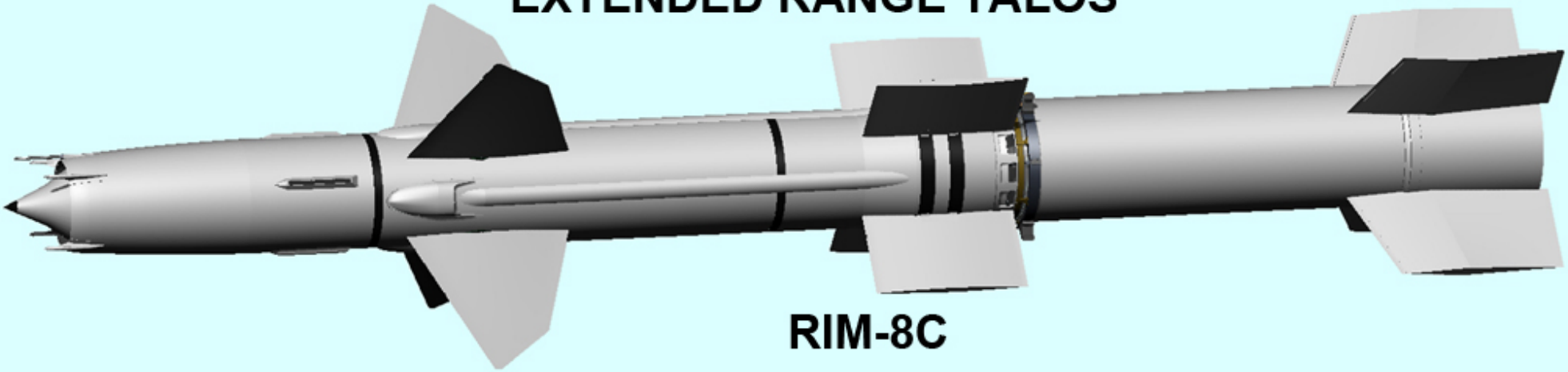

RIM-8C

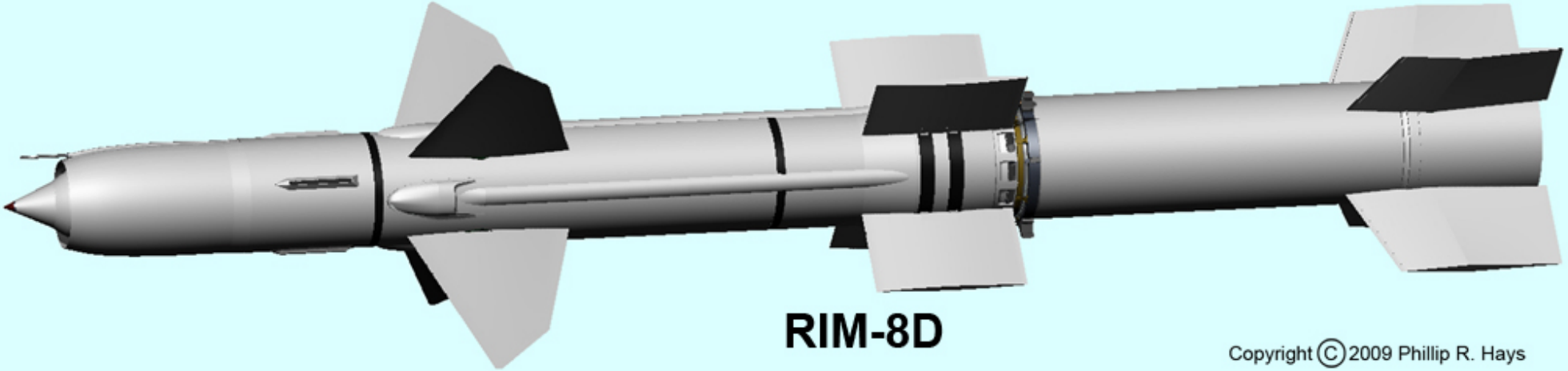

RIM-8D

Copyright © 2009 Phillip R. Hays

FIRST TACTICAL TALOS

RIM-8A

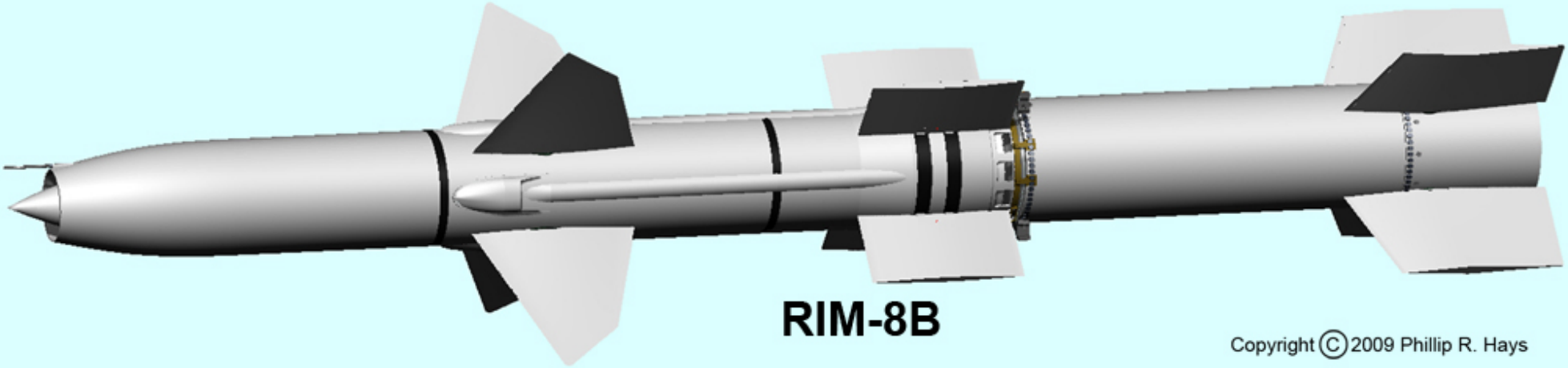

RIM-8B

Copyright © 2009 Phillip R. Hays

BURNER TEST VEHICLES

EXPERIMENTAL PROTOTYPE MISSILE (XPM)

PROTOTYPE TALOS

FIRST TACTICAL TALOS

EXTENDED RANGE TALOS

UNIFIED TALOS

VANDAL

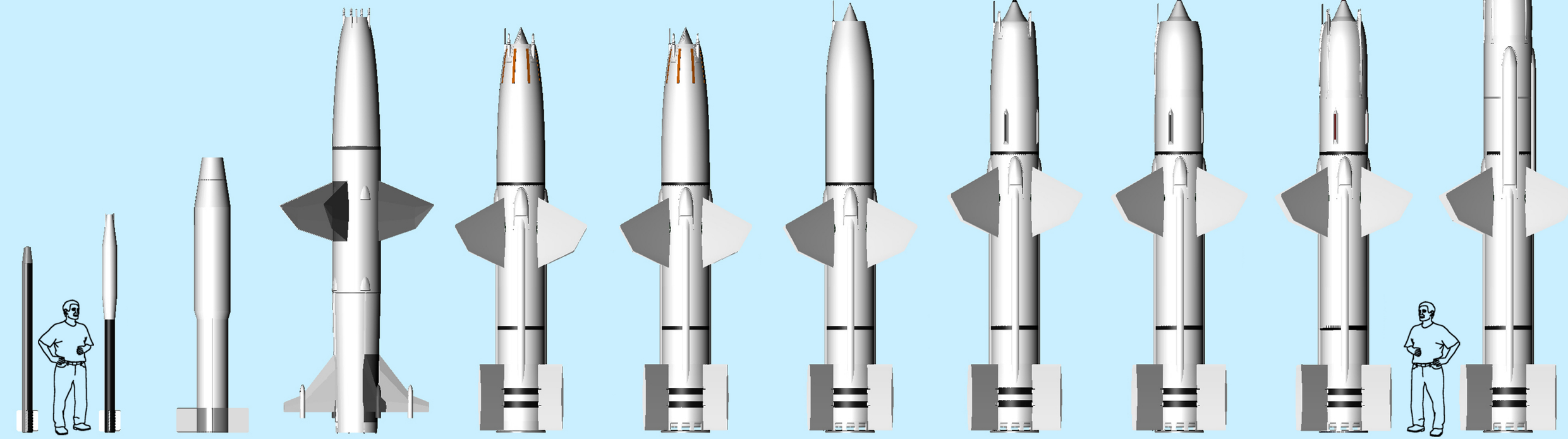

6” BTV COBRA

PTV-N-4 18” BTV

RTV-N-6

XSAM-N-6

RIM-8A

RIM-8B

RIM-8C

RIM-8D

RIM-8E
RIM-8G
RGM-8H
RIM-8J

MQM-8G

Copyright©2011 Phillip R. Hays

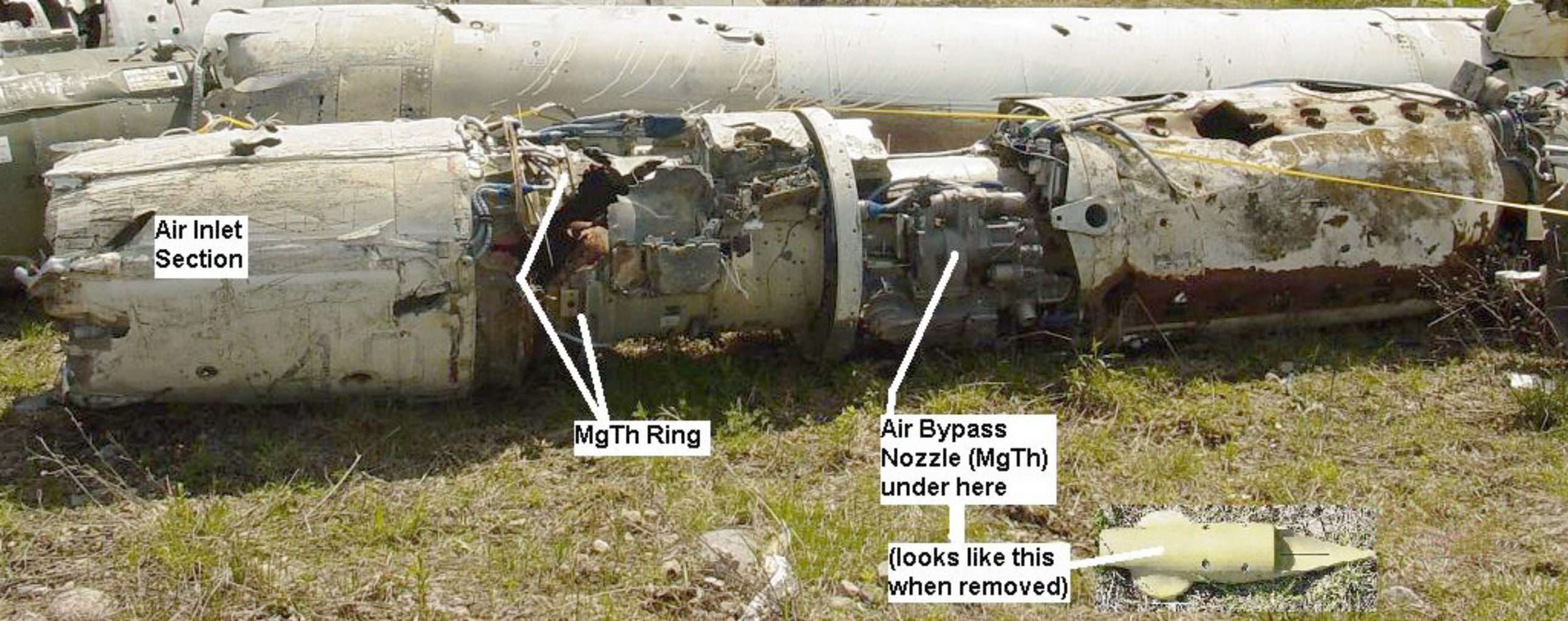
Air Inlet Section
MgTh Ring
Air Bypass Nozzle (MgTh) under here
(looks like this when removed)

5

UNIFIED TALOS

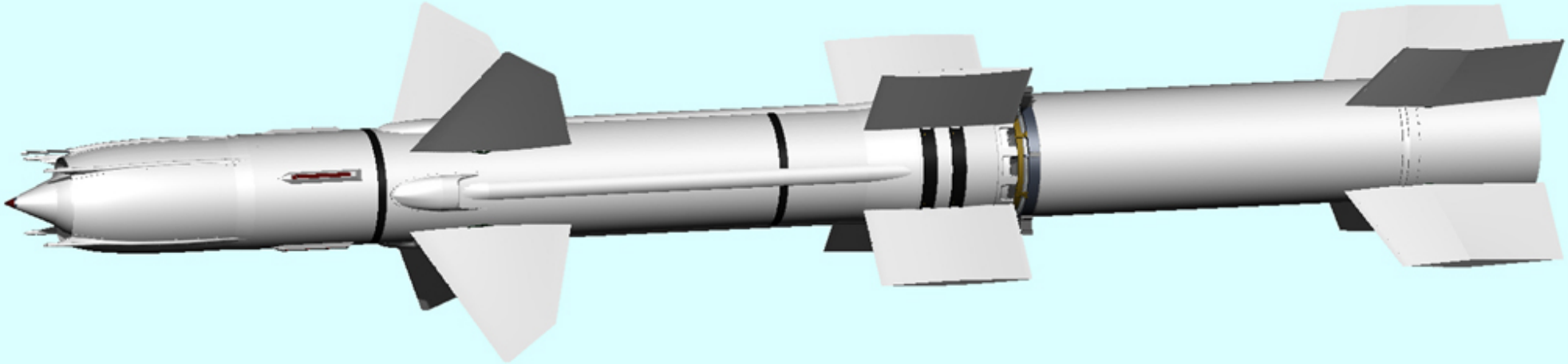

RIM-8E, RIM-8G, RGM-8H, RIM-8J

Copyright © 2009 Phillip R. Hays

VANDAL EXTENDED RANGE

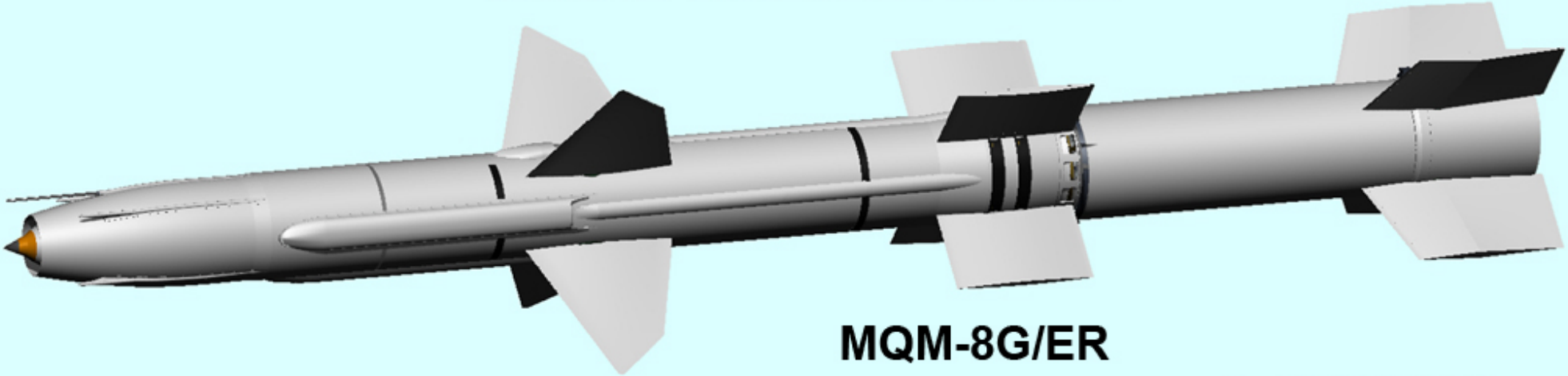

MQM-8G/ER

Copyright © 2009 Phillip R. Hays

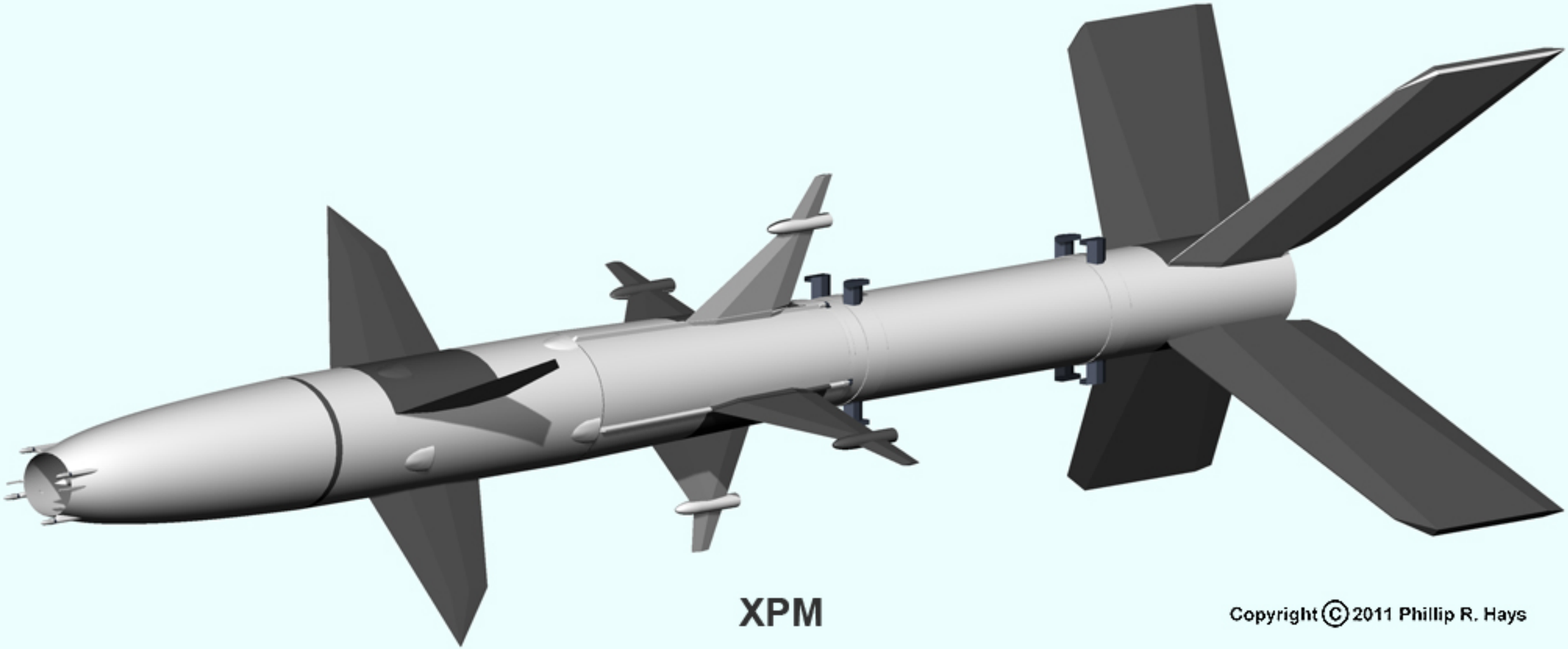

XPM

Copyright © 2011 Phillip R. Hays

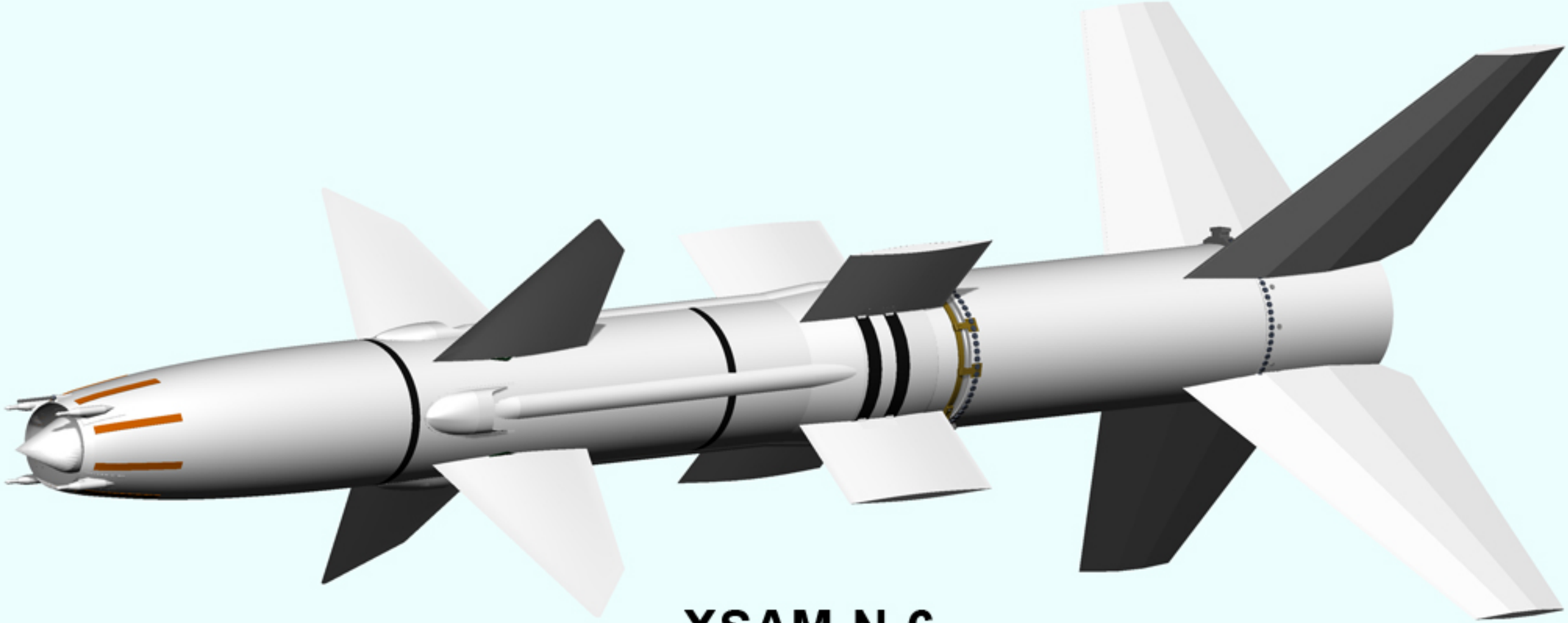

XSAM-N-6

Copyright © 2011 Phillip R. Hays

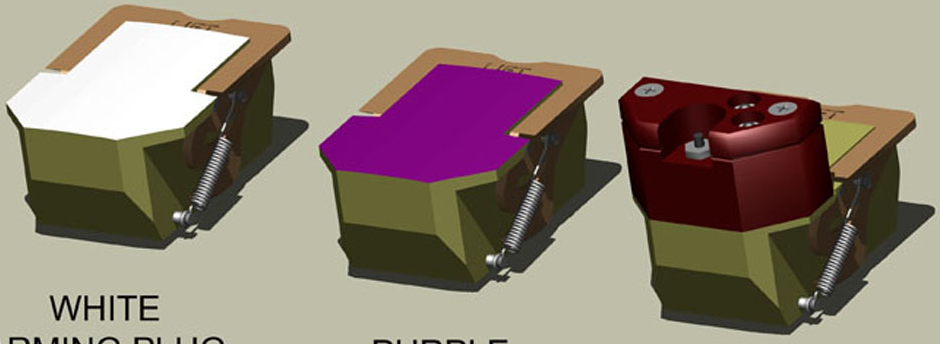

WHITE
ARMING PLUG
CONVENTIONAL
WARHEAD

PURPLE
ARMING PLUG
NUCLEAR
WARHEAD

GREEN
SAFING PLUG
NUCLEAR
WARHEAD

Copyright © 2008 Phillip R. Hays

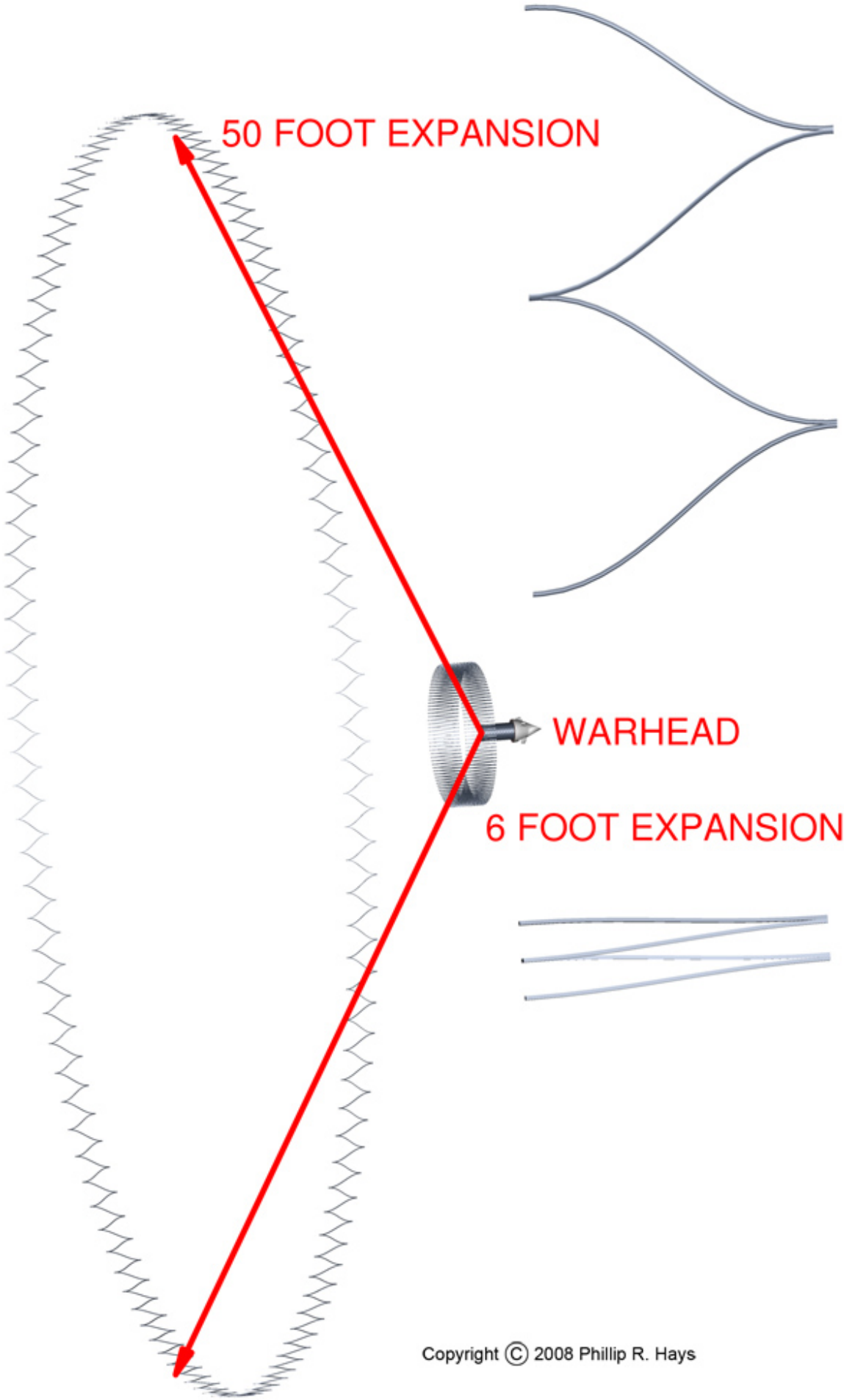

Copyright © 2008 Phillip R. Hays

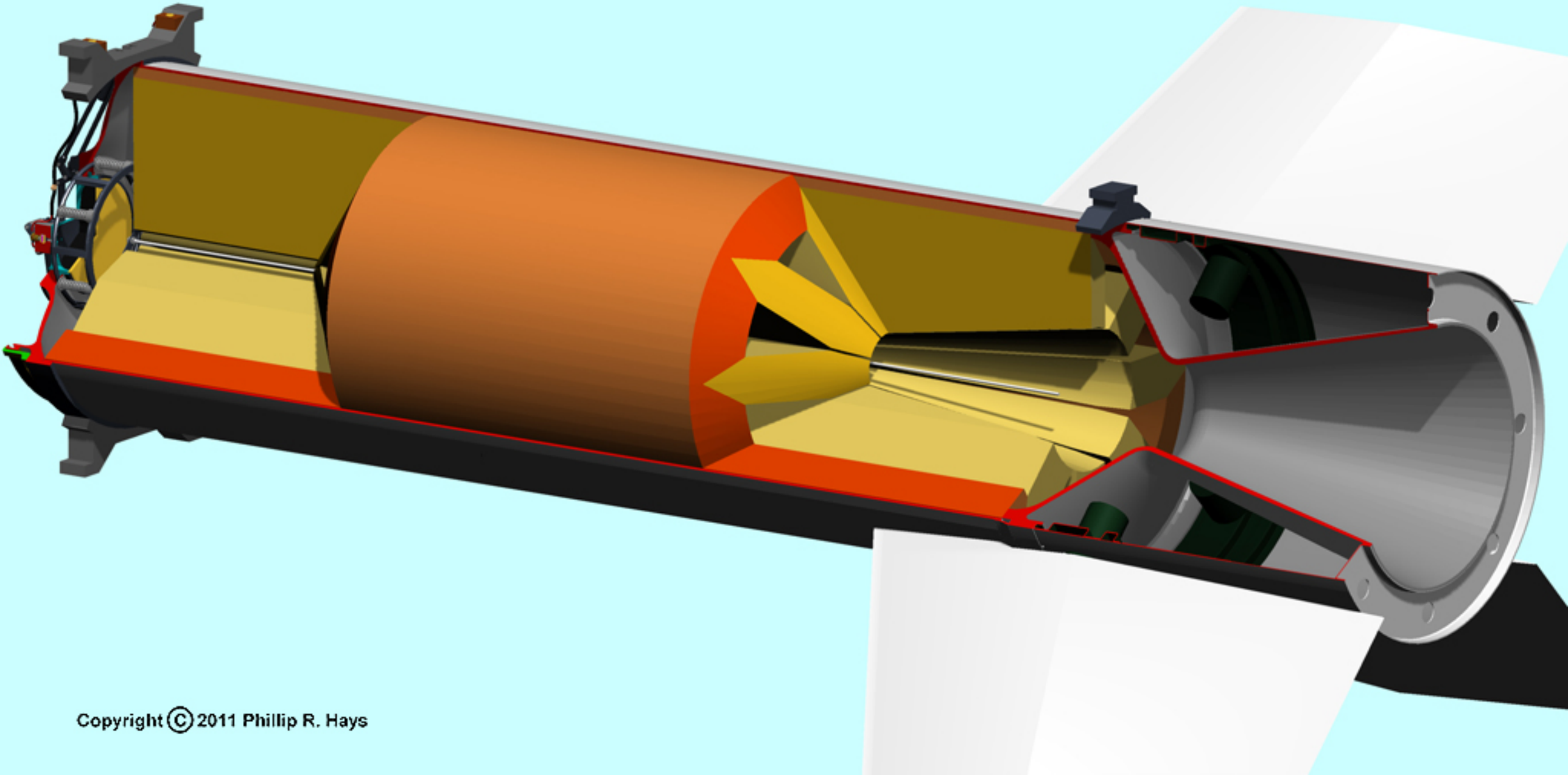

Copyright © 2011 Phillip R. Hays

TALOS RIM-8E - RIM-8J

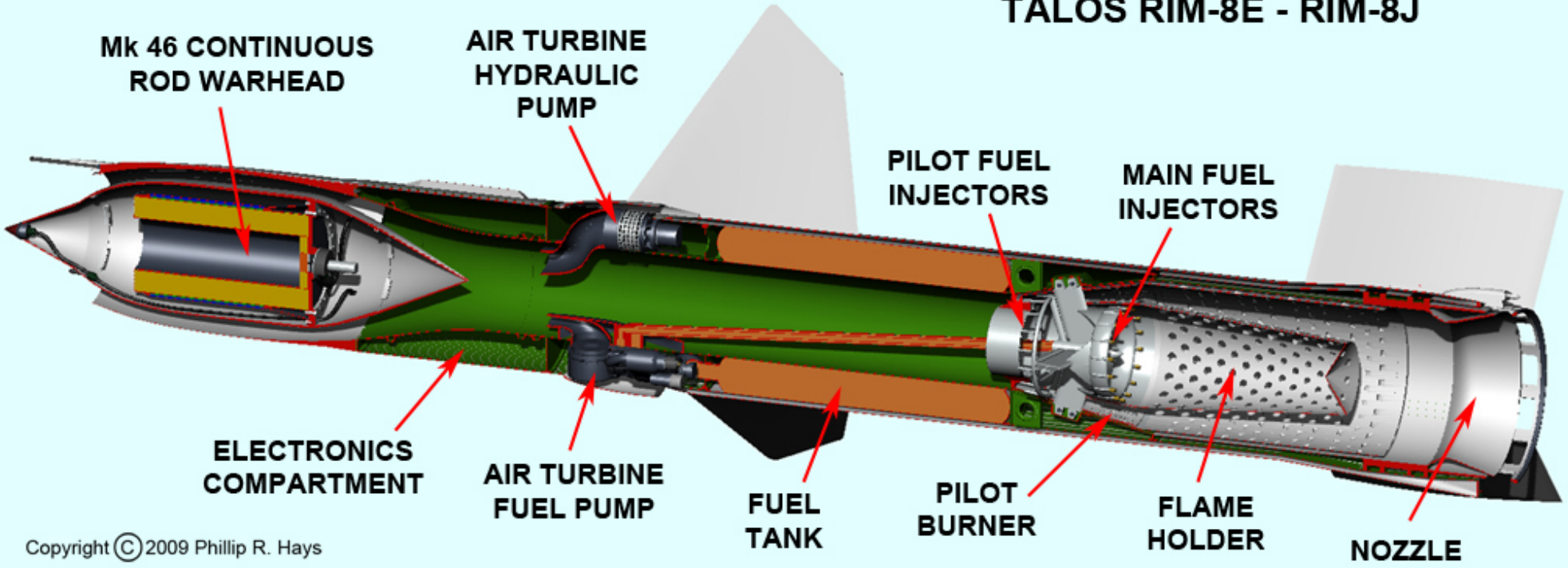

Copyright © 2009 Phillip R. Hays

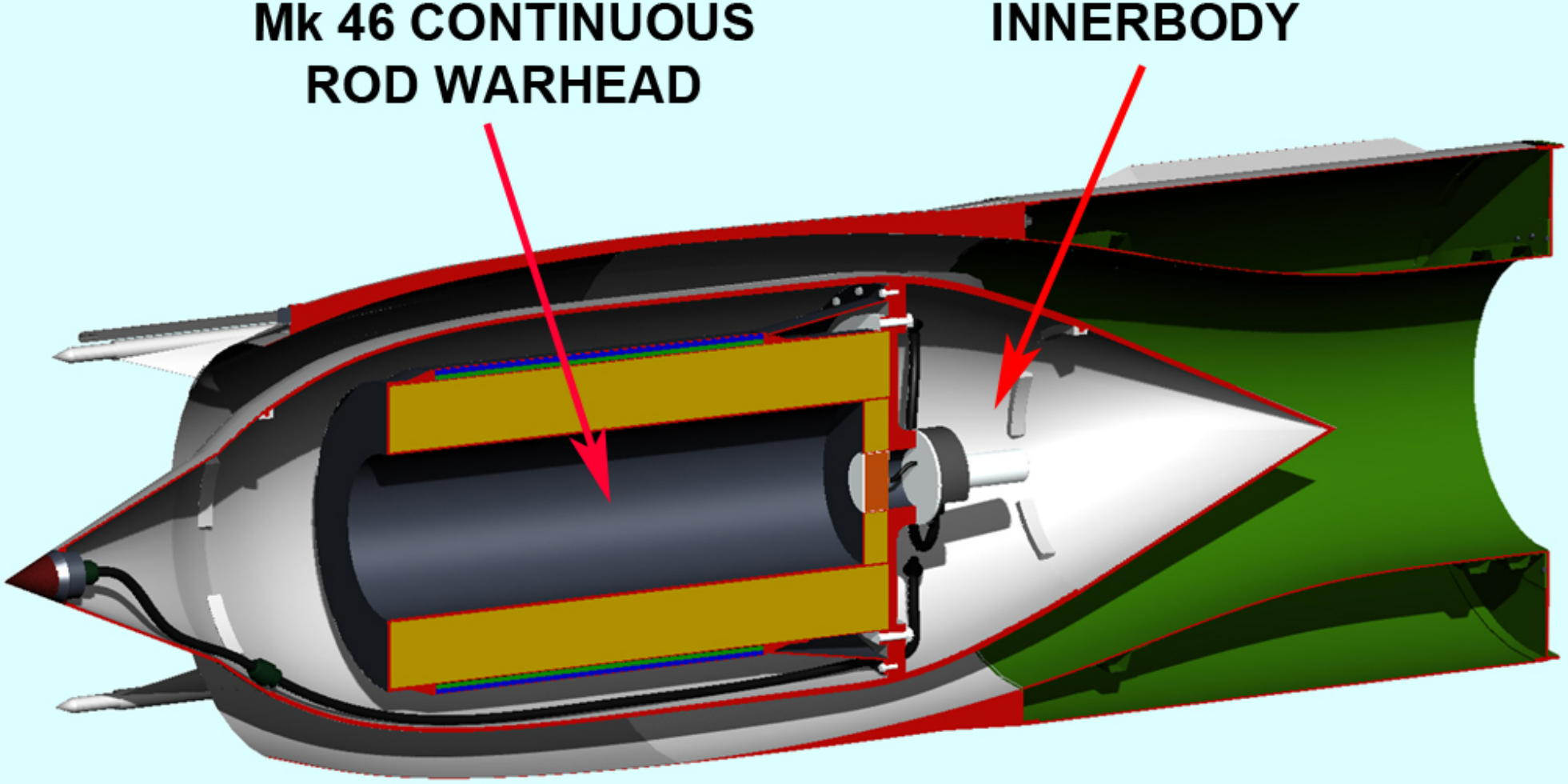

RIM-8G CONVENTIONAL WARHEAD

Copyright © 2009 Phillip R. Hays

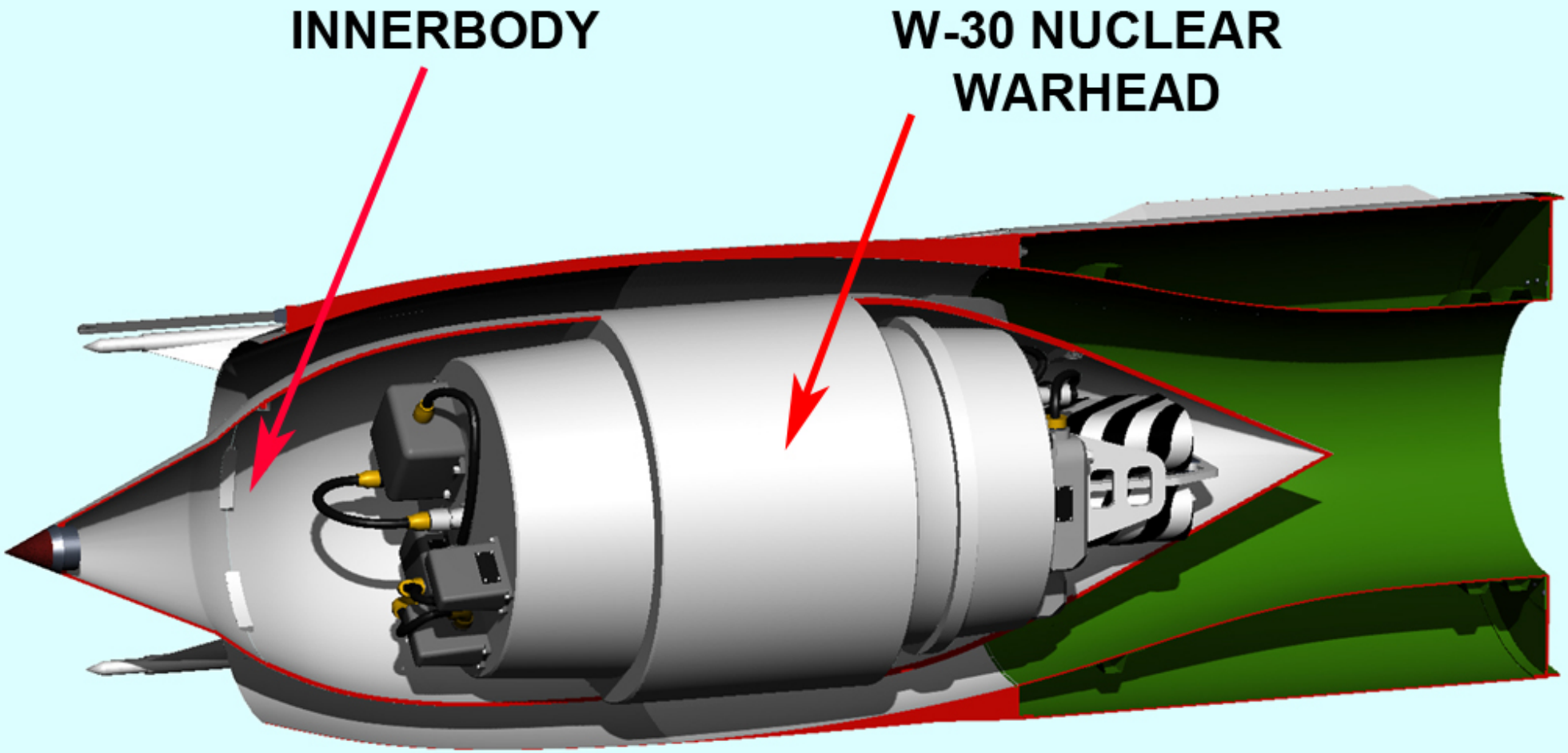

RIM-8G NUCLEAR WARHEAD

Copyright © 2009 Phillip R. Hays

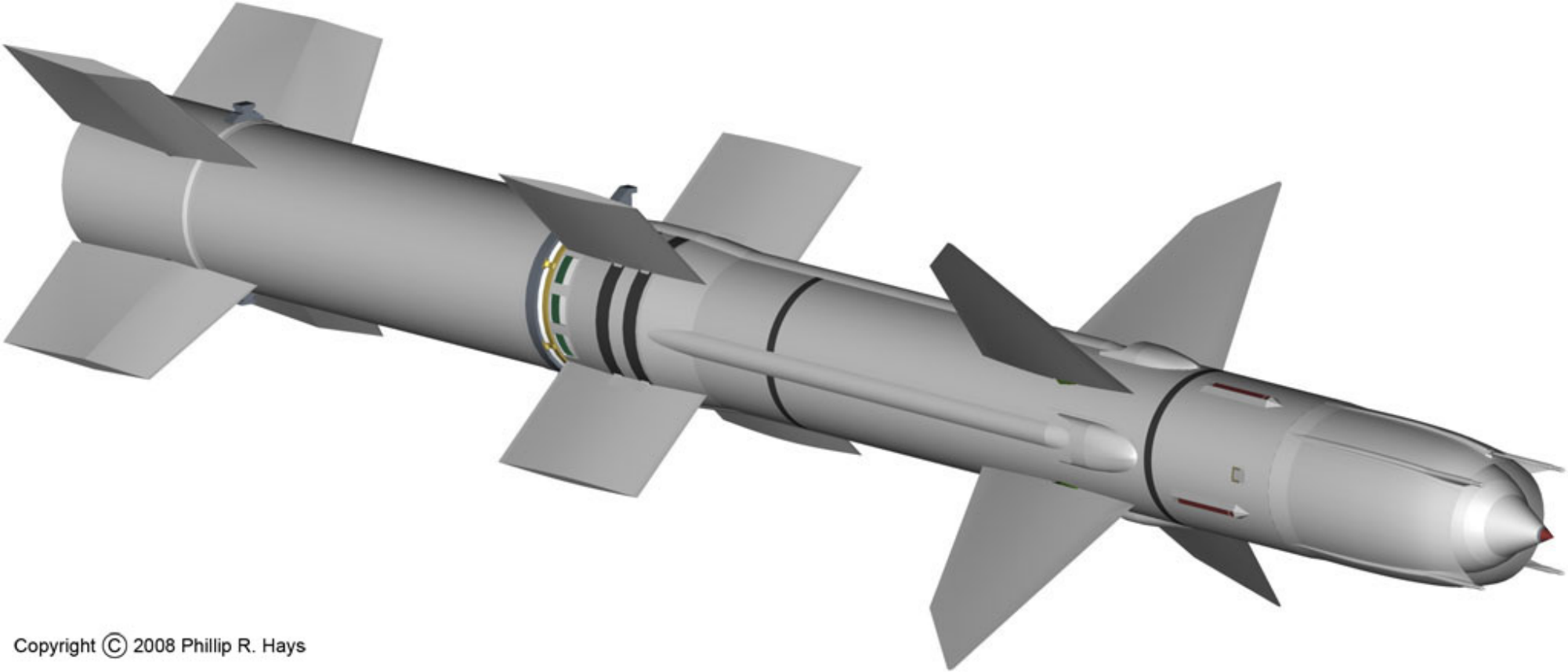

Copyright © 2008 Phillip R. Hays

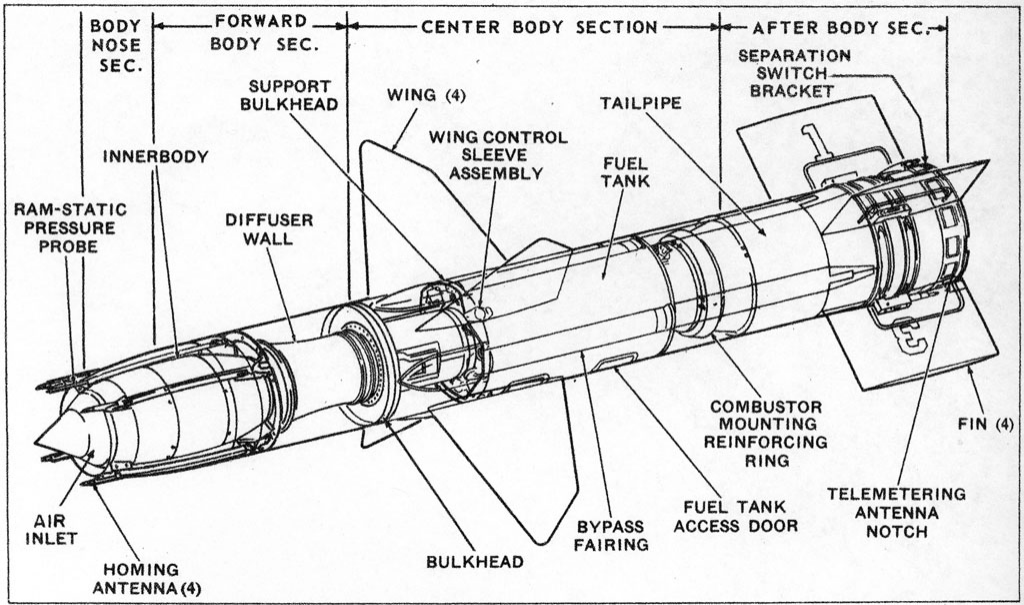
BODY NOSE SEC.
FORWARD BODY SEC.
CENTER BODY SECTION
AFTER BODY SEC.
SEPARATION SWITCH BRACKET
SUPPORT BULKHEAD
WING (4)
TAILPIPE
WING CONTROL SLEEVE ASSEMBLY
INNERBODY
FUEL TANK
RAM-STATIC PRESSURE PROBE
DIFFUSER WALL
COMBUSTOR MOUNTING REINFORCING RING
FIN (4)
AIR INLET
HOMING ANTENNA (4)
BULKHEAD
BYPASS FAIRING
FUEL TANK ACCESS DOOR
TELEMETERING ANTENNA NOTCH

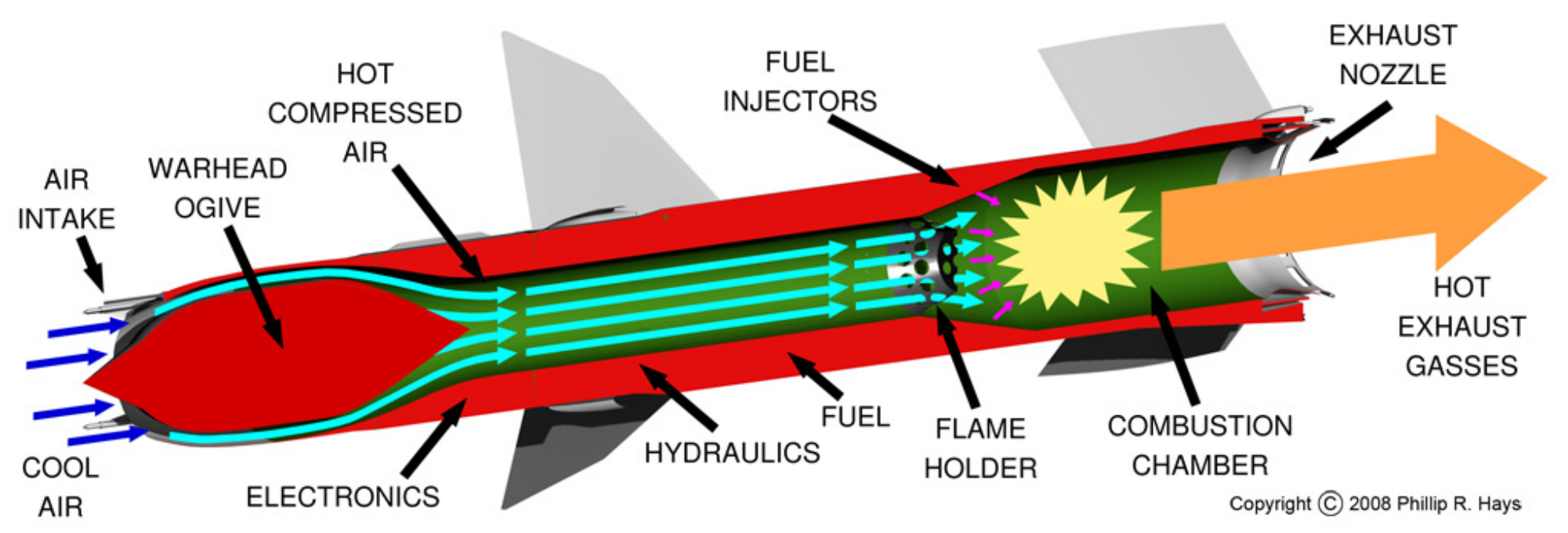
AIR INTAKE
WARHEAD OGIVE
HOT COMPRESSED AIR
FUEL INJECTORS
EXHAUST NOZZLE
HOT EXHAUST GASSES
COOL AIR
ELECTRONICS
HYDRAULICS
FUEL
FLAME HOLDER
COMBUSTION CHAMBER
Copyright © 2008 Phillip R. Hays

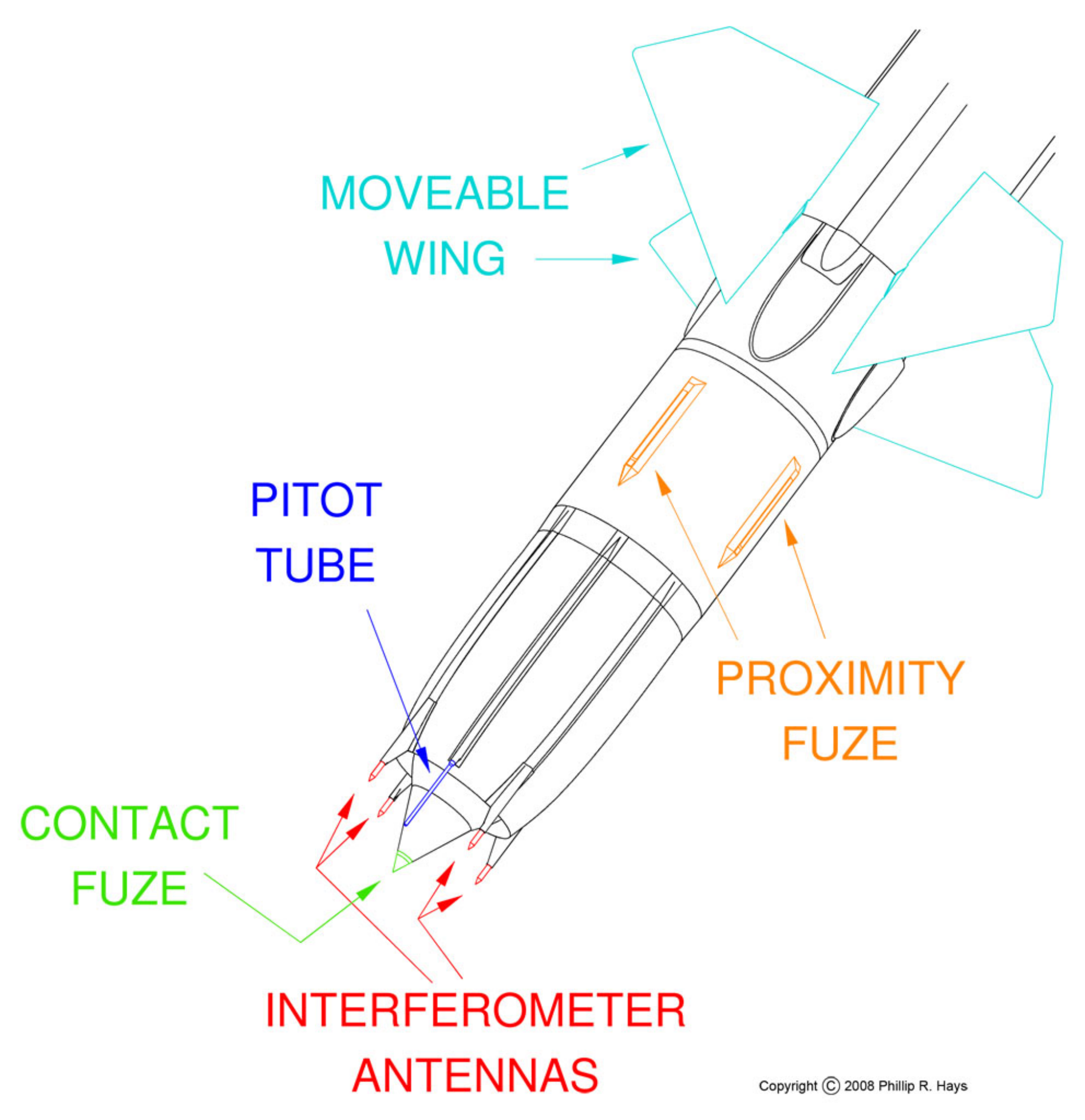

Copyright © 2008 Phillip R. Hays

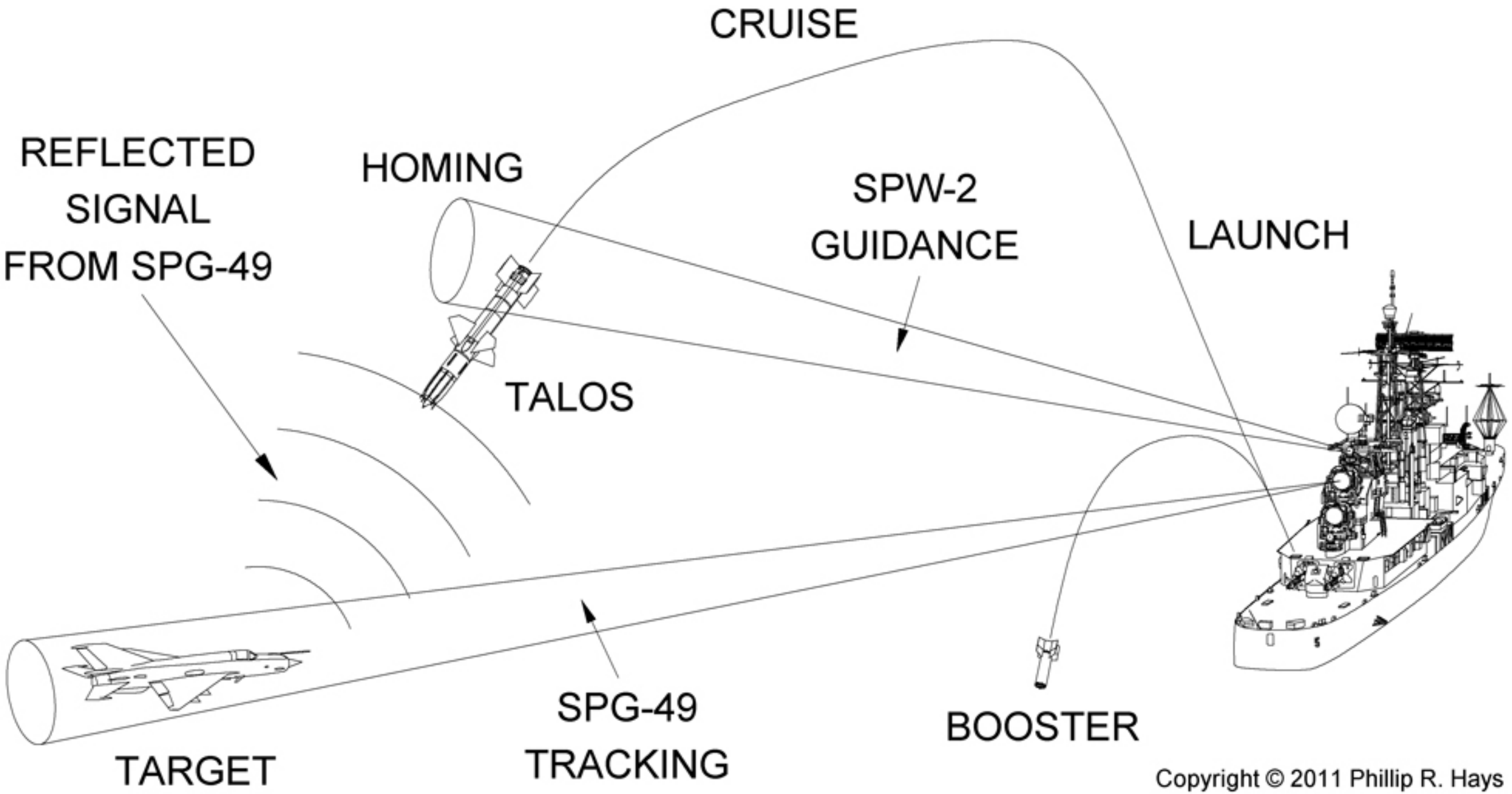

Copyright © 2011 Phillip R. Hays

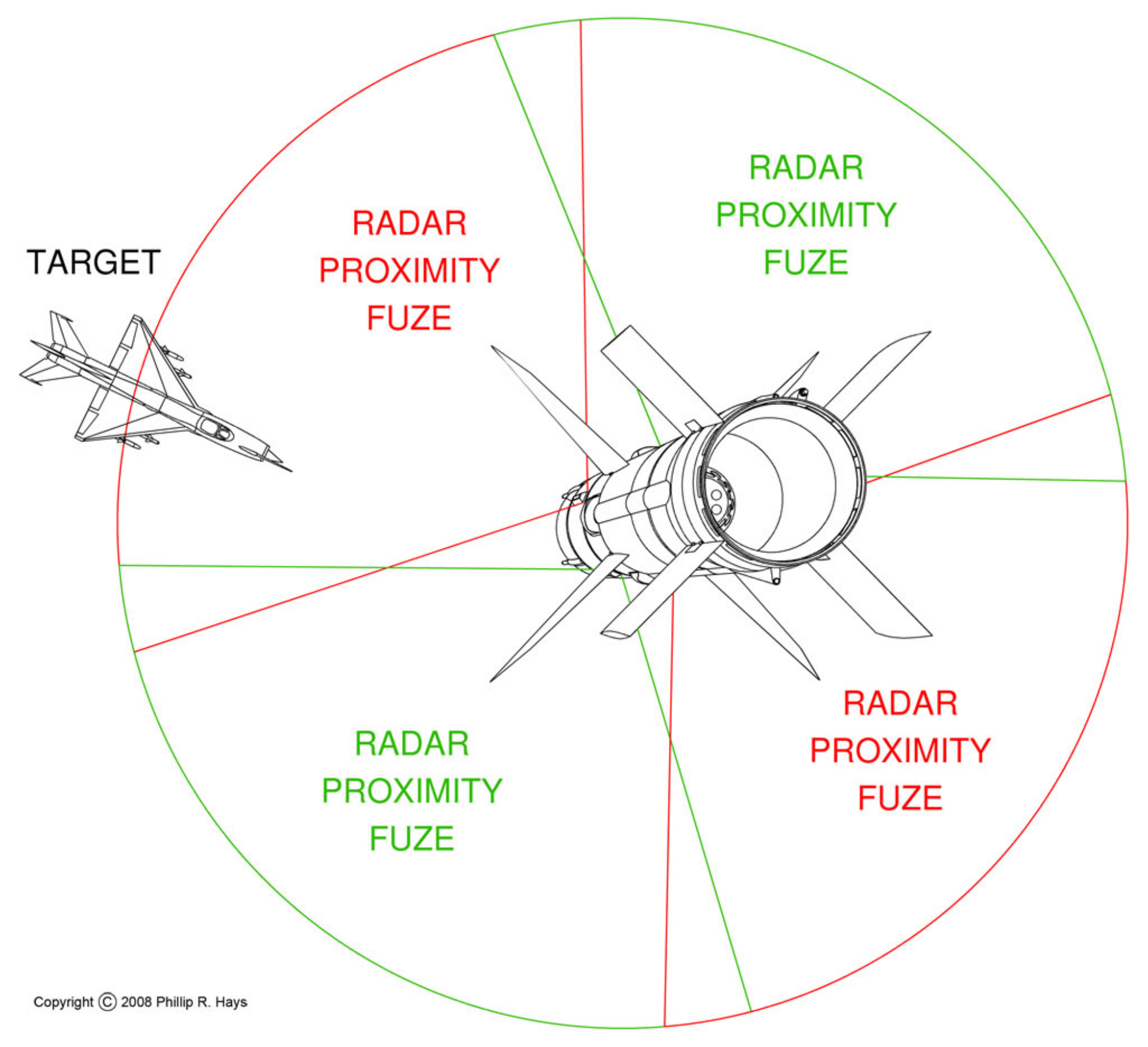

Copyright © 2008 Phillip R. Hays

AREA 1
SPECIAL WEAPONS OFFICE AND WARHEAD MAGAZINE

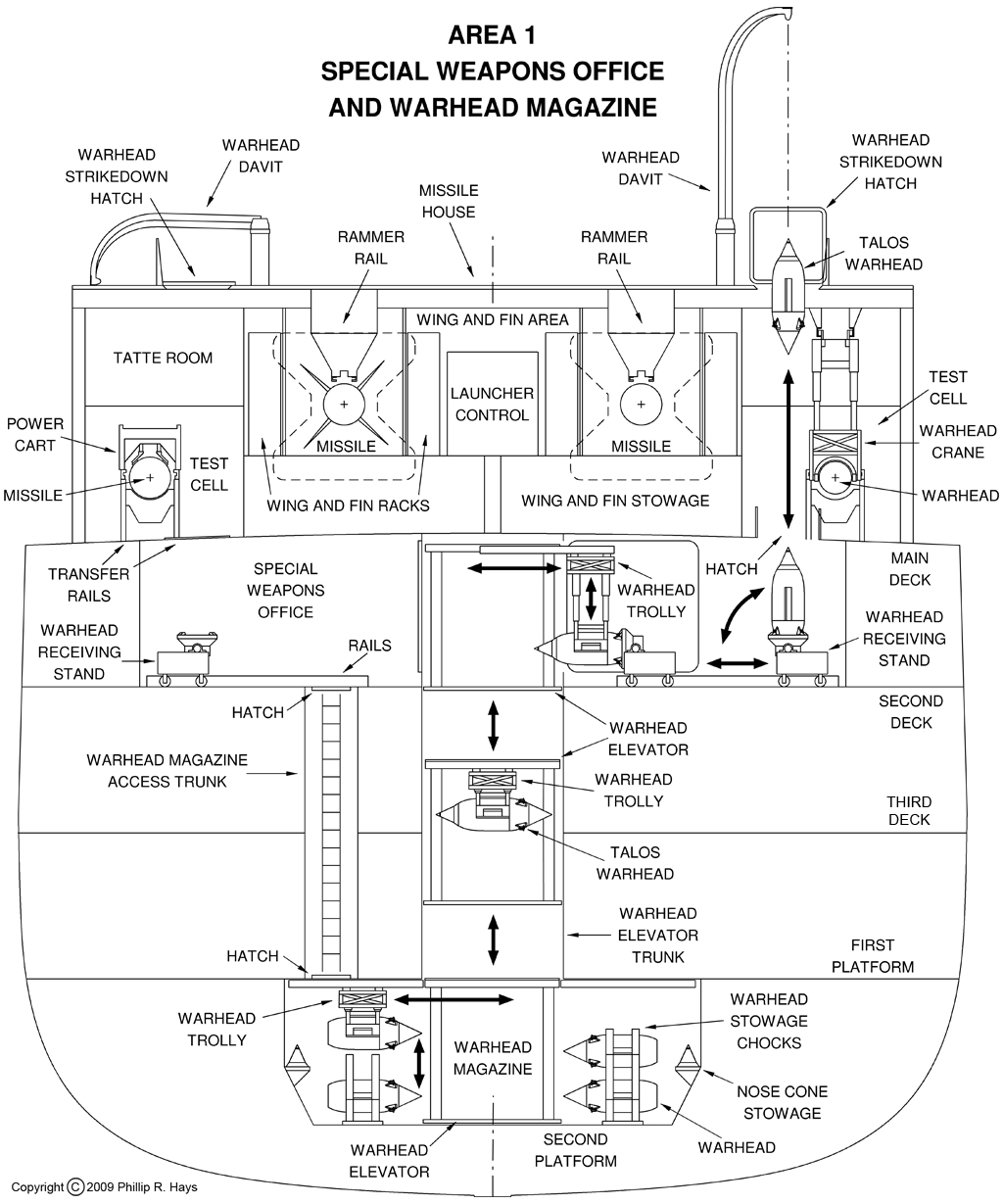

Copyright © 2009 Phillip R. Hays

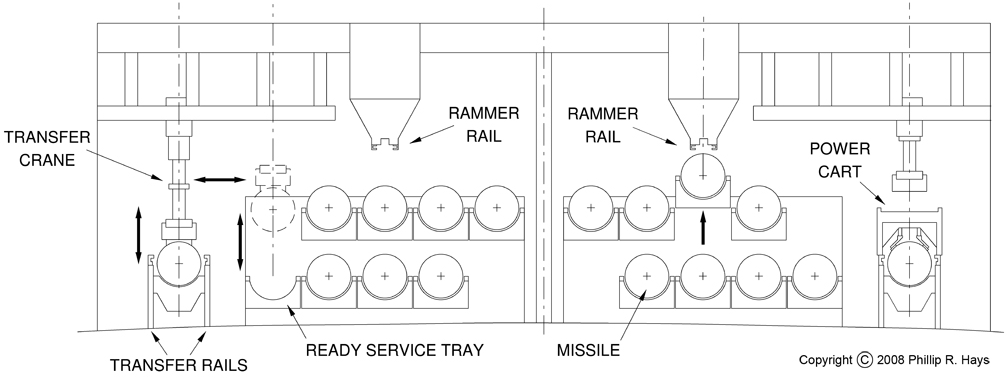

Copyright © 2008 Phillip R. Hays

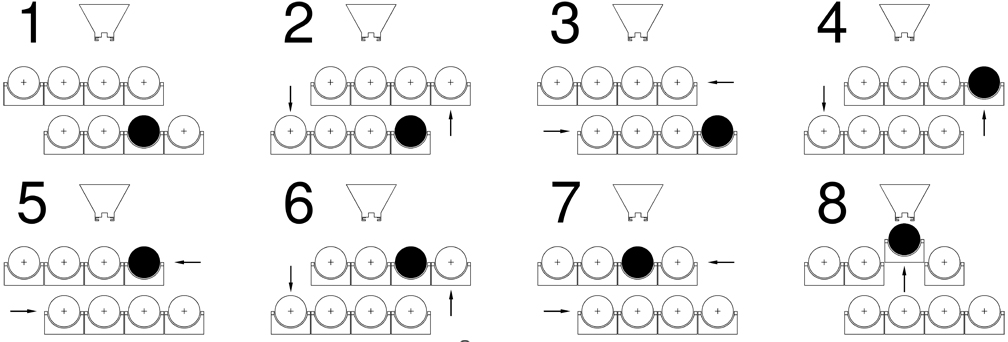

Copyright © 2008 Phillip R. Hays

Copyright © 2008 Phillip R. Hays

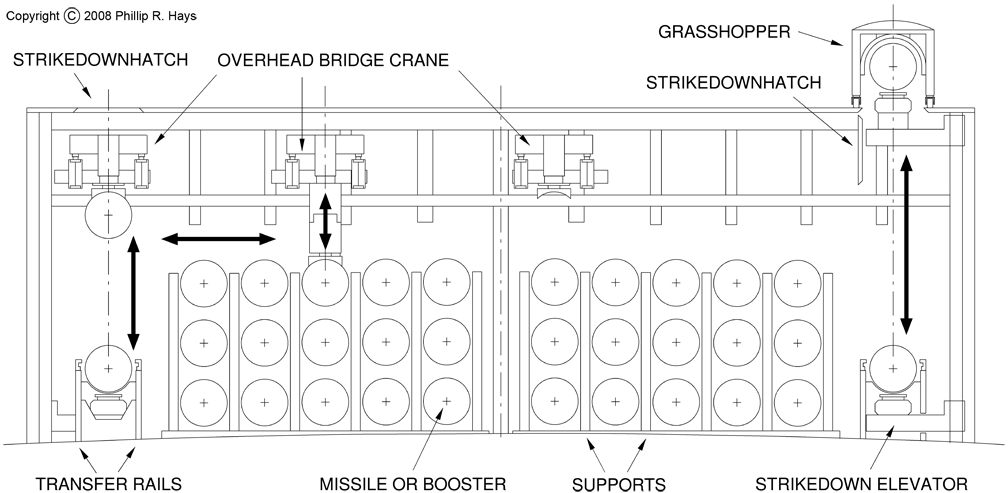

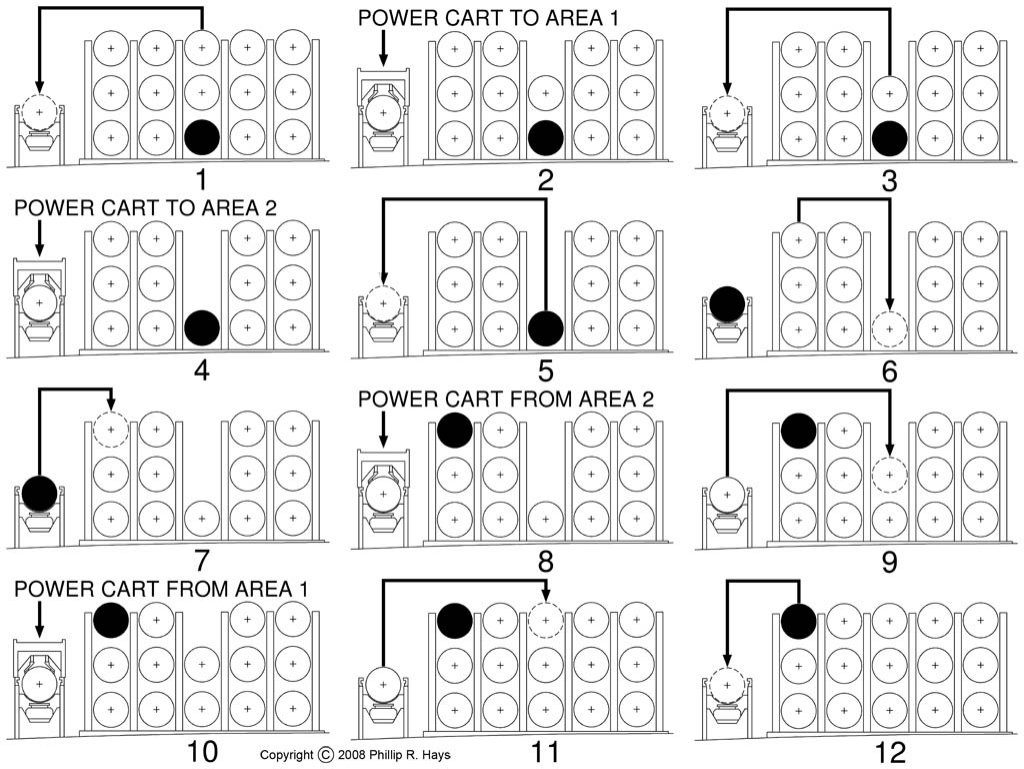

Copyright © 2008 Phillip R. Hays

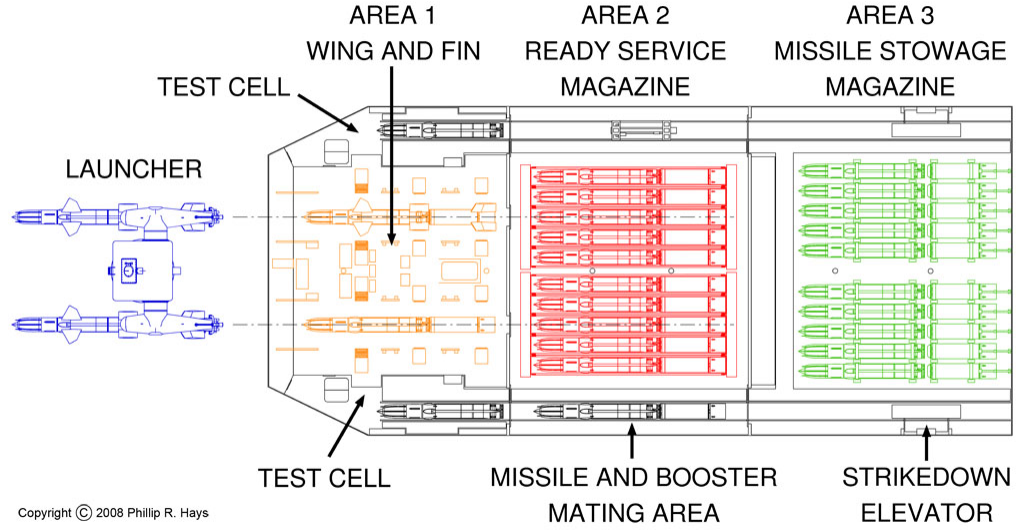

Copyright © 2008 Phillip R. Hays

Copyright © 2008 Phillip R. Hays

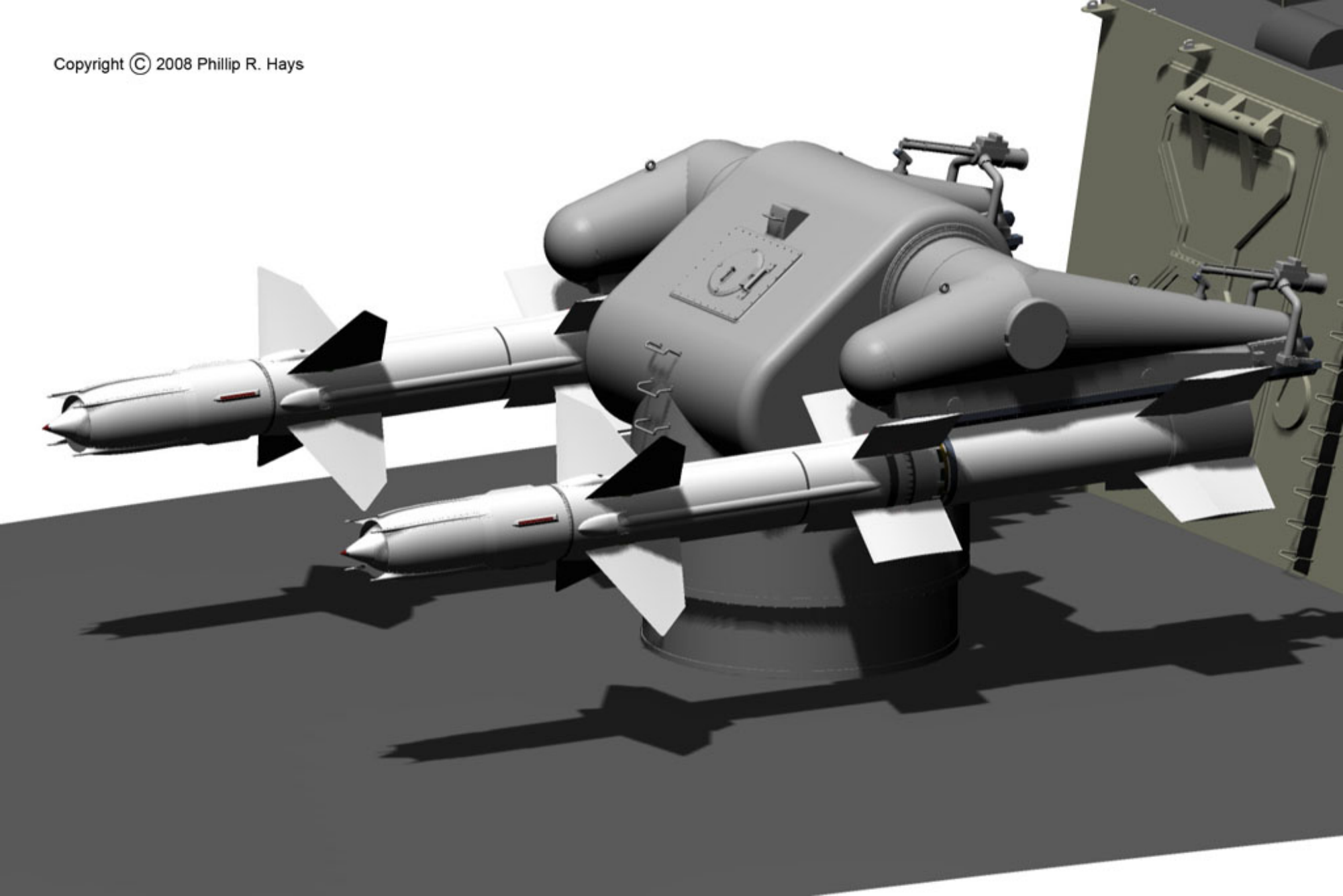

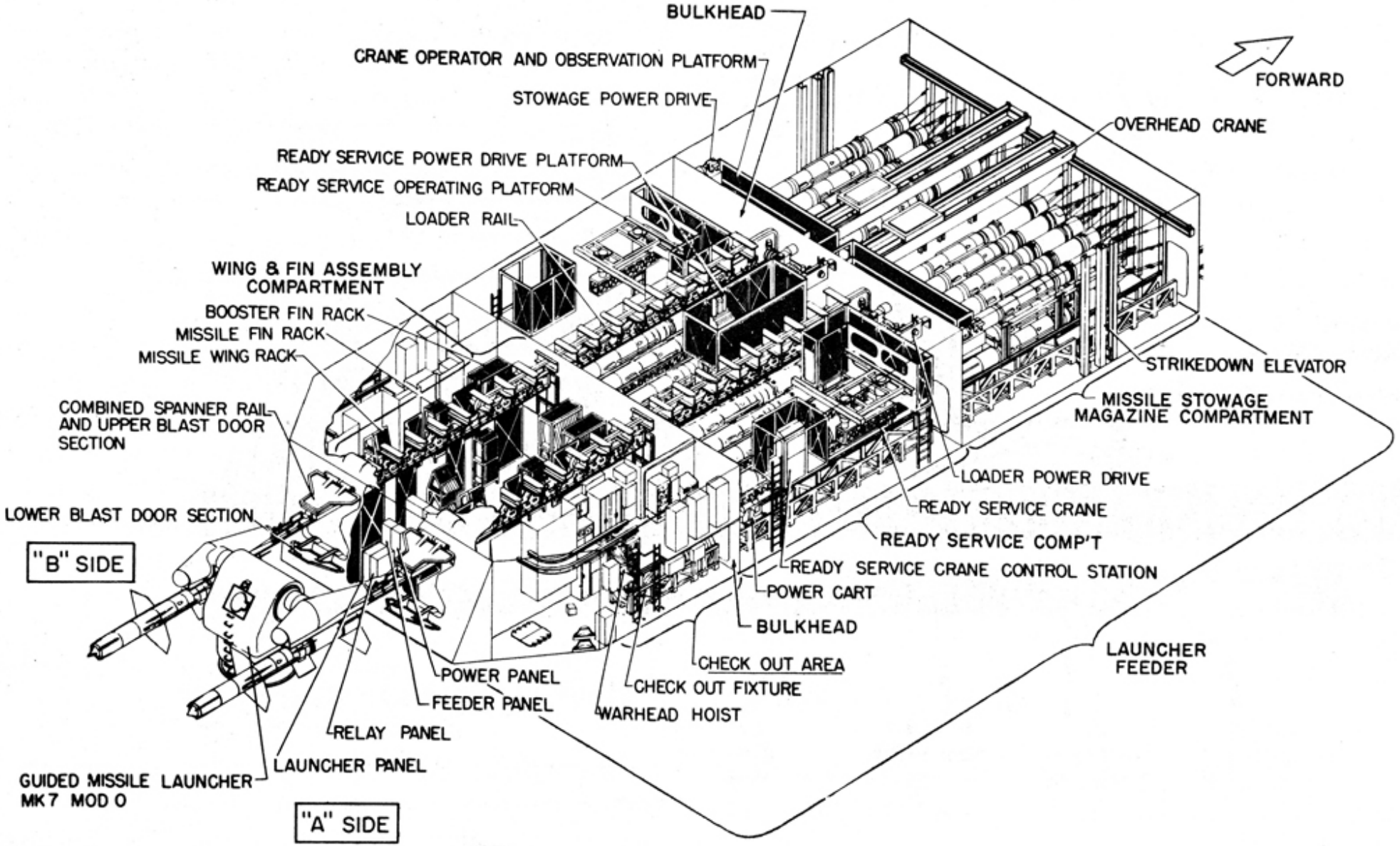
BULKHEAD
CRANE OPERATOR AND OBSERVATION PLATFORM
STOWAGE POWER DRIVE
FORWARD
OVERHEAD CRANE
READY SERVICE POWER DRIVE PLATFORM
READY SERVICE OPERATING PLATFORM
LOADER RAIL
WING & FIN ASSEMBLY COMPARTMENT
BOOSTER FIN RACK
MISSILE FIN RACK
MISSILE WING RACK
STRIKEDOWN ELEVATOR
COMBINED SPANNER RAIL AND UPPER BLAST DOOR SECTION
MISSILE STOWAGE MAGAZINE COMPARTMENT
LOADER POWER DRIVE
LOWER BLAST DOOR SECTION
READY SERVICE CRANE
"B" SIDE
READY SERVICE COMP'T
READY SERVICE CRANE CONTROL STATION
POWER CART
BULKHEAD
LAUNCHER FEEDER
CHECK OUT AREA
POWER PANEL
CHECK OUT FIXTURE
FEEDER PANEL
WARHEAD HOIST
RELAY PANEL
LAUNCHER PANEL
GUIDED MISSILE LAUNCHER MK 7 MOD 0
"A" SIDE

Additional generators could be brought on line when power demand increased. For example, an additional t
be brought on line when the 3 megawatt Talos AN/SPG-49 missile tracking radars were powered up.

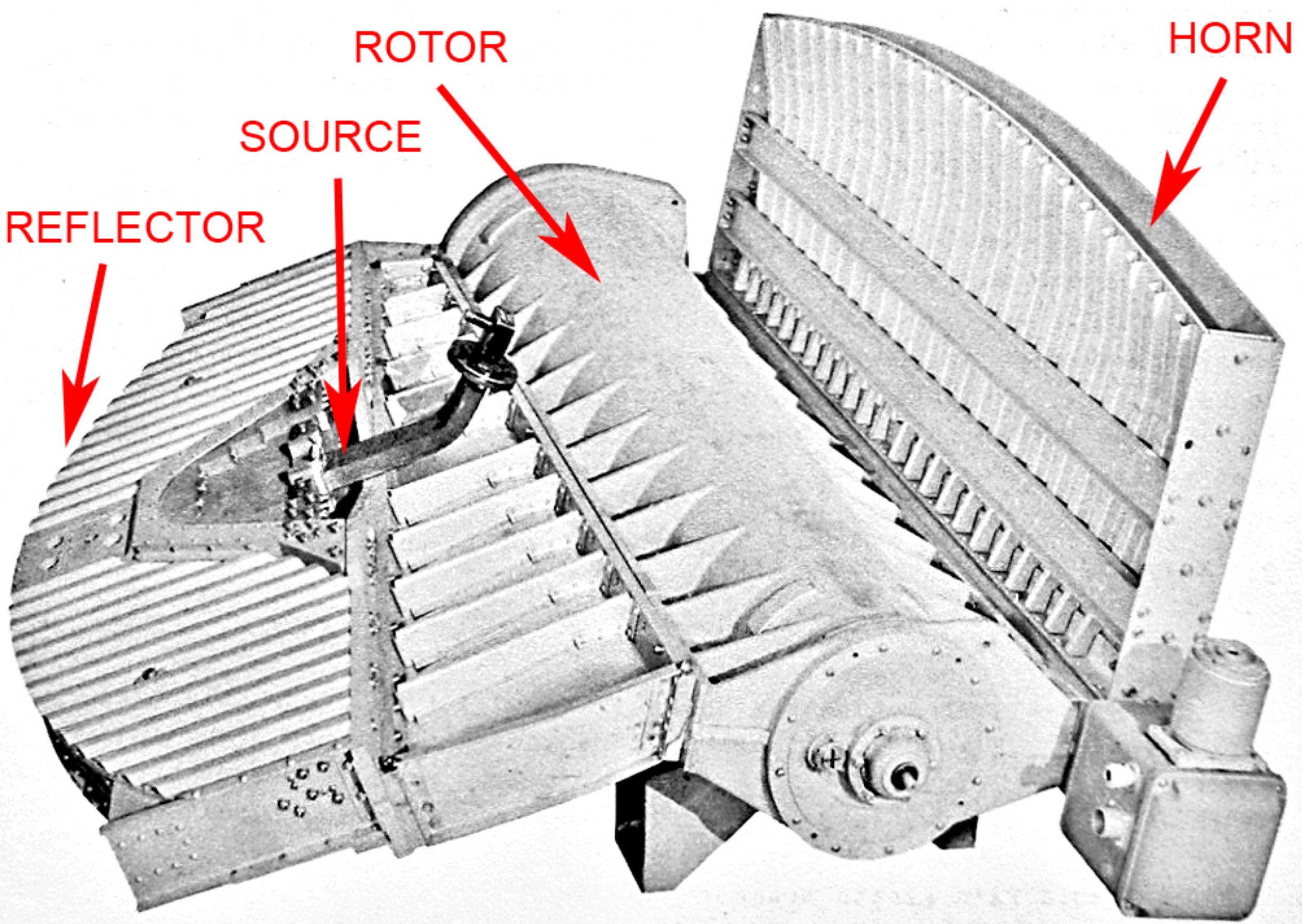
ROTOR
HORN
SOURCE
REFLECTOR

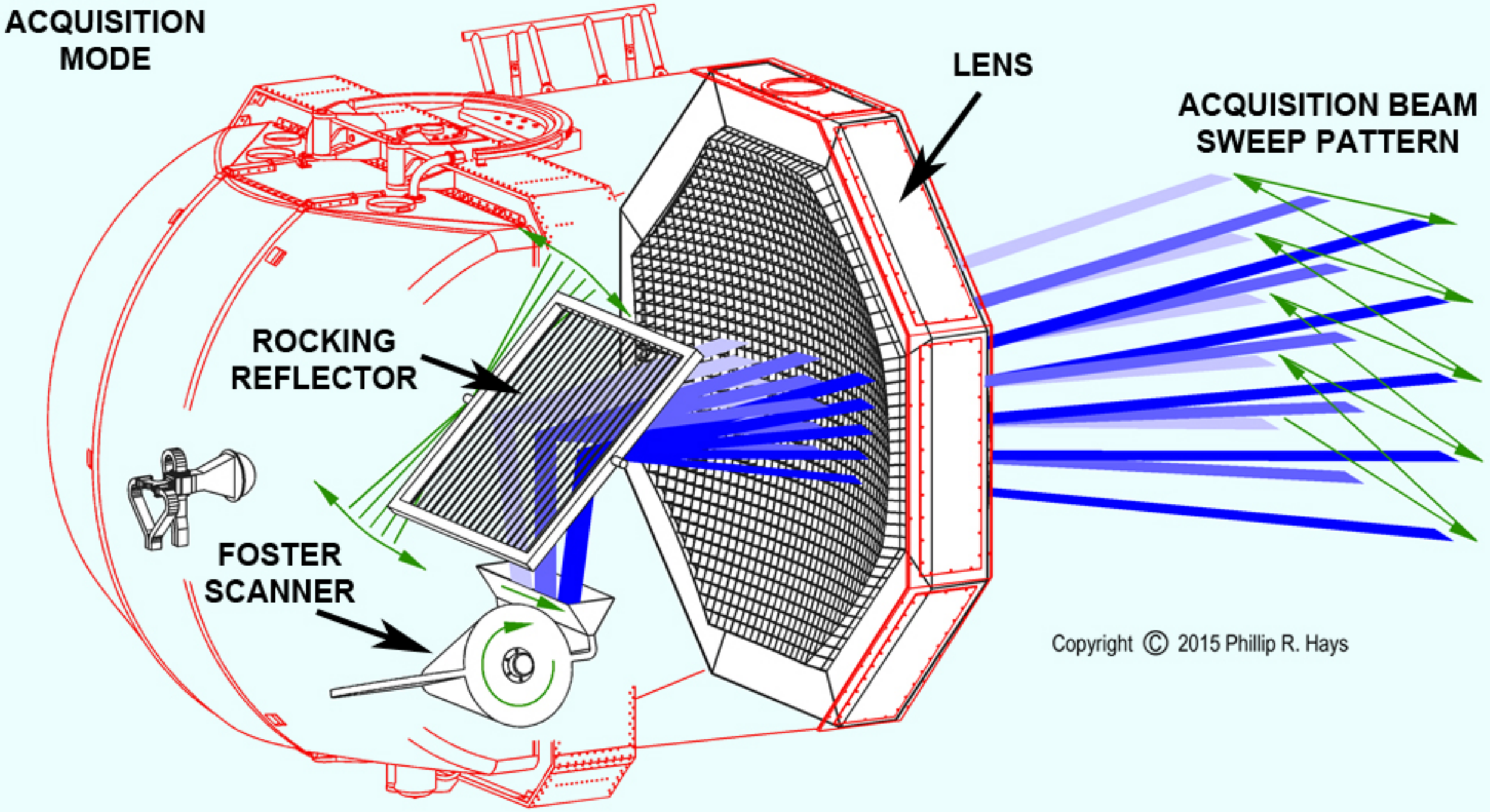
ACQUISITION MODE
LENS
ACQUISITION BEAM SWEEP PATTERN
ROCKING REFLECTOR
FOSTER SCANNER
Copyright © 2015 Phillip R. Hays

TARGET ELEVATION	TARGET BEARING	SIGNAL	[(A+B)-(C+D)]	[(B+C)-(A+D)]	ANTENNA AZIMUTH	ANTENNA TRAVERSE
LOW	CENTER		+	0	DOWN	NO CHANGE
LOW	LEFT		+	+	DOWN	LEFT
CENTER	LEFT		0	+	NO CHANGE	LEFT
HIGH	LEFT		−	+	UP	LEFT
HIGH	CENTER		−	0	UP	NO CHANGE
HIGH	RIGHT		−	−	UP	RIGHT
CENTER	RIGHT		0	−	NO CHANGE	RIGHT
LOW	RIGHT		+	−	DOWN	RIGHT
CENTER	CENTER		0	0	NO CHANGE	NO CHANGE

Copyright © 2014 Phillip R. Hays

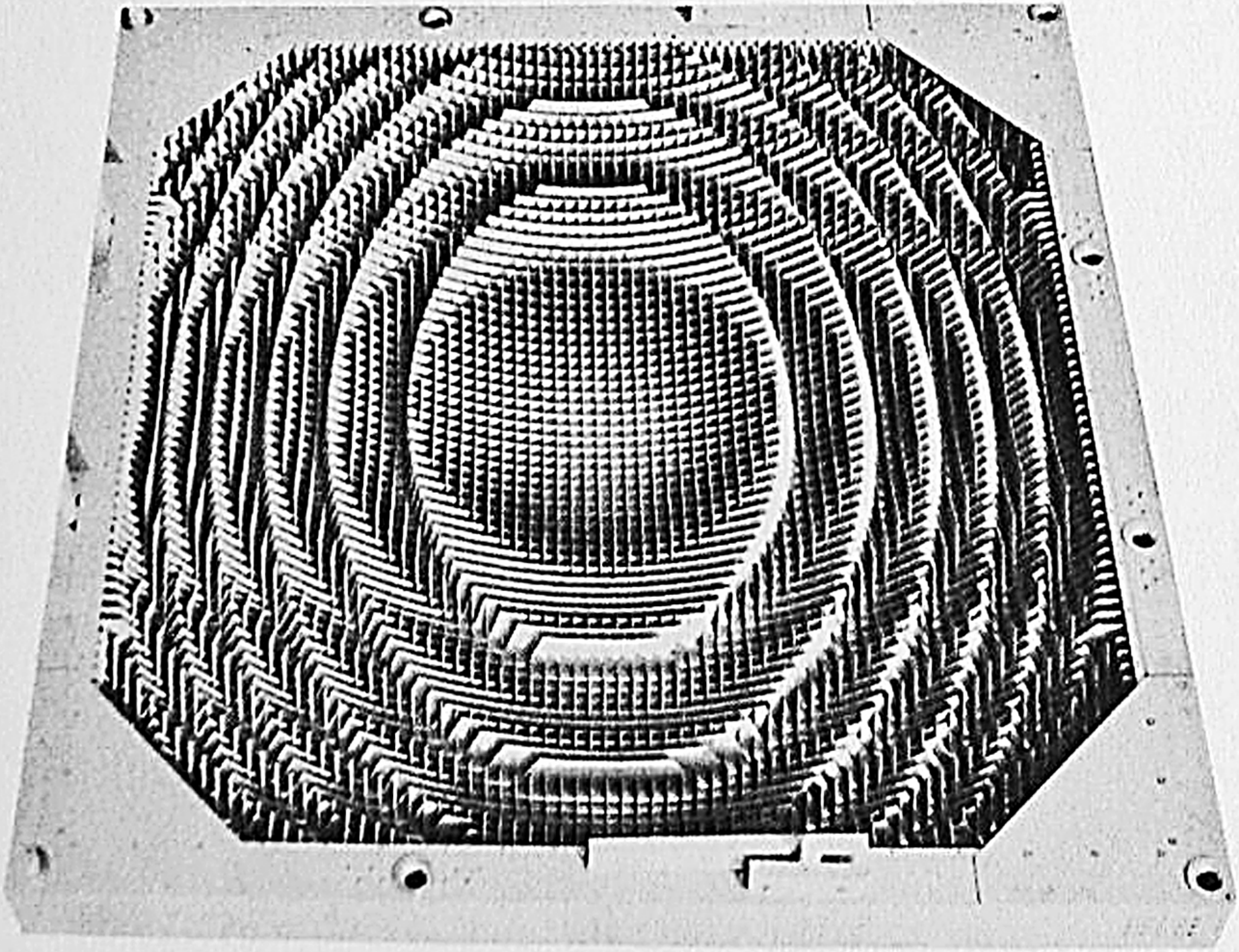

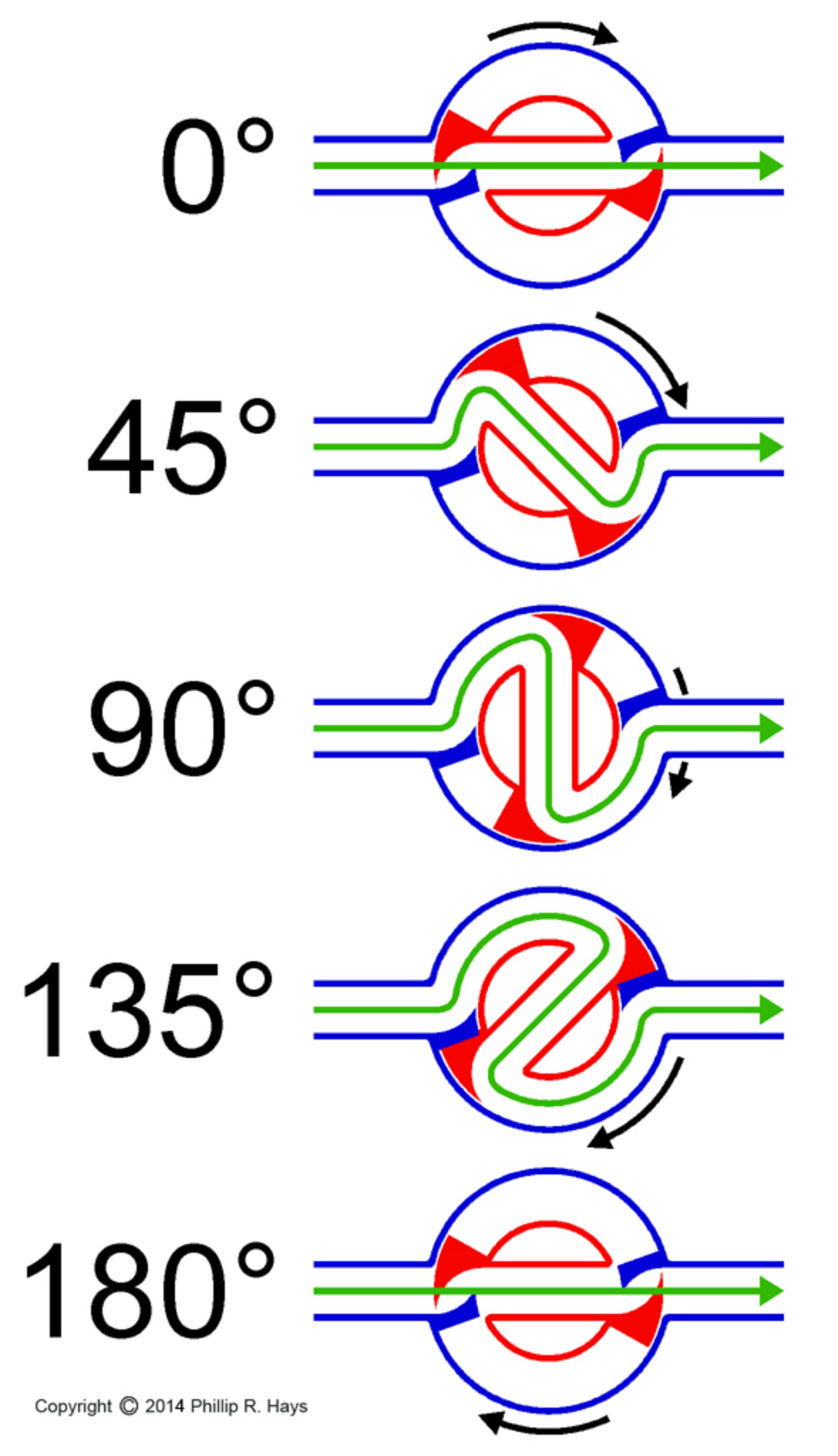

Copyright © 2014 Phillip R. Hays

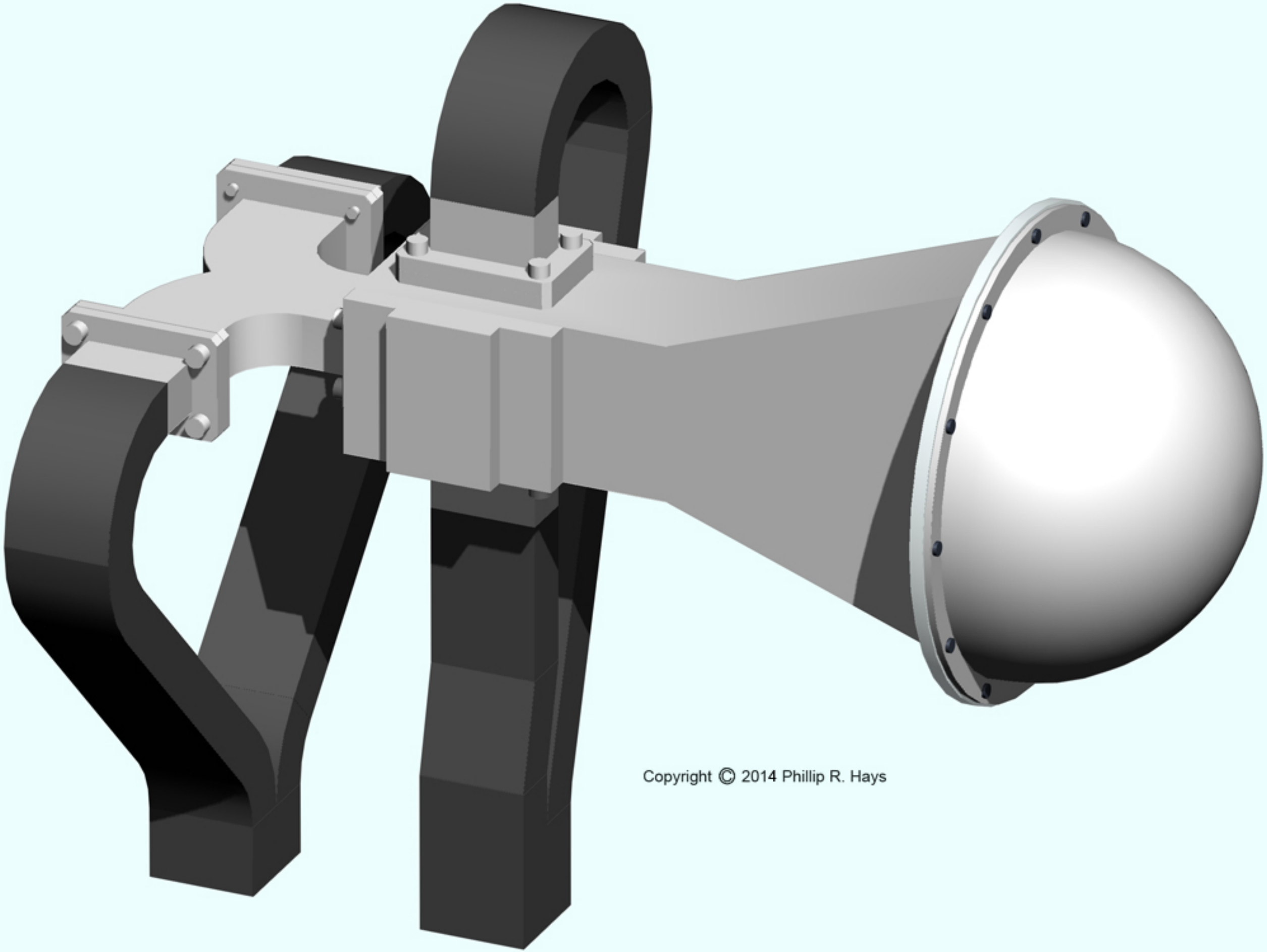

Copyright © 2014 Phillip R. Hays

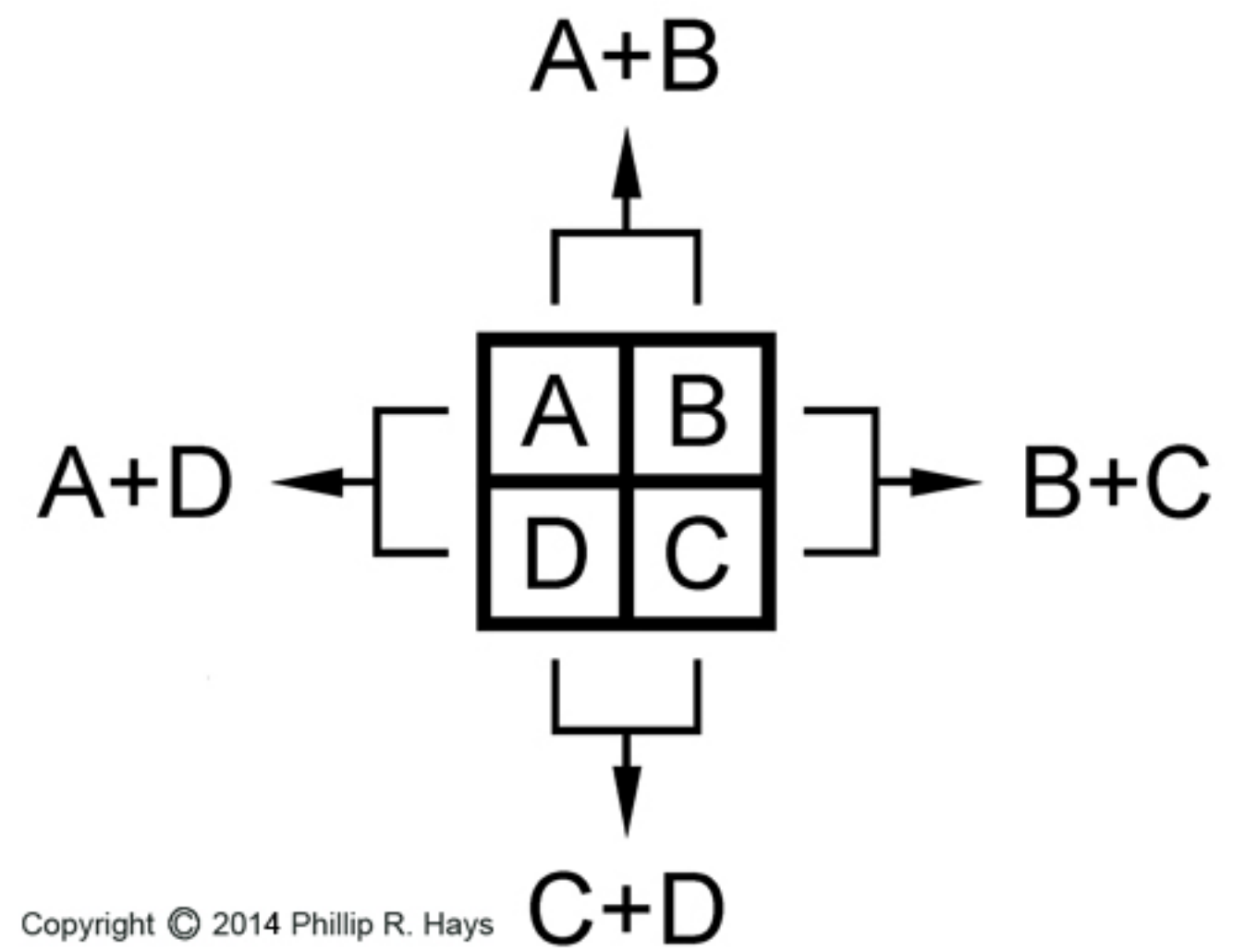

Copyright © 2014 Phillip R. Hays

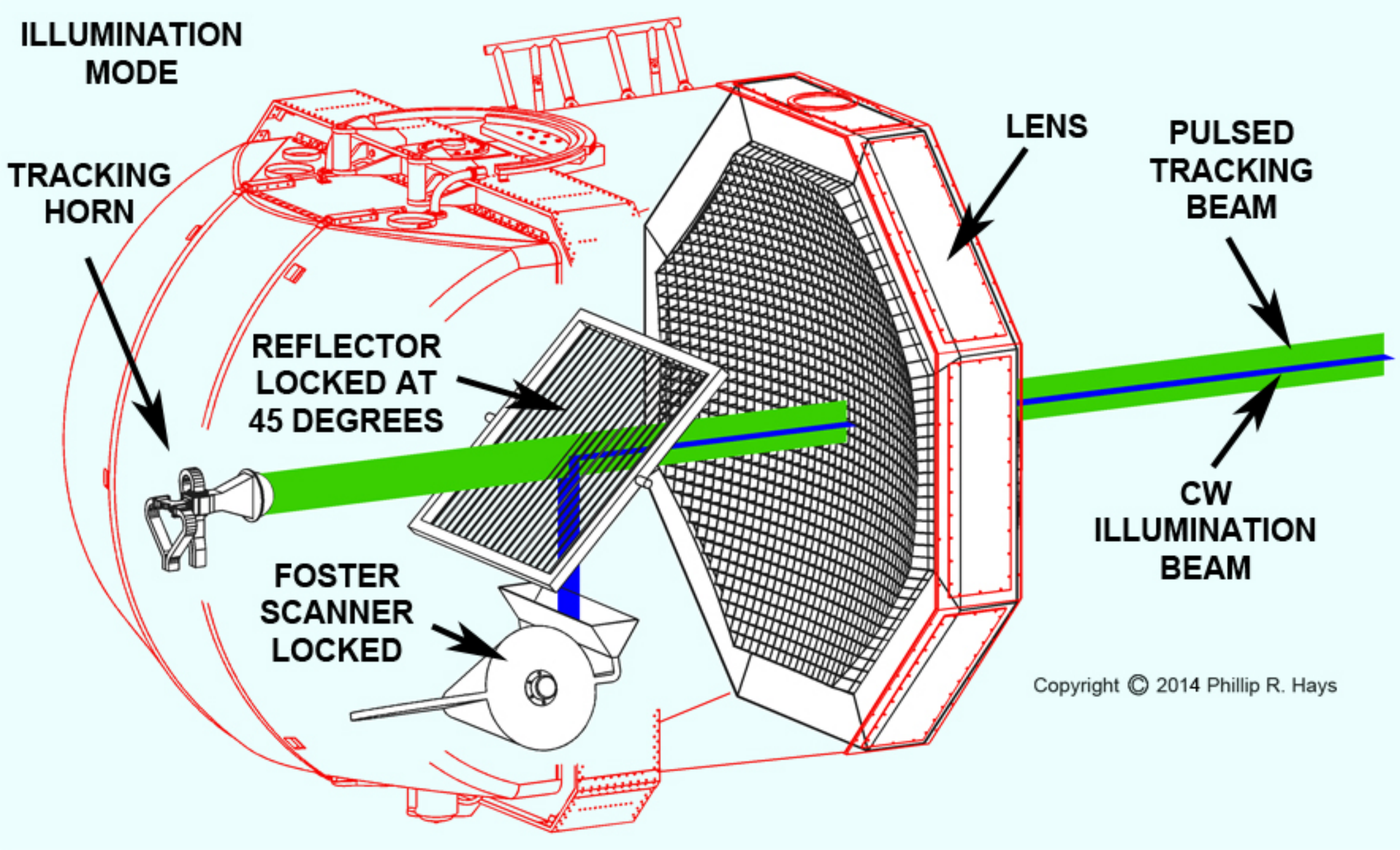

Copyright © 2014 Phillip R. Hays

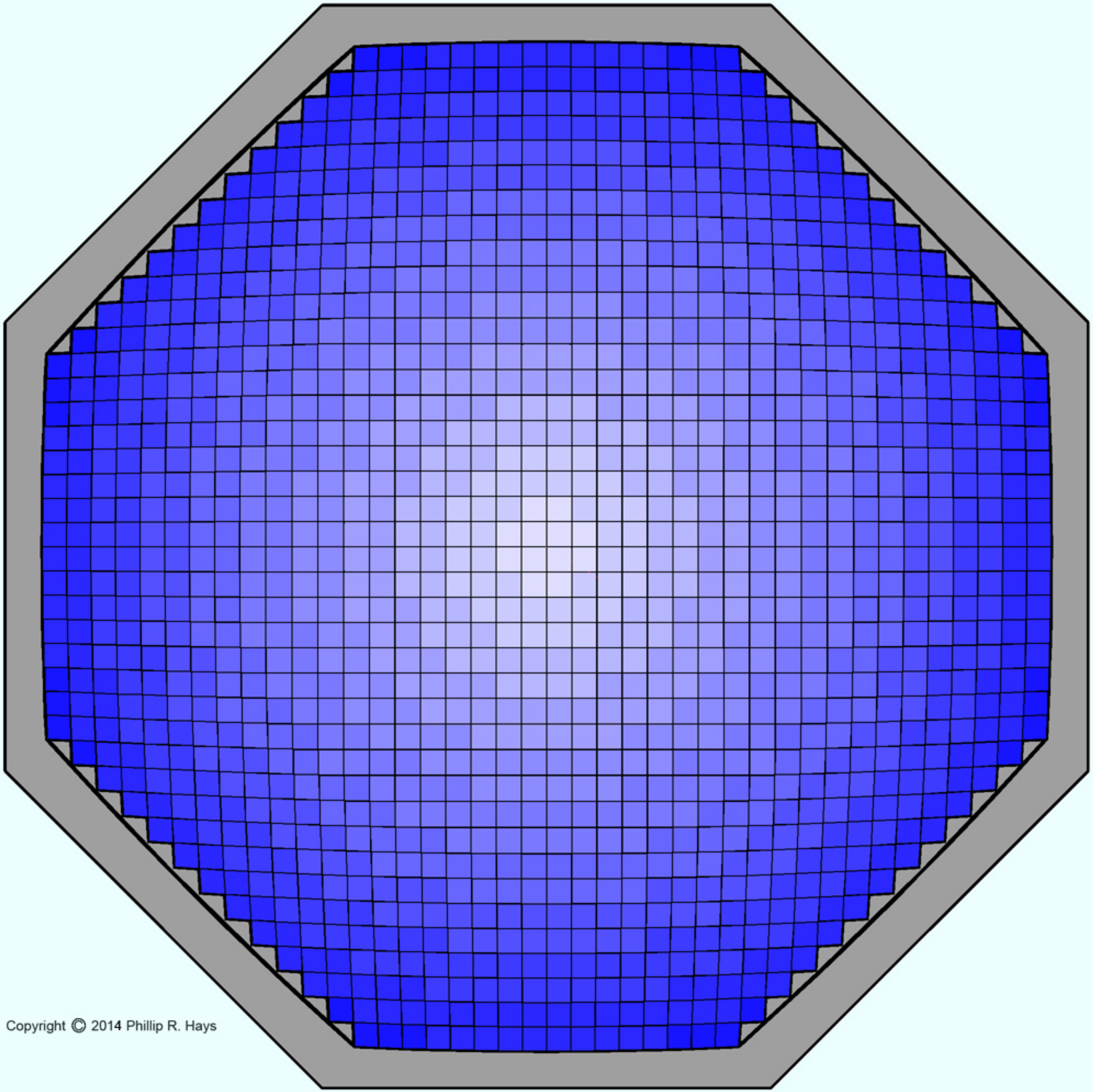

Copyright © 2014 Phillip R. Hays

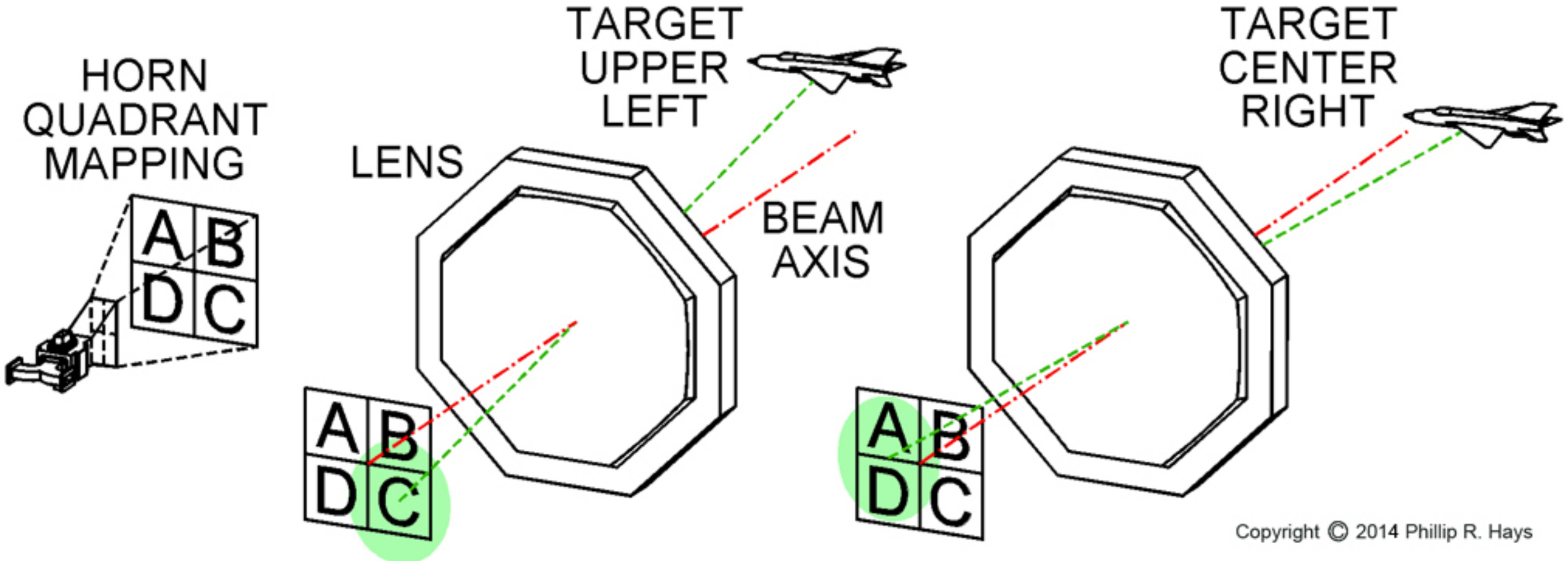

Copyright © 2014 Phillip R. Hays

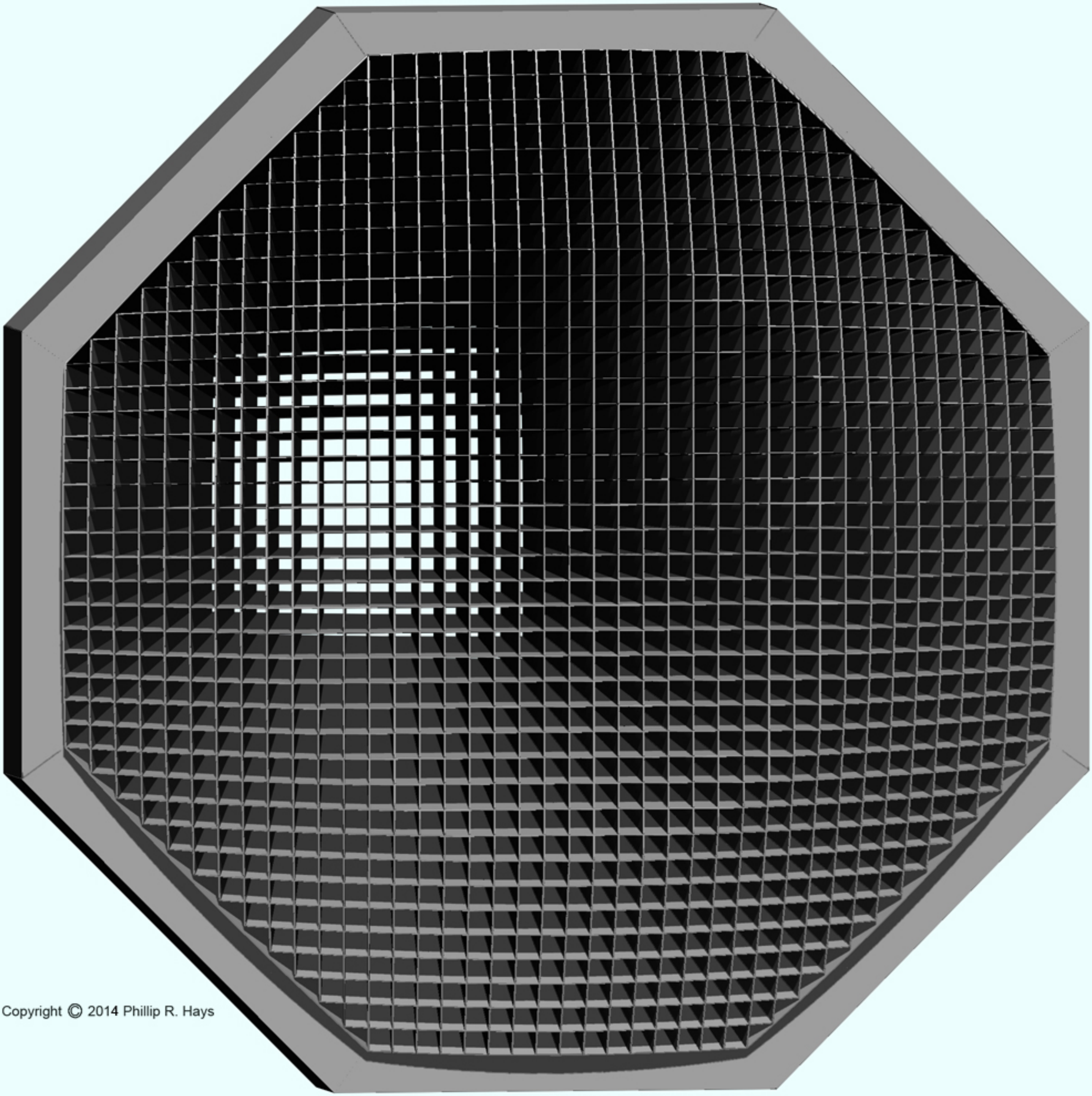

Copyright © 2014 Phillip R. Hays

MICROWAVE
LENS

TRACKING
HORN

A
B
C
D
E
F
F
E
D
C
B
A

TRANSMIT AND
RECEIVE PULSES

Copyright © 2014 Phillip R. Hays

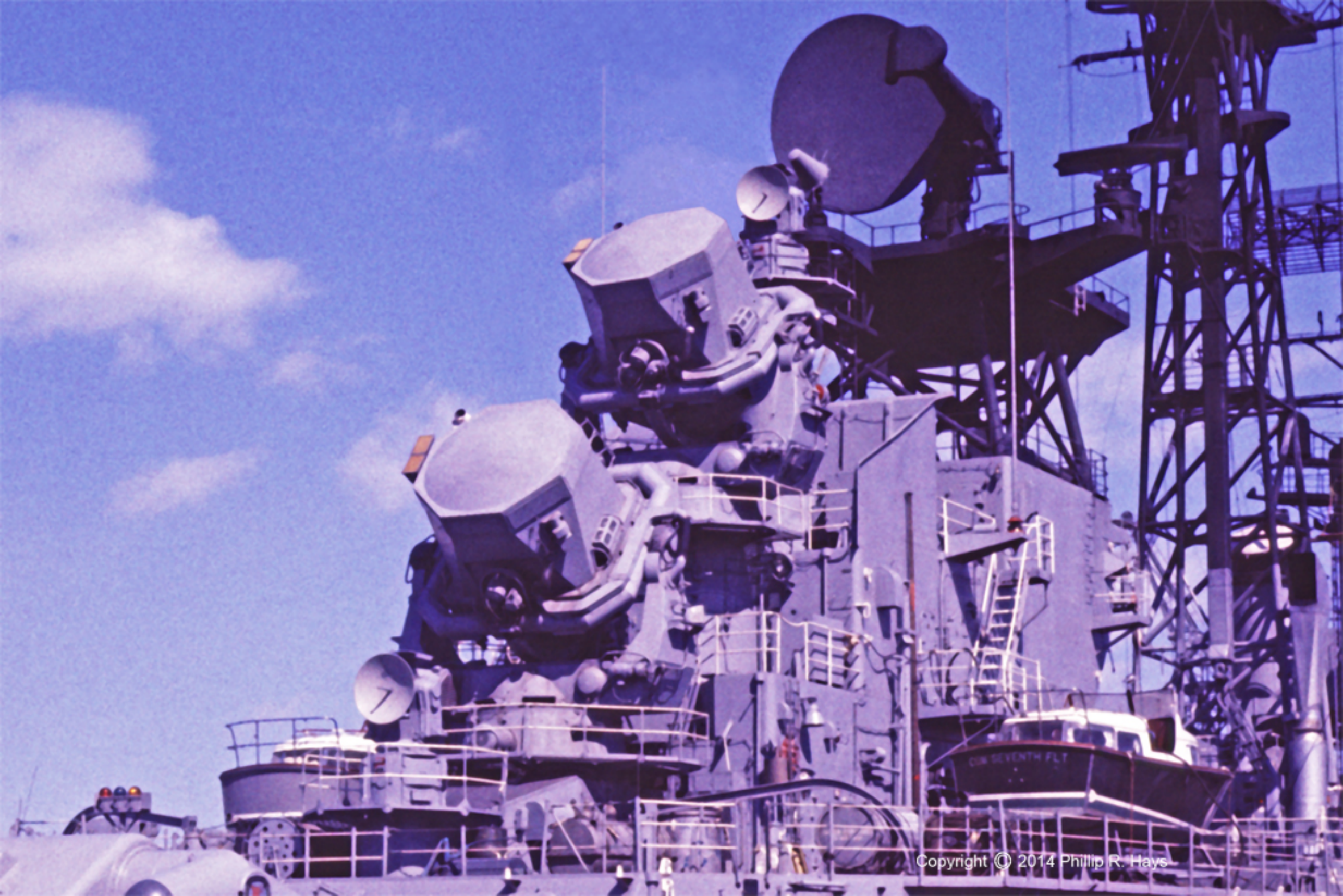
Copyright © 2014 Phillip R. Hays

CONSTANT FREQUENCY

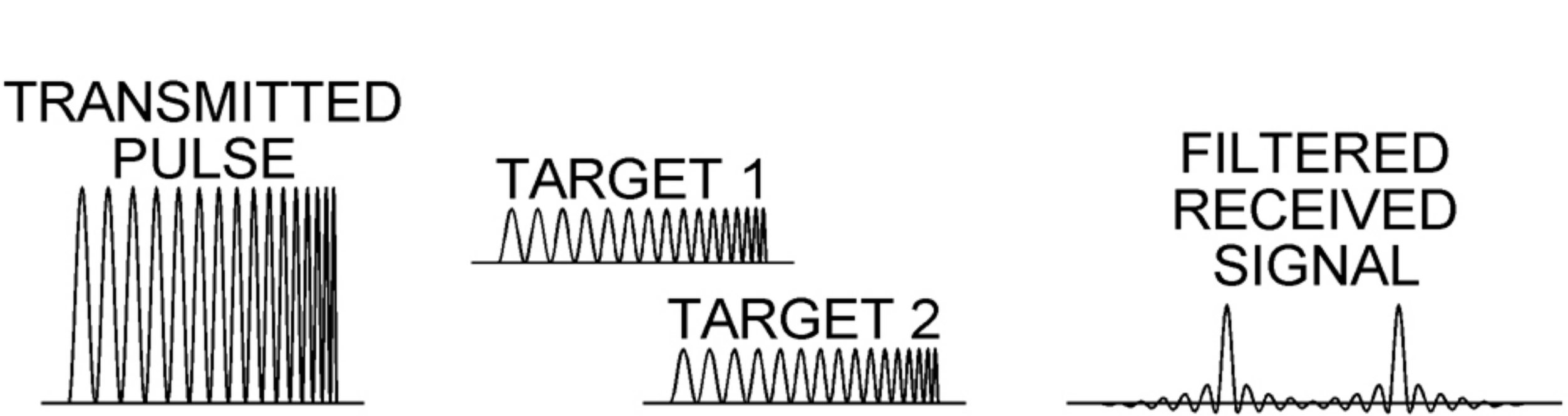

PULSE COMPRESSION

Copyright © 2014 Phillip R. Hays

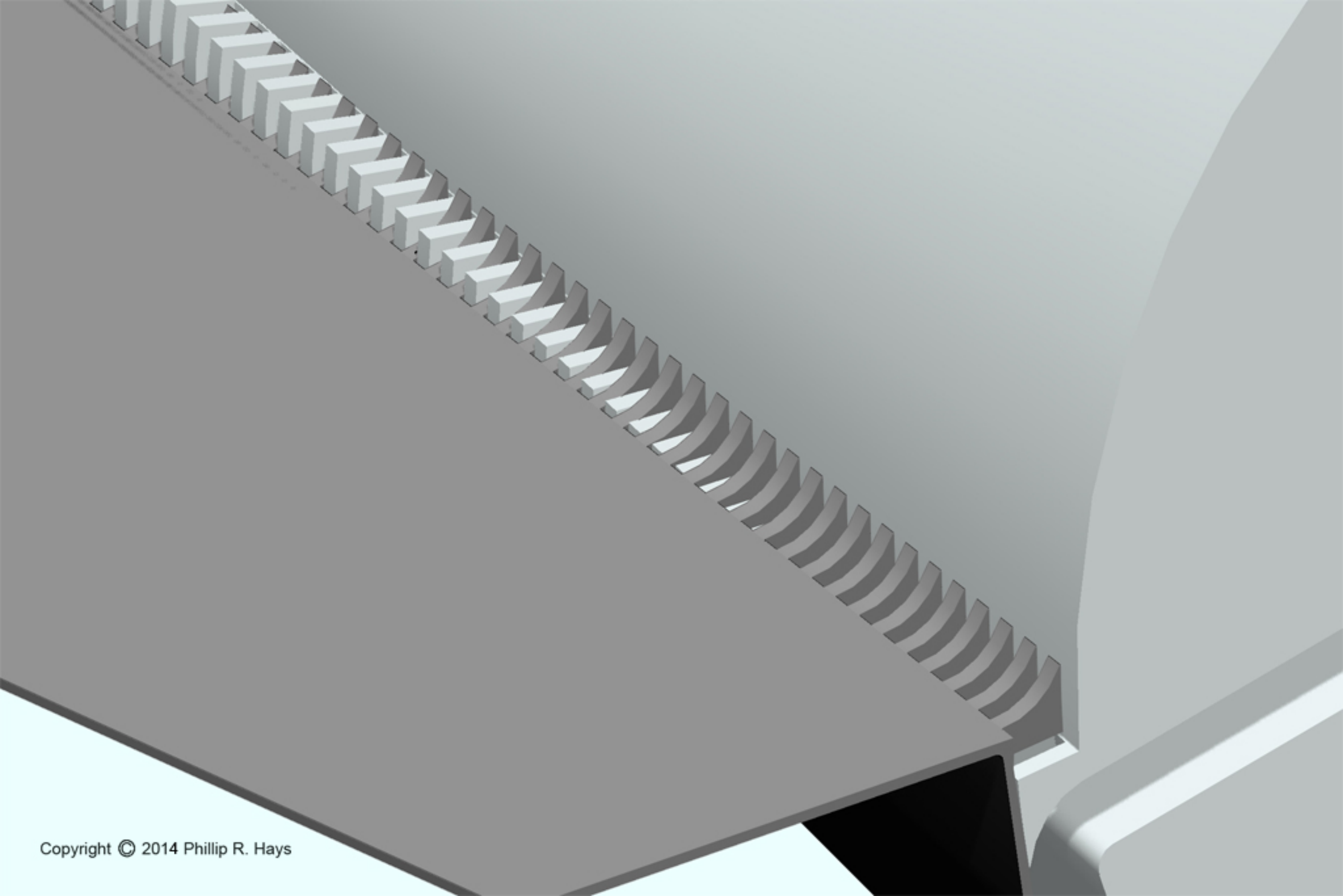

Copyright © 2014 Phillip R. Hays

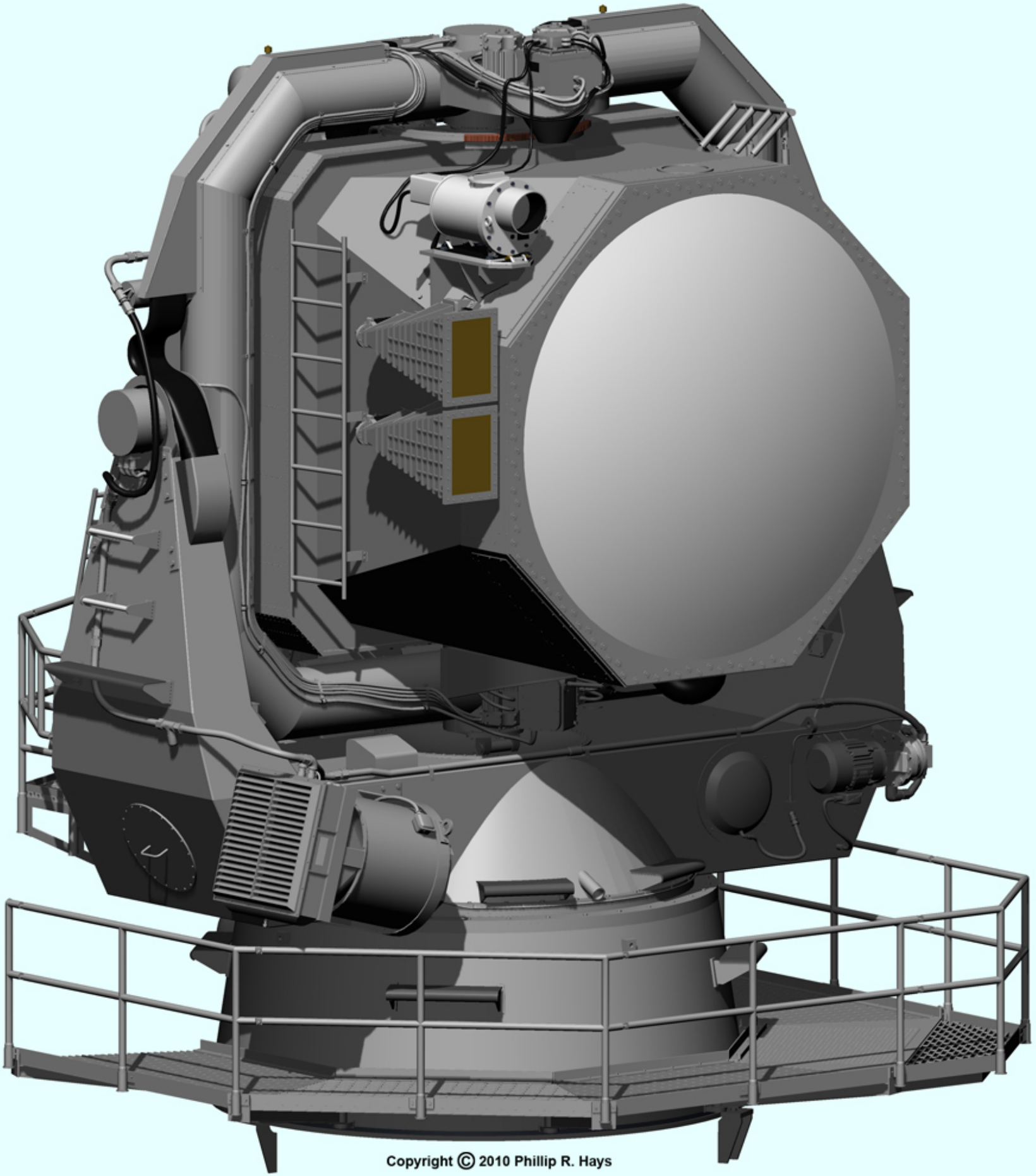

Copyright © 2010 Phillip R. Hays

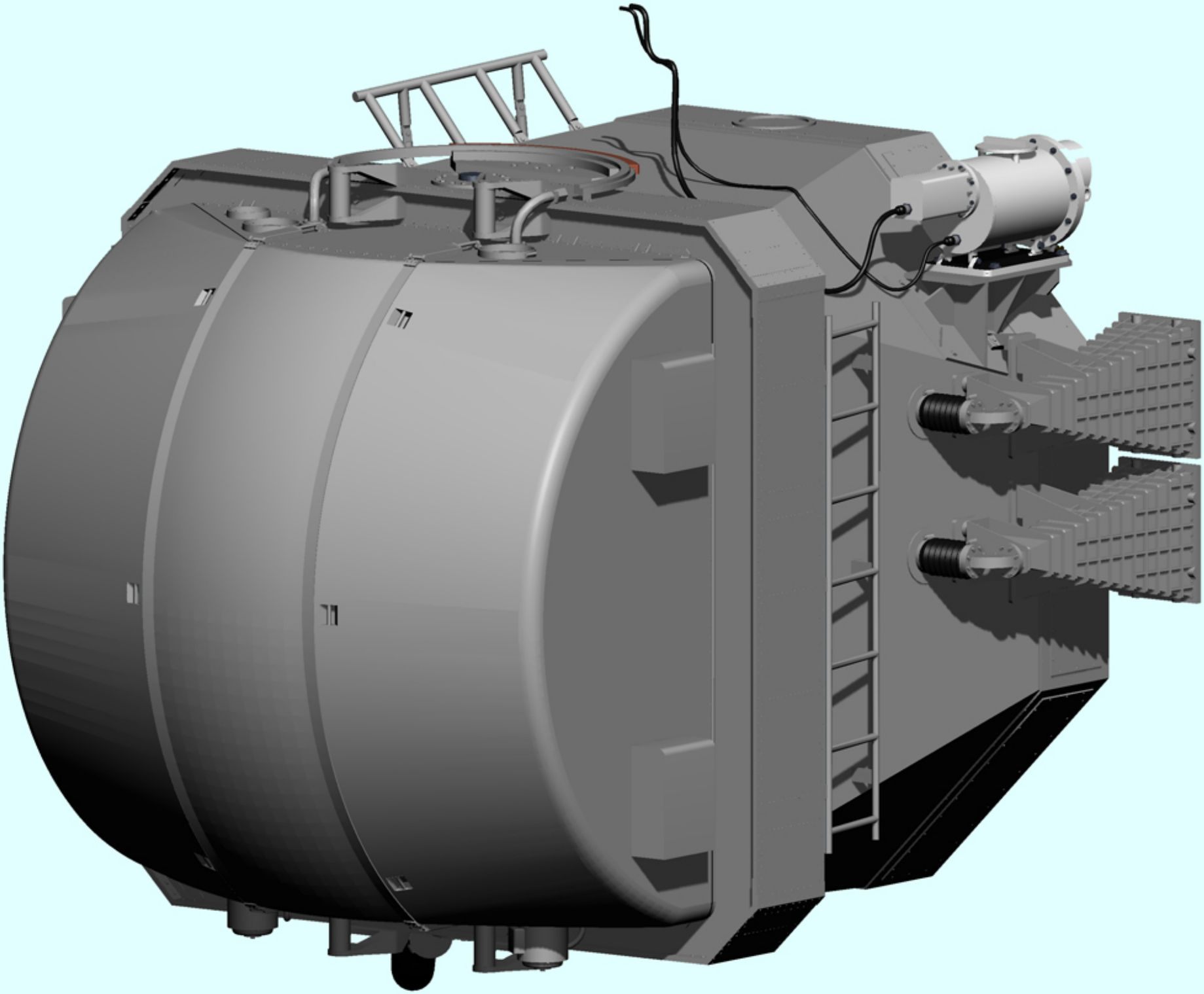

ANTENNA

Copyright © 2010 Phillip R. Hays

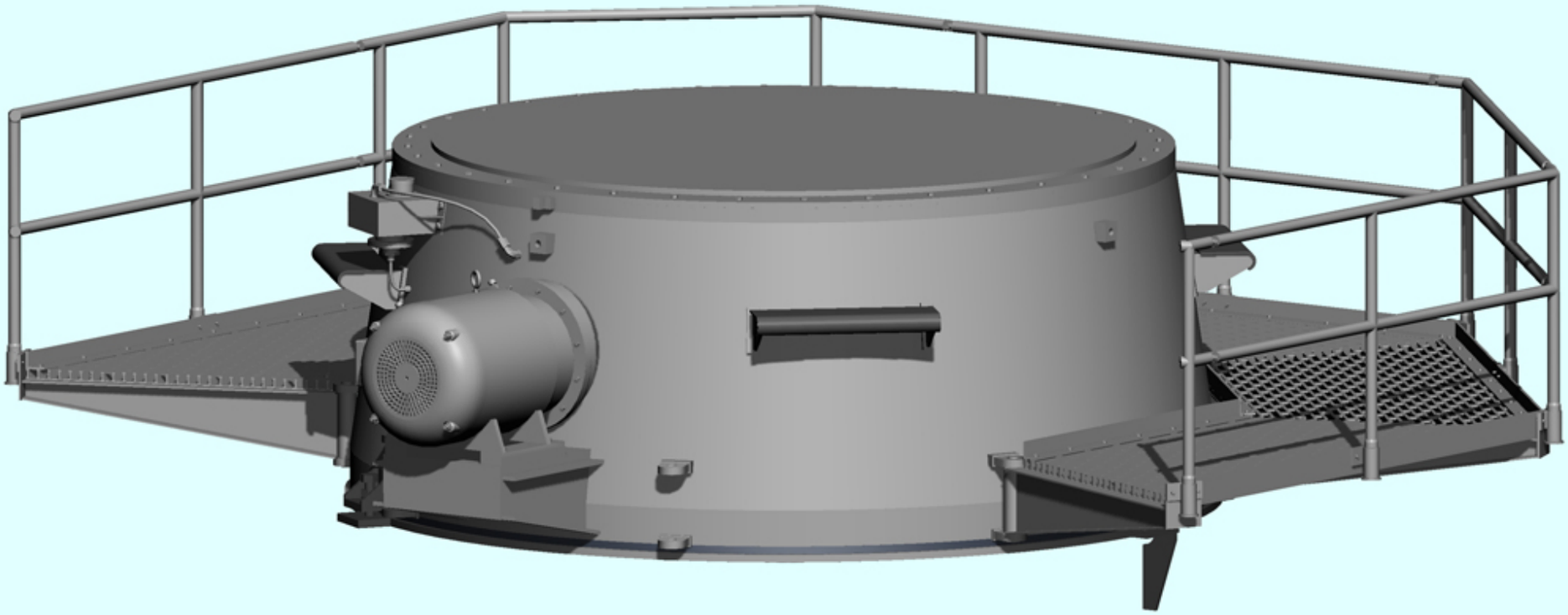

BASE

Copyright © 2010 Phillip R. Hays

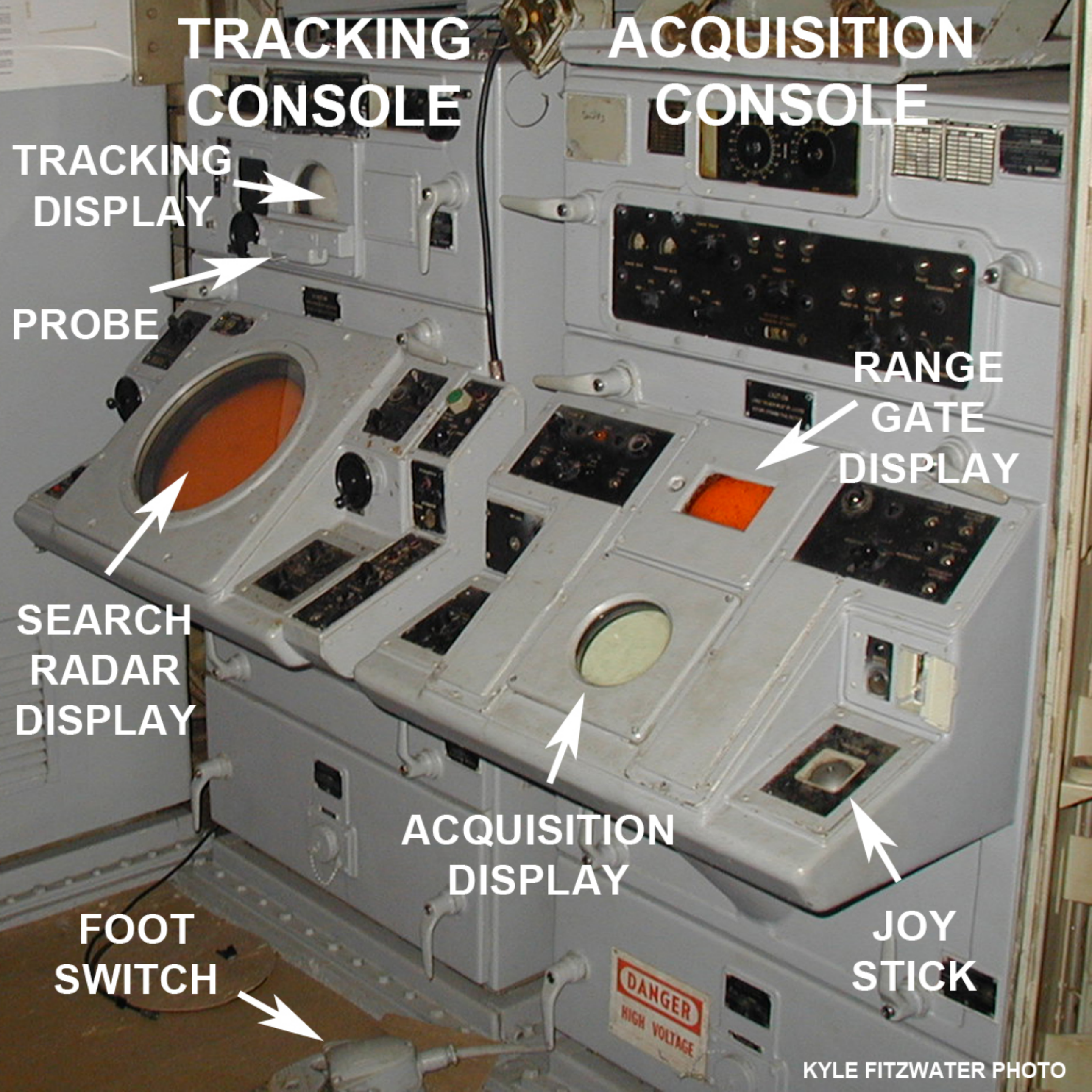
TRACKING CONSOLE
ACQUISITION CONSOLE
TRACKING DISPLAY
PROBE
RANGE GATE DISPLAY
SEARCH RADAR DISPLAY
ACQUISITION DISPLAY
JOY STICK
FOOT SWITCH
DANGER
HIGH VOLTAGE
KYLE FITZWATER PHOTO

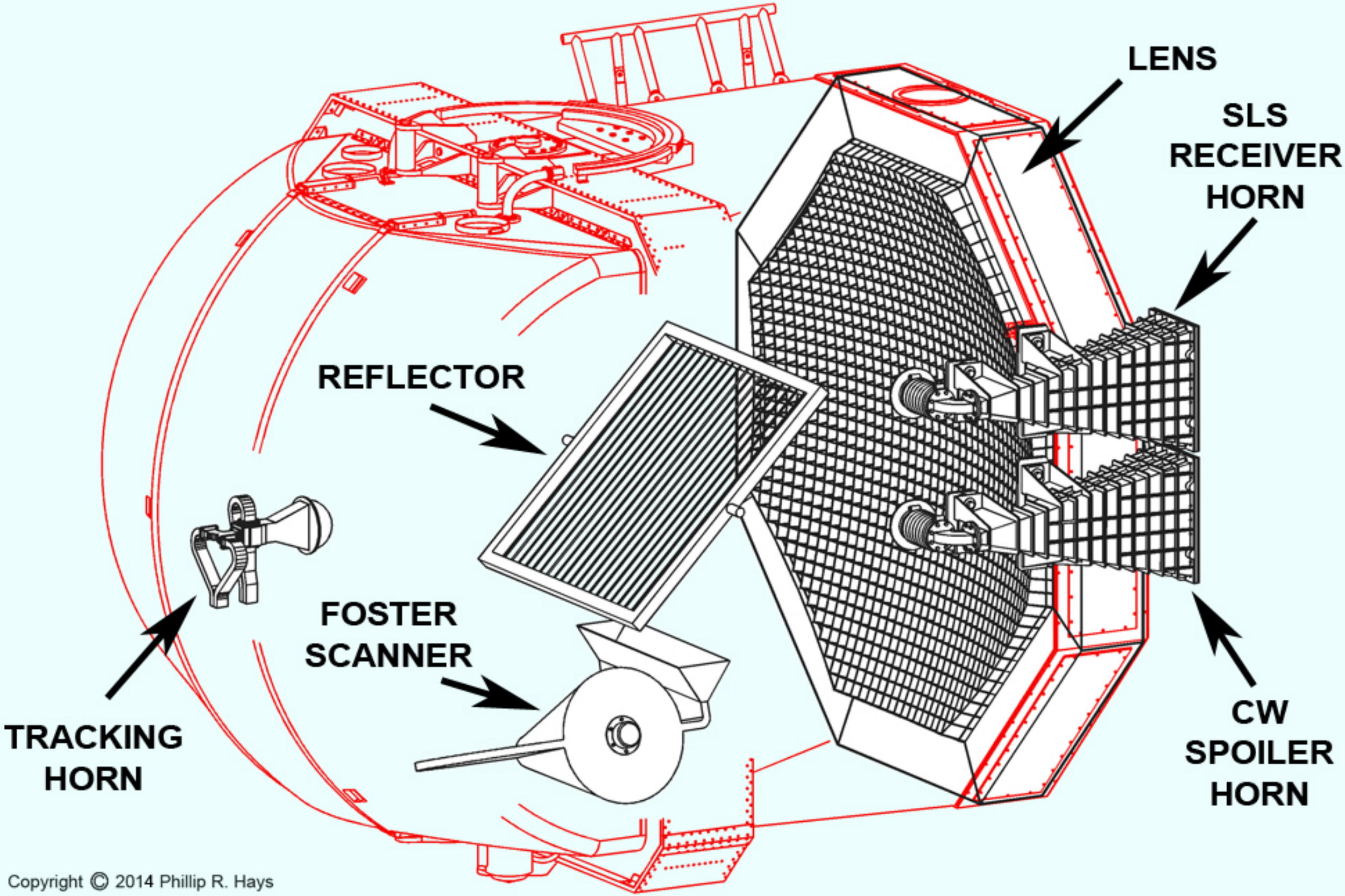

Copyright © 2014 Phillip R. Hays

GIMBAL

Copyright © 2010 Phillip R. Hays

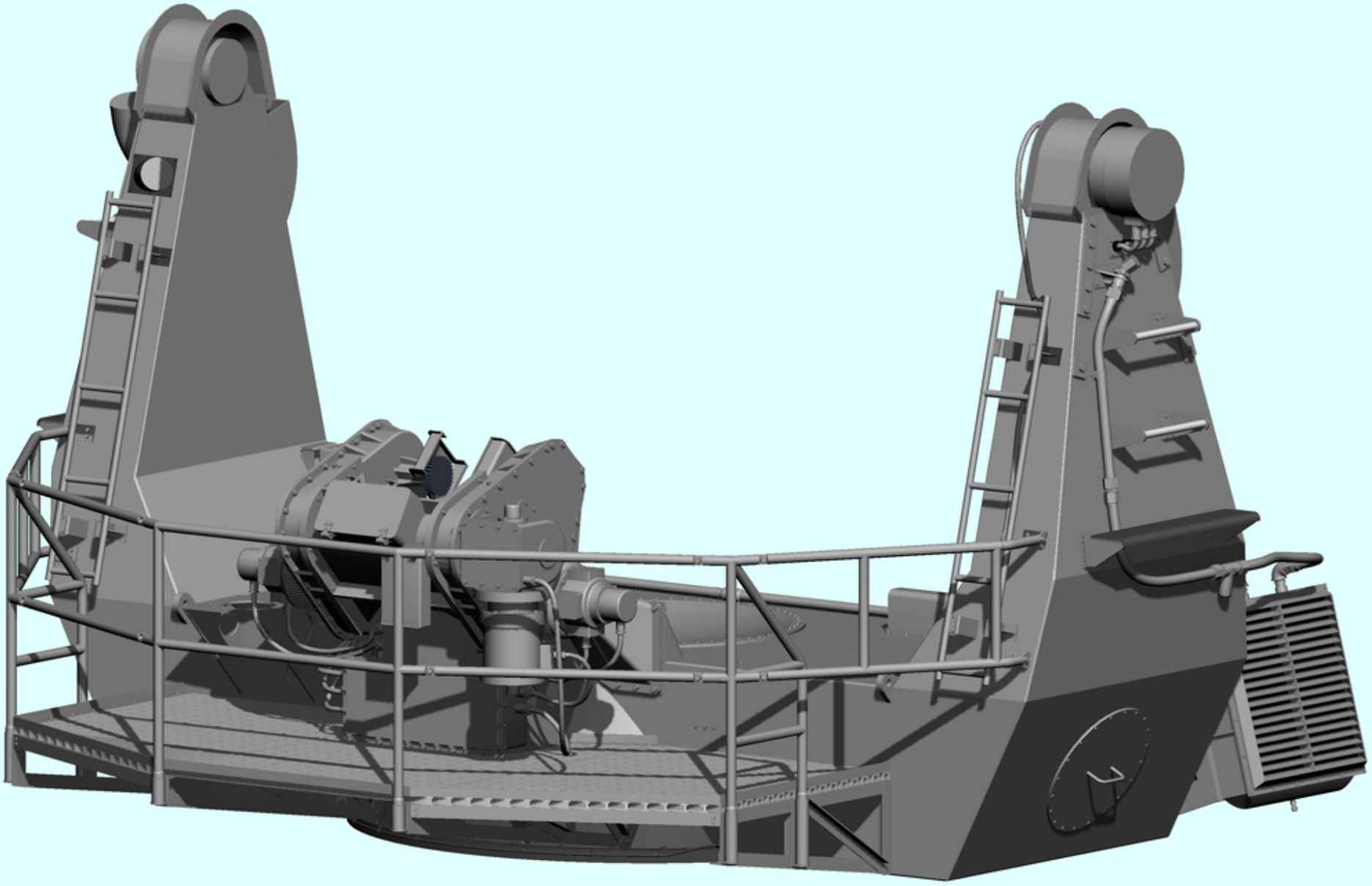

YOKE

Copyright © 2010 Phillip R. Hays

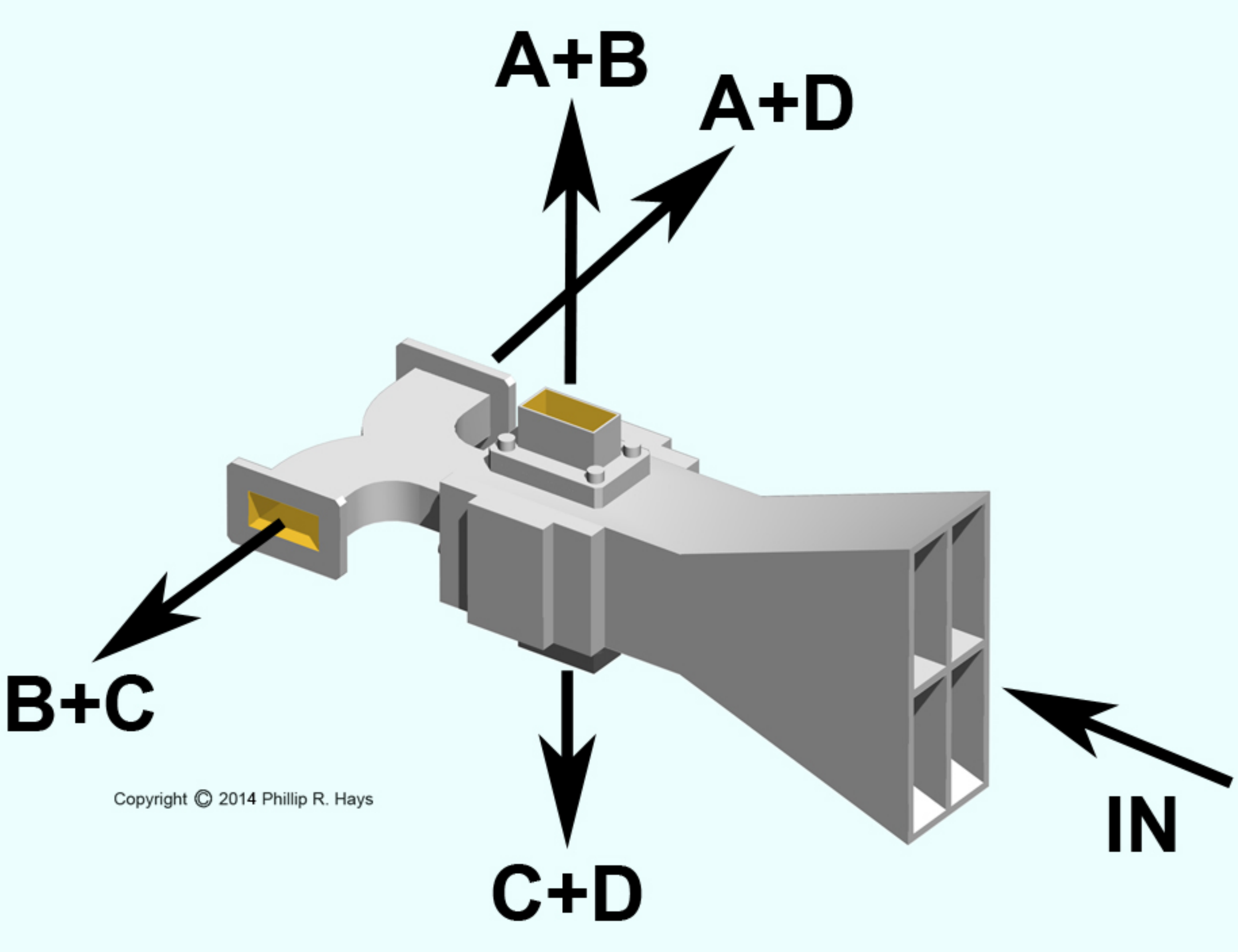

Copyright © 2014 Phillip R. Hays

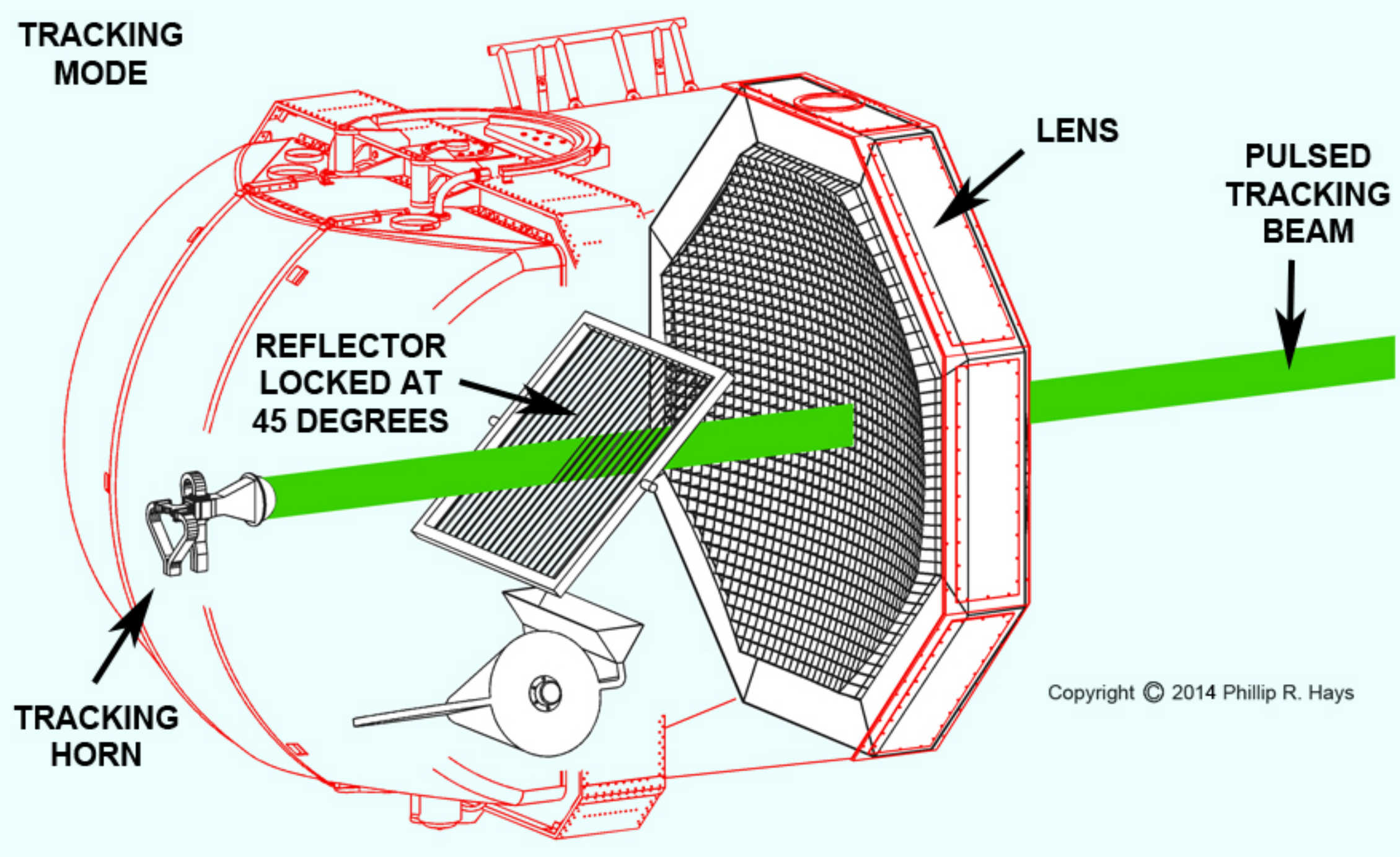
TRACKING MODE
LENS
PULSED TRACKING BEAM
REFLECTOR LOCKED AT 45 DEGREES
TRACKING HORN
Copyright © 2014 Phillip R. Hays

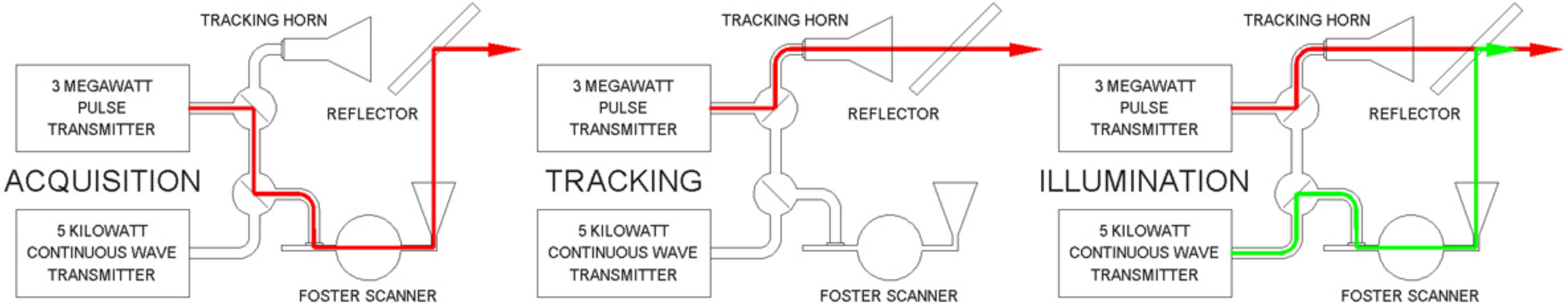

Copyright © 2014 Phillip R. Hays

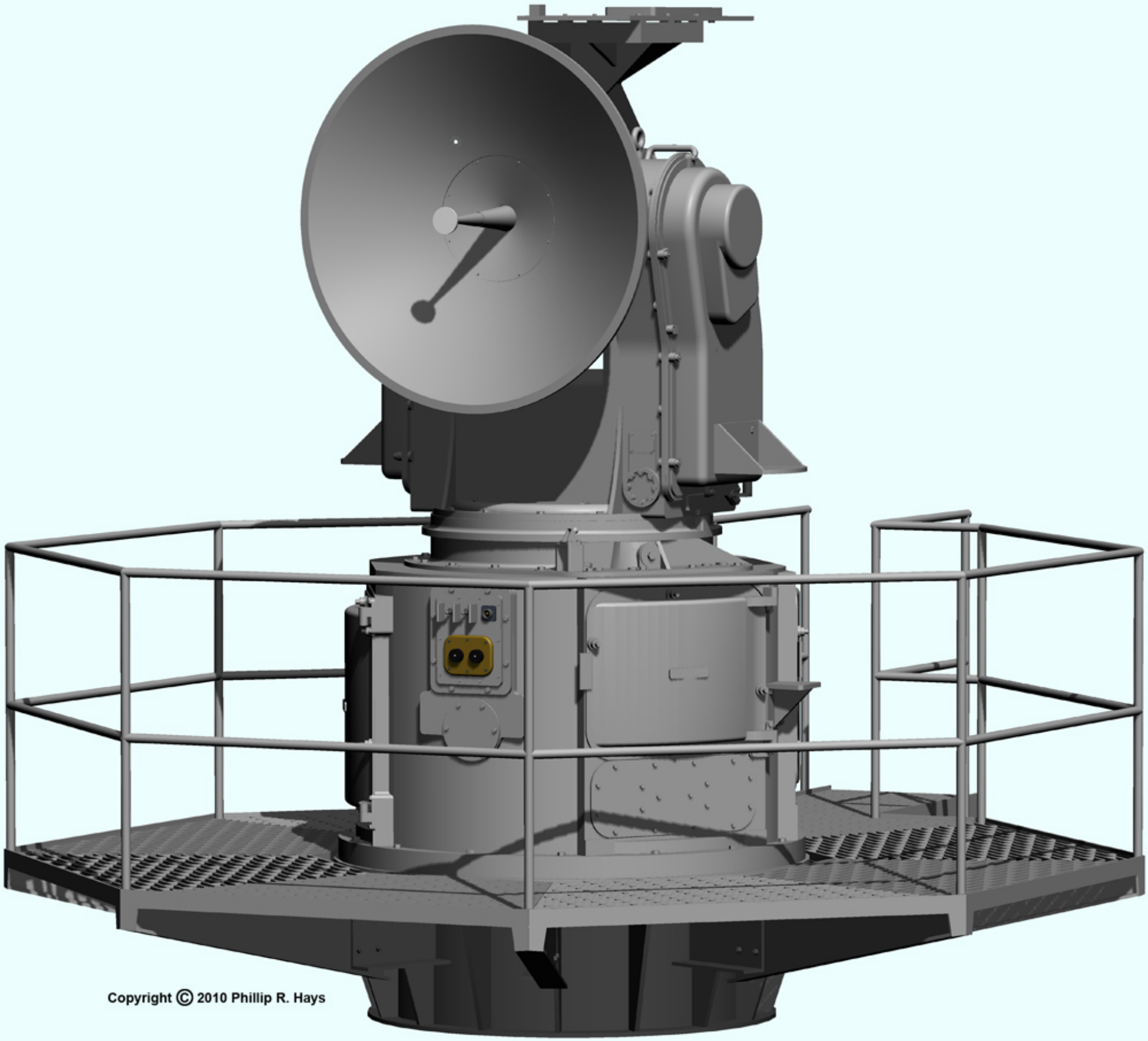

Copyright © 2010 Phillip R. Hays

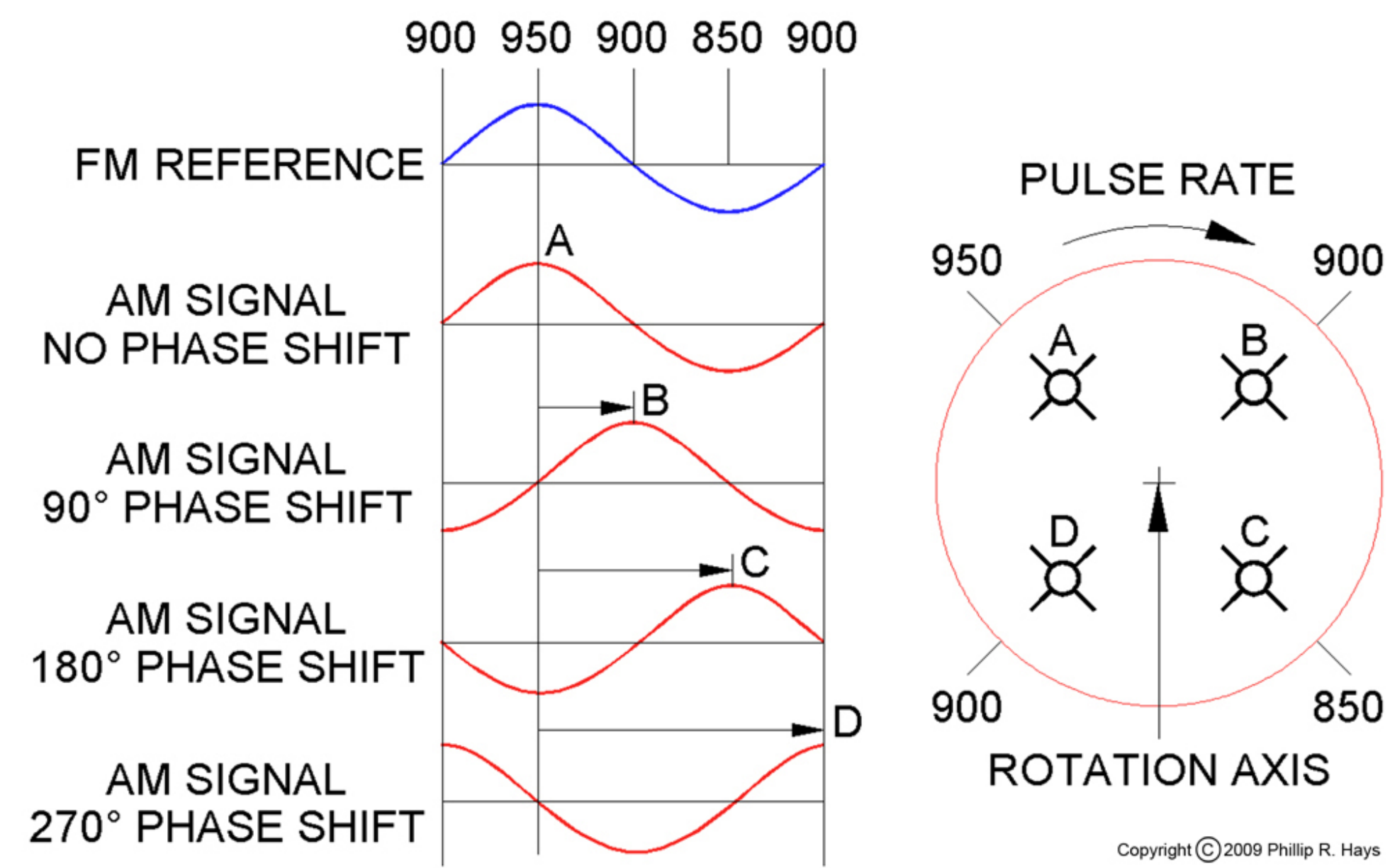

Copyright © 2009 Phillip R. Hays

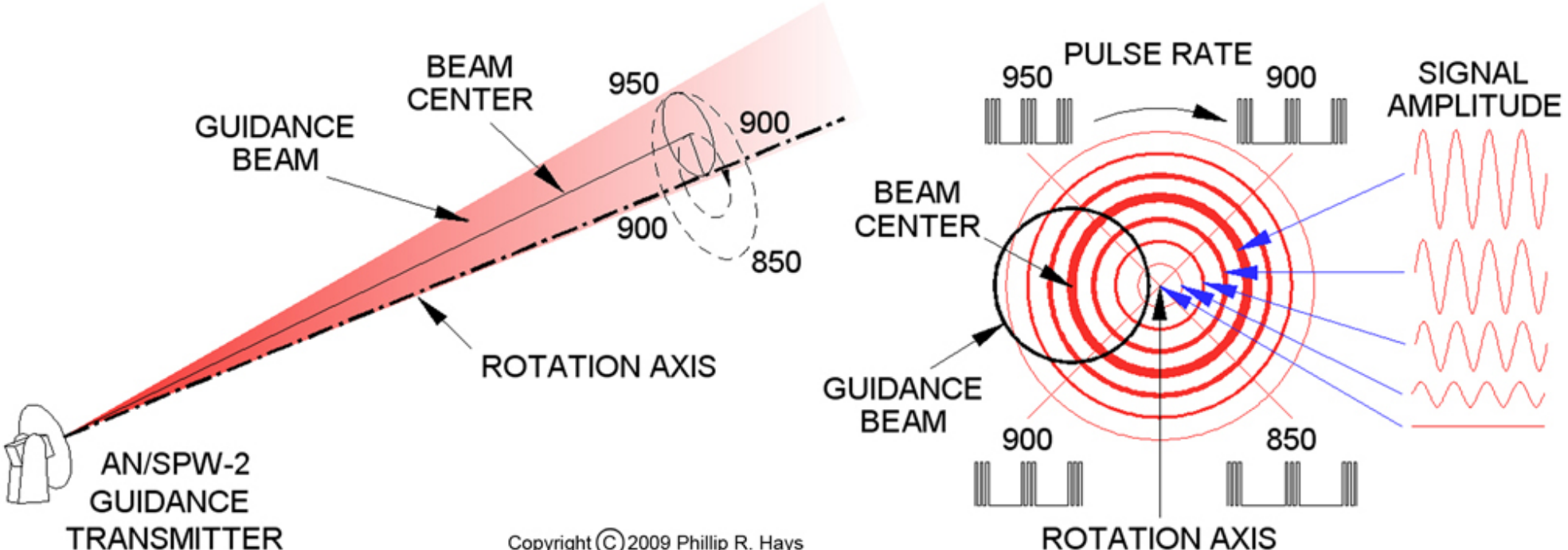

Copyright © 2009 Phillip R. Hays

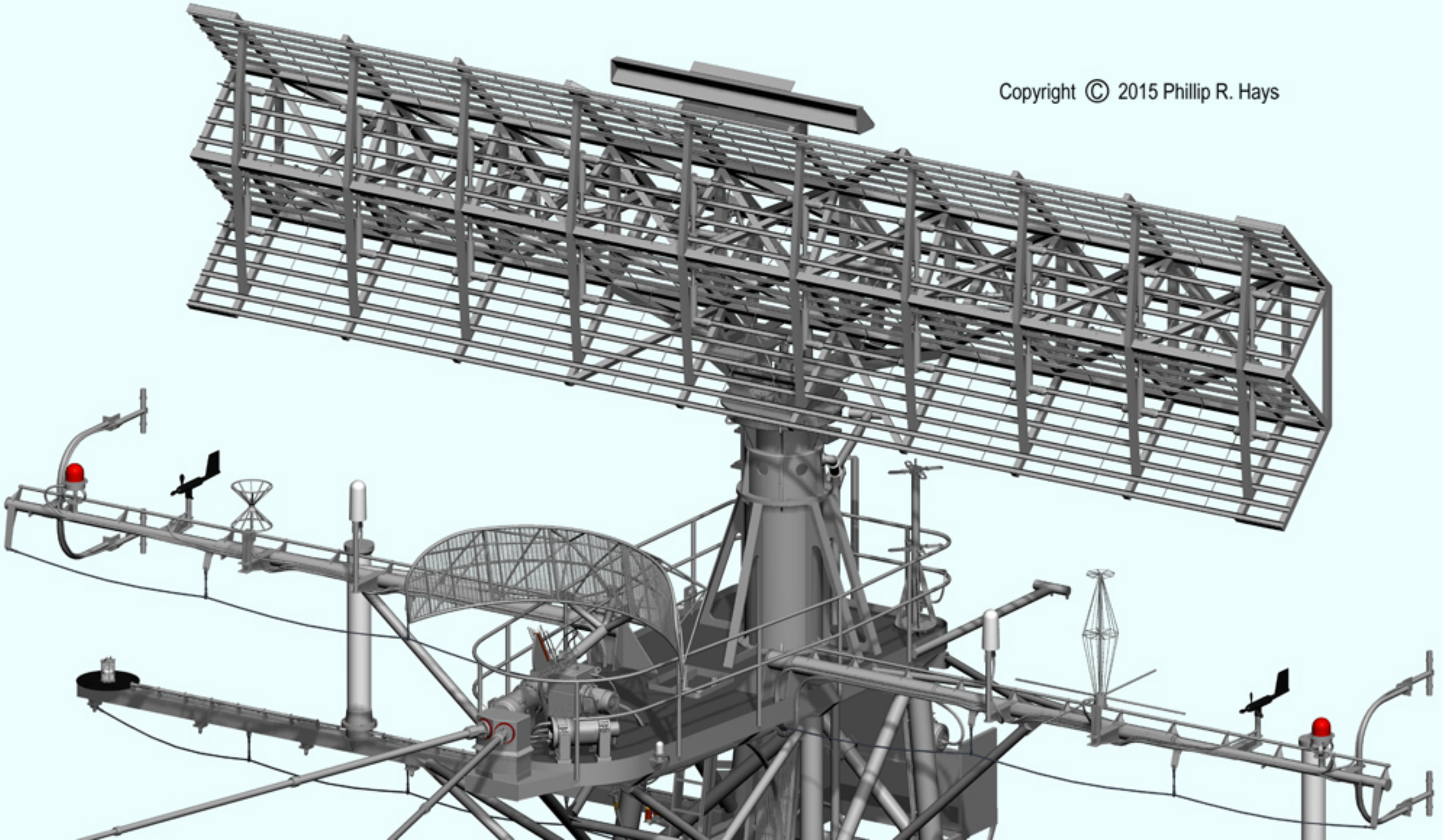
Copyright © 2015 Phillip R. Hays

Mk 77 GUIDED MISSILE FIRE CONTROL SYSTEM

AN/SPS-30

AN/SPS-10

AN/SPS-43

SPS-30 CONTROL ROOM

SPS-10 CONTROL ROOM

SPS-43 CONTROL ROOM

AN/SPG-49

SPG-49 CONTROL ROOM

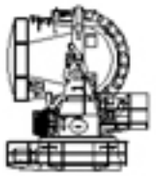

AN/SPG-49

SPG-49 CONTROL ROOM

AN/SPW-2

AN/SPW-2

SPW-2 CONTROL ROOM

MK 111 MISSILE FIRE CONTROL COMPUTER

WEAPONS CONTROL

COMBAT INFORMATION CENTER

PDP-8 COMPUTER

NAVSAT RECEIVER

AREA 1 WING AND FIN AREA

AREA 2 READY SERVICE MAGAZINE

MISSILE HOUSE

Mk 7 LAUNCHER

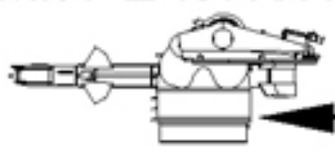

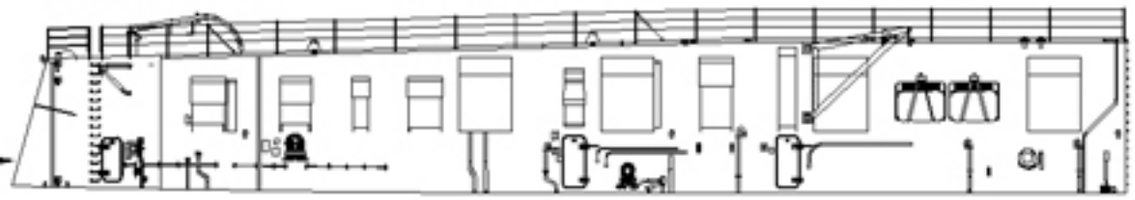

Mk 7 TALOS GUIDED MISSILE LAUNCHING SYSTEM

Copyright © 2014 Phillip R. Hays

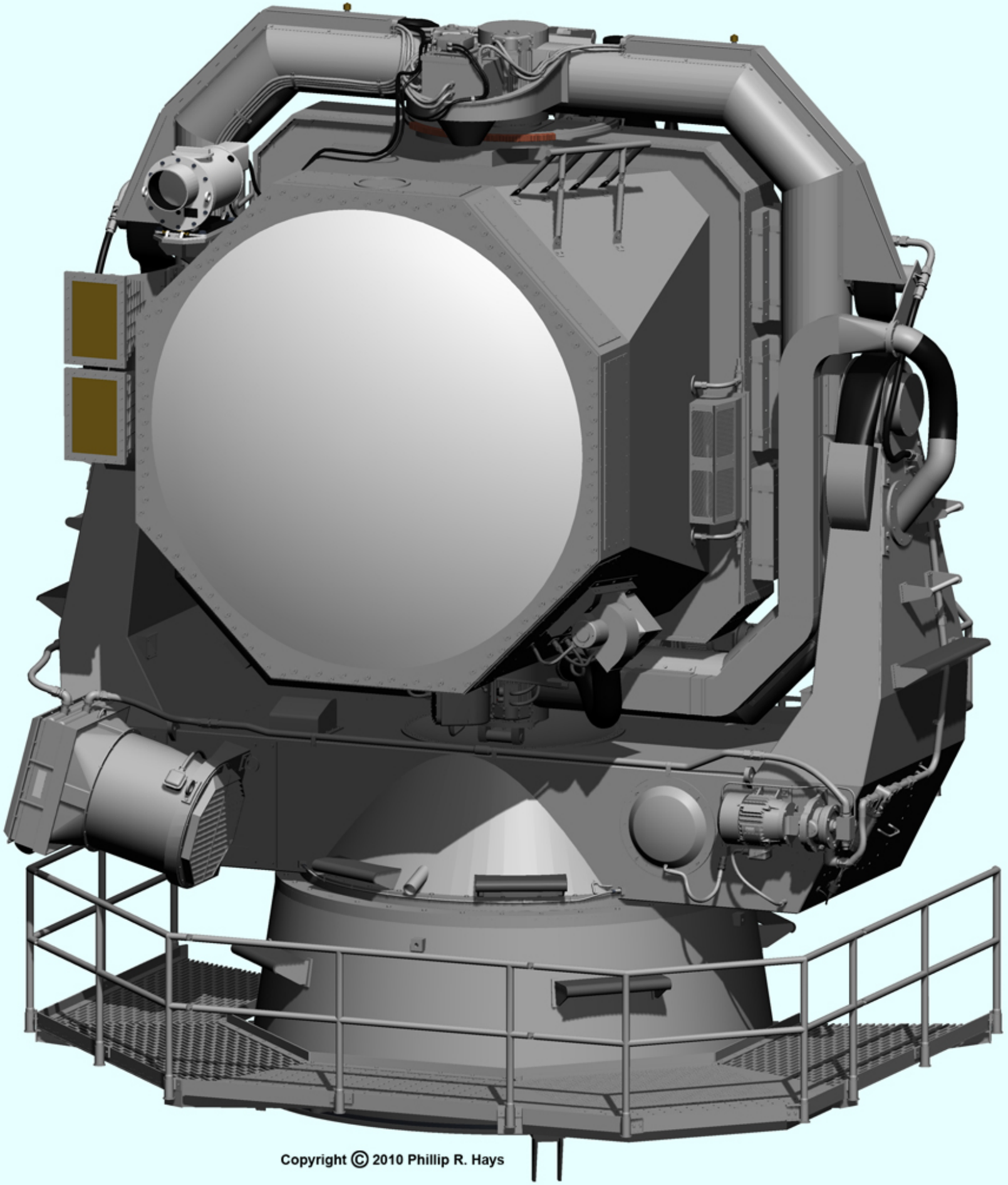

Copyright © 2010 Phillip R. Hays

Copyright © 2018 Phillip R. Hays

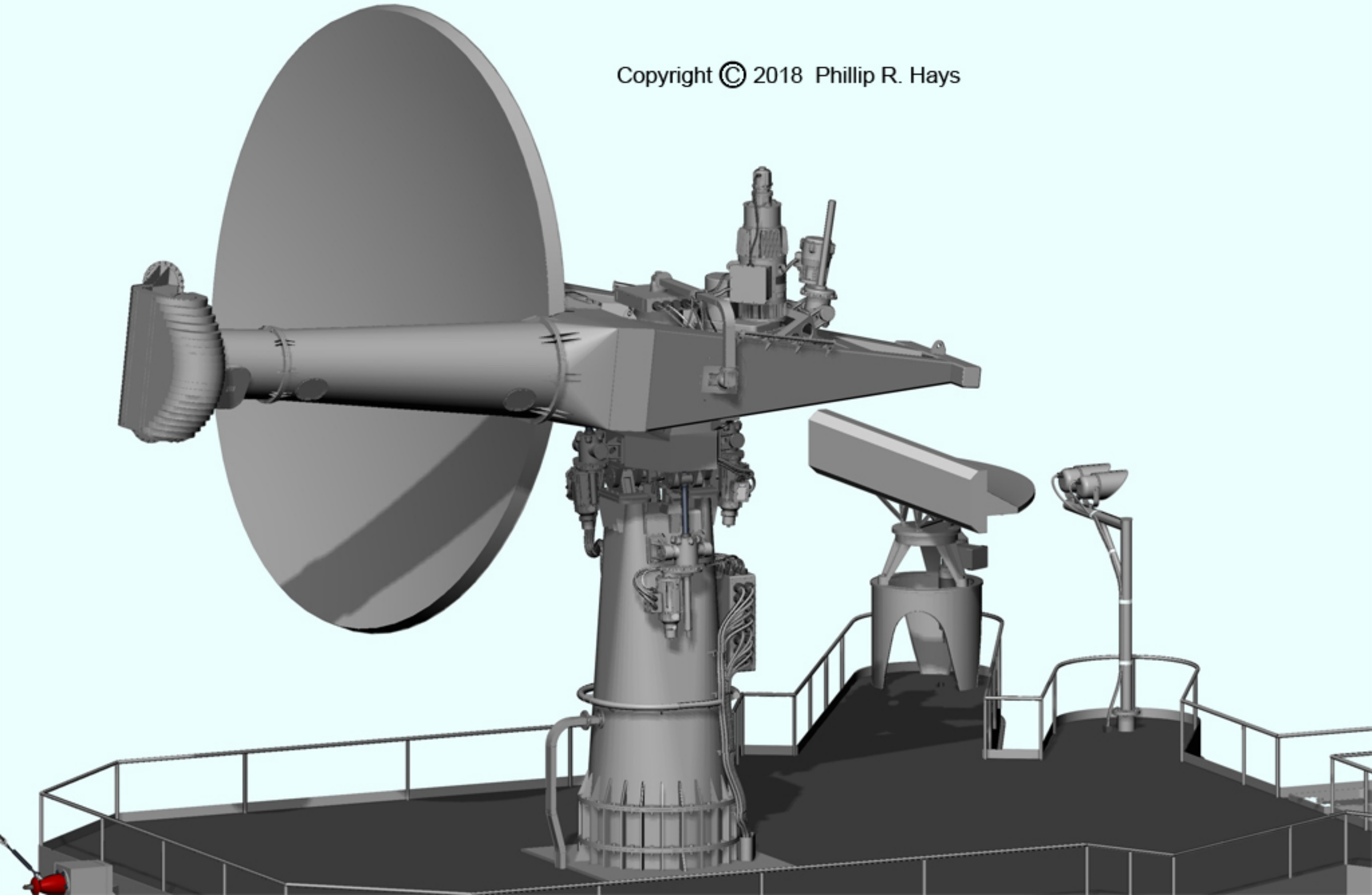

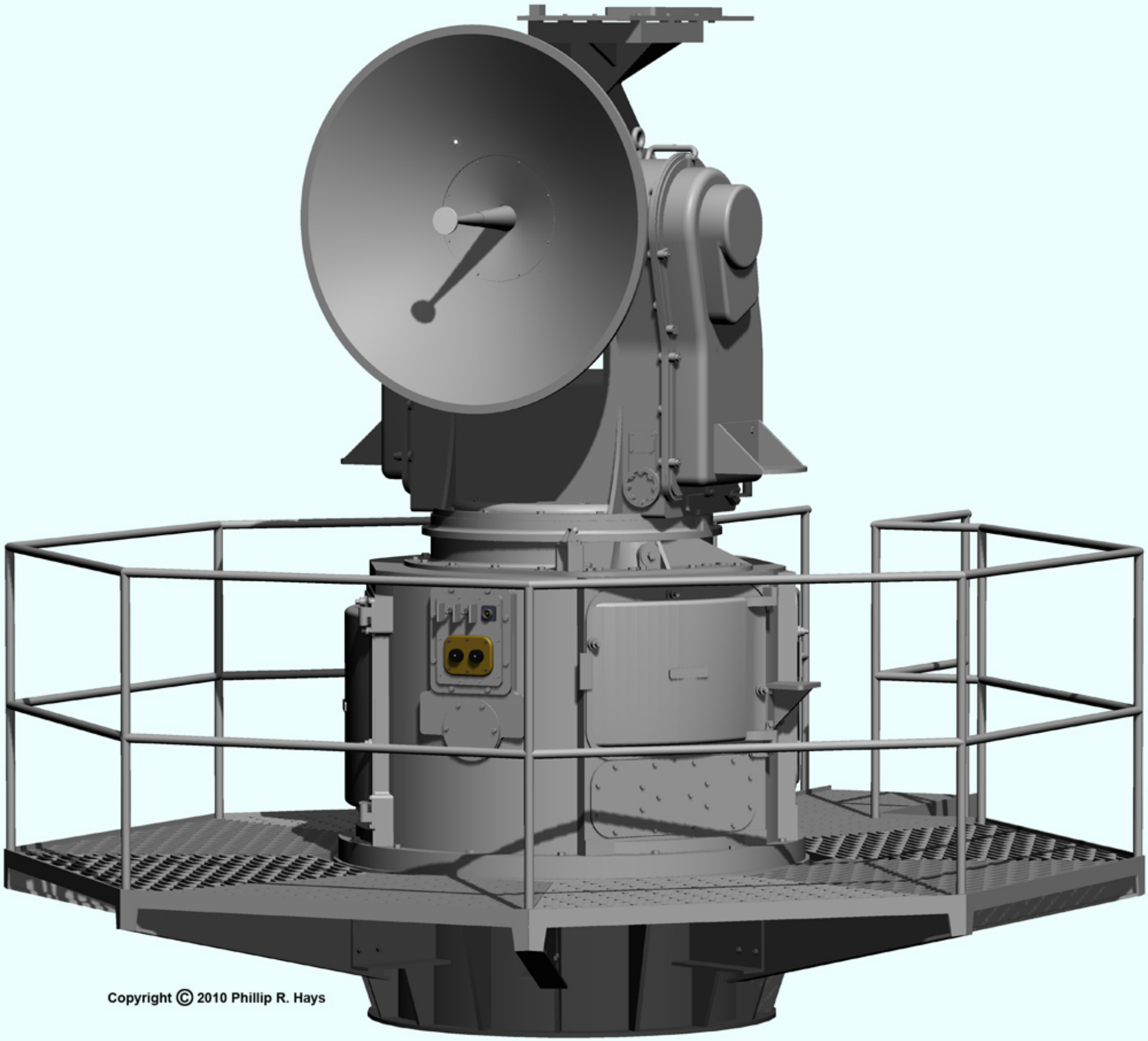

Copyright © 2010 Phillip R. Hays

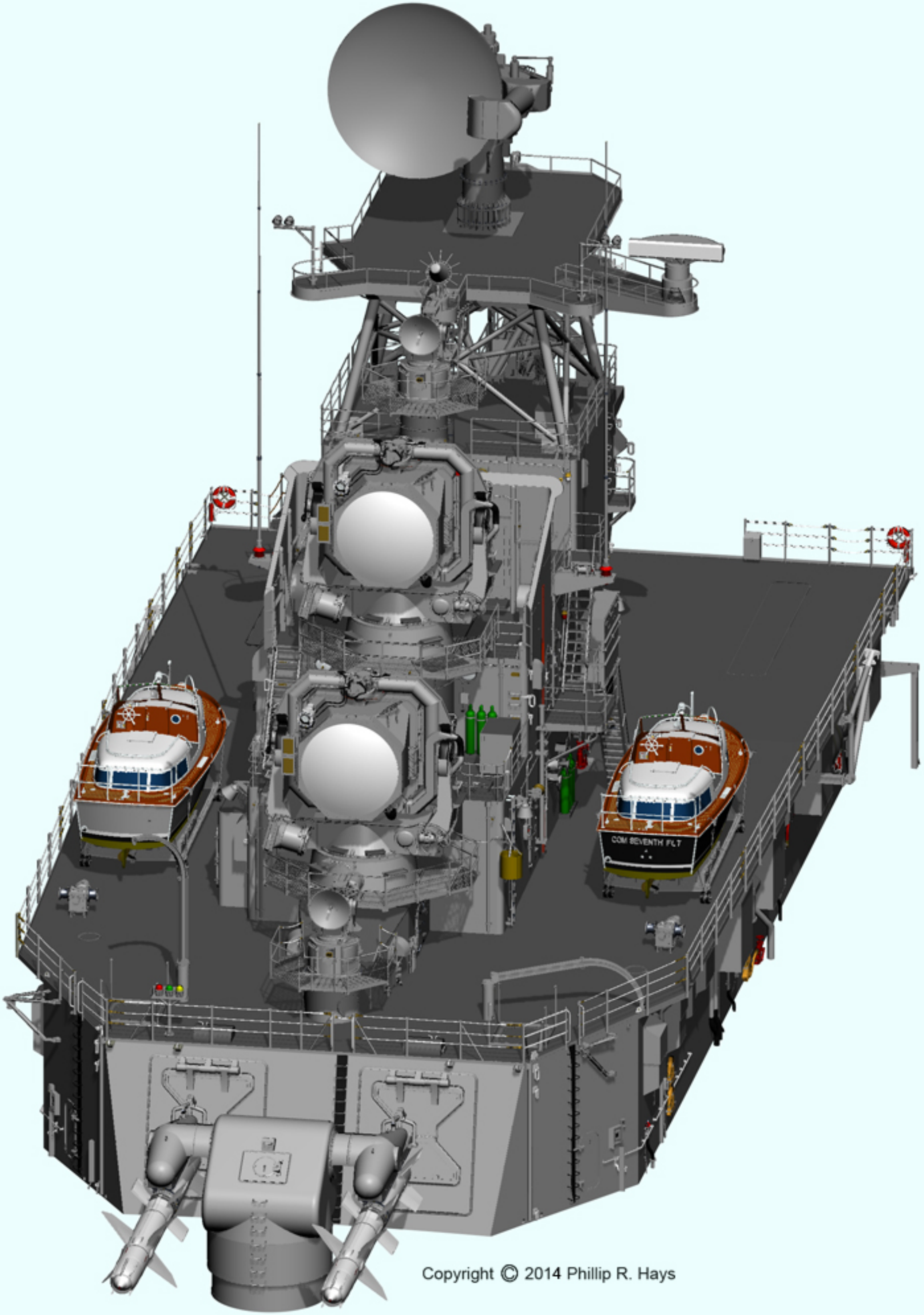

Copyright © 2014 Phillip R. Hays

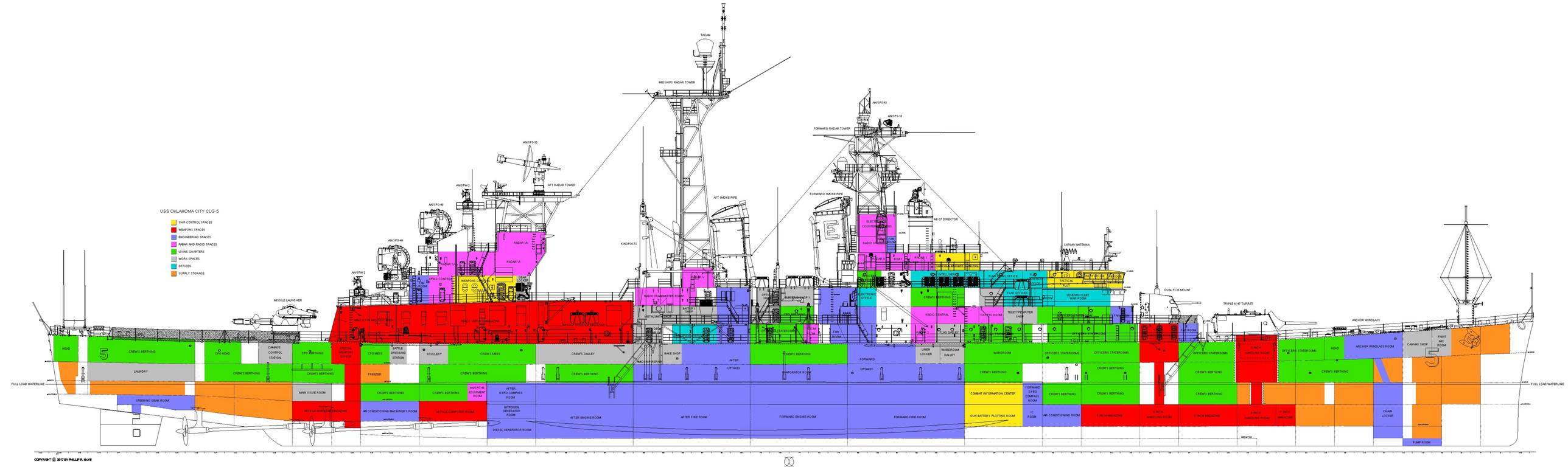
USS OKLAHOMA CITY CLG-5
SHIP CONTROL SPACES
WEAPONS SPACES
ENGINEERING SPACES
RADAR AND RADIO SPACES
LIVING QUARTERS
WORK SPACES
OFFICES
SUPPLY STORAGE
TACAN
MIDSHIPS RADAR TOWER
AN/SPS-30
AN/SPW-2
AN/SPS-40
AN/SPG-49
AN/SPW-2
AFT RADAR TOWER
AFT SMOKE PIPE
KINGPOSTS
AN/SPS-43
AN/SPS-10
FORWARD RADAR TOWER
FORWARD SMOKE PIPE
MK-37 DIRECTOR
SATNAV ANTENNA
DUAL 5"/38 MOUNT
TRIPLE 6"/47 TURRET
ANCHOR WINDLASS
MISSILE LAUNCHER
RADAR VI
RADAR V
RADAR I
RADAR II
RADAR III
RADAR IV
HEAD
CREW'S BERTHING
CPO HEAD
DANCE CONTROL STATION
CPO BERTHING
CREW'S BERTHING
LAUNDRY
CREW'S BERTHING
CREW'S BERTHING
STEERING GEAR ROOM
MAN ISSUE ROOM
MISSILE WARHEAD MAGAZINE
MISSILE FIRE AND CONTROL SERVICE
RADIO SERVICE MAGAZINE
BATTLE STORES MAGAZINE
CREW'S MESS
CREW'S GALLEY
CREW'S BERTHING
CREW'S BERTHING
CREW'S BERTHING
AIR CONDITIONING MACHINERY ROOM
MISSILE COMPUTER ROOM
AN/SPG-49 EQUIPMENT ROOM
AFTER GYRO COMPASS ROOM
NITROGEN GENERATOR ROOM
DIESEL GENERATOR ROOM
AFTER ENGINE ROOM
AFTER FIRE ROOM
AFTER UPTAKES
FORWARD UPTAKES
EVAPORATOR ROOM
FORWARD ENGINE ROOM
FORWARD FIRE ROOM
CREW'S BERTHING
LINEN LOCKER
WARDROOM GALLEY
WARDROOM
COMBAT INFORMATION CENTER
GUN BATTERY PLOTTING ROOM
FORWARD GYRO COMPASS ROOM
IC ROOM
AIR CONDITIONING ROOM
CREW'S BERTHING
CREW'S BERTHING
CREW'S BERTHING
OFFICERS' STATEROOMS
OFFICERS' STATEROOMS
OFFICERS' STATEROOMS

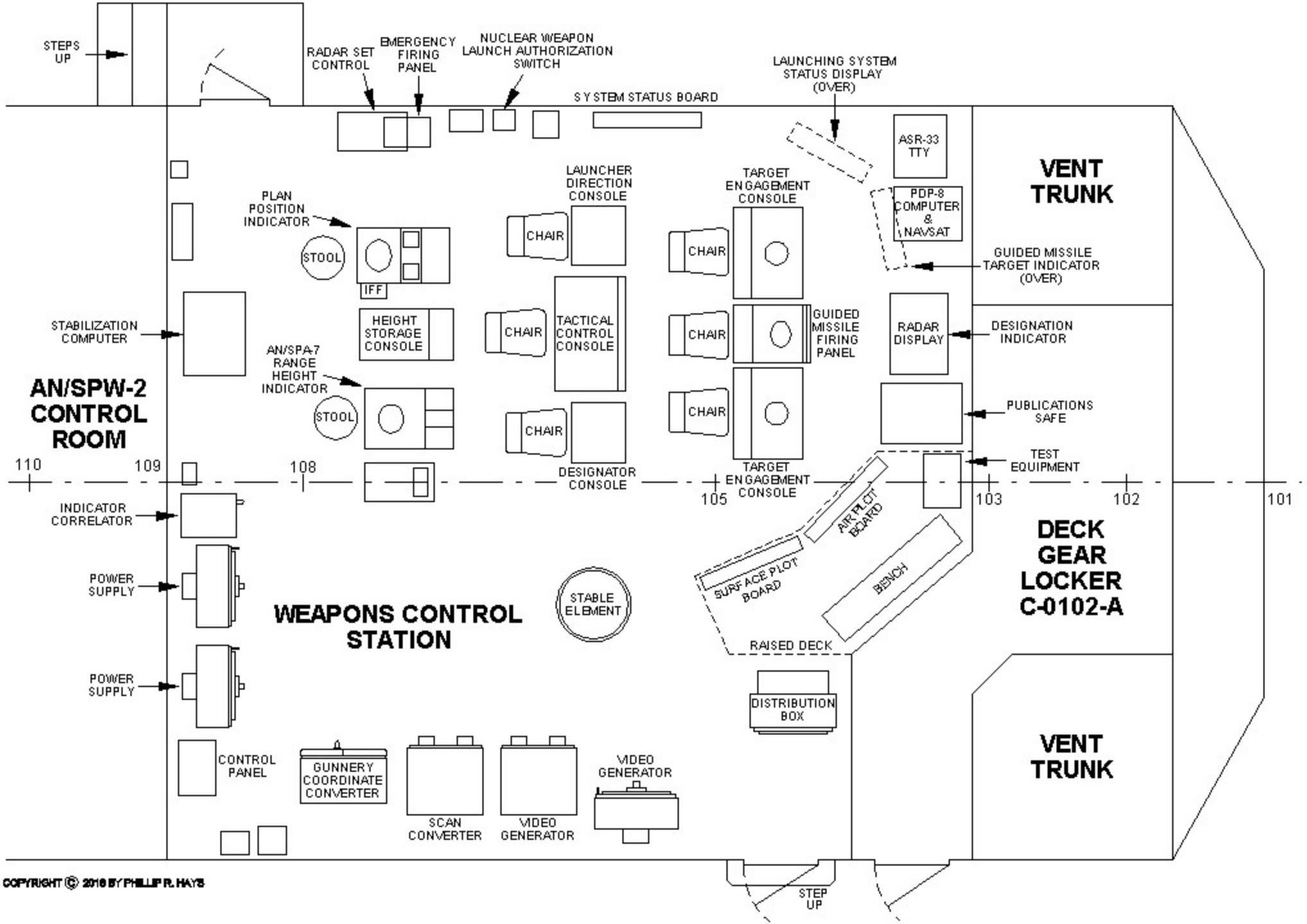

COPYRIGHT © 2016 BY PHILLIP R. HAYS